US008664497B2

(12) **United States Patent**
Taylor

(10) **Patent No.: US 8,664,497 B2**
(45) **Date of Patent: Mar. 4, 2014**

(54) **DOUBLE KEYBOARD PIANO SYSTEM**

(75) Inventor: **Christopher Taylor**, Middleton, WI (US)

(73) Assignee: **Wisconsin Alumni Research Foundation**, Madison, WI (US)

(*) Notice: Subject to any disclaimer, the term of this patent is extended or adjusted under 35 U.S.C. 154(b) by 218 days.

(21) Appl. No.: **13/301,974**

(22) Filed: **Nov. 22, 2011**

(65) **Prior Publication Data**

US 2013/0125727 A1 May 23, 2013

(51) **Int. Cl.**
G10H 3/00 (2006.01)

(52) **U.S. Cl.**
USPC **84/2**; 84/3; 84/170; 84/615; 84/653

(58) **Field of Classification Search**
USPC 84/2–23, 170–172, 615, 653
See application file for complete search history.

(56) **References Cited**

U.S. PATENT DOCUMENTS

1,613,400	A	*	1/1927	McAleavey	84/477 R
2,784,633	A	*	3/1957	Hess	84/171
3,749,807	A		7/1973	Adachi	
3,825,668	A		7/1974	Okamoto	
3,886,834	A		6/1975	Okamoto	
4,223,584	A		9/1980	Nakada et al.	
4,226,154	A	*	10/1980	Easler	84/686
4,592,262	A		6/1986	Yang	
4,744,281	A	*	5/1988	Isozaki	84/602
4,939,969	A	*	7/1990	Taguchi et al.	84/719
5,507,215	A	*	4/1996	Lin	84/423 R
5,565,635	A	*	10/1996	Kaneko et al.	84/20
5,637,822	A	*	6/1997	Utsumi et al.	84/645
6,069,310	A	*	5/2000	James	84/645
6,288,317	B1	*	9/2001	Willis	84/600
6,689,947	B2		2/2004	Ludwig	
6,751,439	B2	*	6/2004	Tice et al.	434/350
6,921,856	B2	*	7/2005	Koseki	84/603
7,355,109	B2	*	4/2008	Muramatsu et al.	84/13
7,390,958	B2	*	6/2008	Knudsen	84/645
7,405,355	B2	*	7/2008	Both et al.	84/645
7,453,039	B2	*	11/2008	Ramstein	84/645
7,501,568	B2	*	3/2009	Uehara	84/600
7,742,832	B1	*	6/2010	Feldman et al.	700/94
7,767,901	B2	*	8/2010	Contois et al.	84/645
7,820,902	B2	*	10/2010	Furukawa et al.	84/609
7,947,889	B2	*	5/2011	Usa et al.	84/615
2001/0007219	A1	*	7/2001	Uehara et al.	84/609
2001/0007220	A1		7/2001	Koseki et al.	

(Continued)

OTHER PUBLICATIONS

Barron, Let's Play Two: Singular Piano, The New York Times, Jul. 15, 2007.

Primary Examiner — David S. Warren
(74) *Attorney, Agent, or Firm* — Bell & Manning, LLC

(57) **ABSTRACT**

A double keyboard piano system is provided. The double keyboard piano system may include a first automatic player piano, a second automatic player piano, and a double keyboard console including a first keyboard and a second keyboard mounted above the first keyboard. The first automatic player piano is in communication with the double keyboard console to receive a first signal including first information describing a first key for the first automatic player piano to automatically play based on a first key of the first keyboard being played, and the second automatic player piano is in communication with the double keyboard console to receive a second signal including second information describing a second key for the second automatic player piano to automatically play based on a second key of the second keyboard being played.

20 Claims, 18 Drawing Sheets

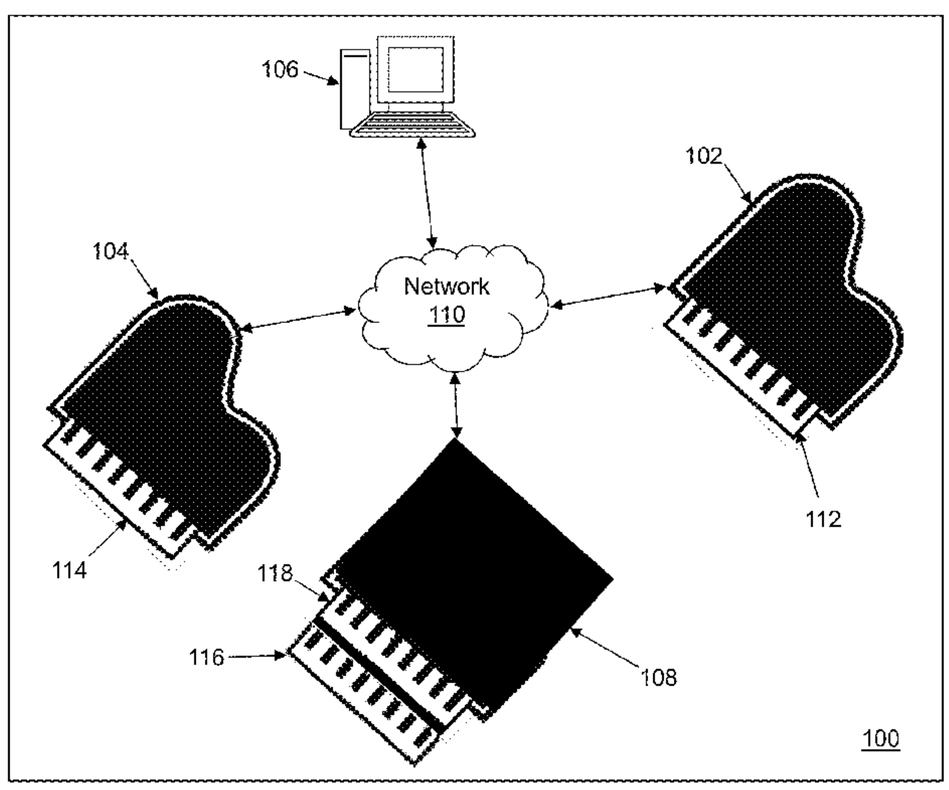

(56) **References Cited**

U.S. PATENT DOCUMENTS

2002/0046269	A1*	4/2002	James	709/223
2005/0005761	A1*	1/2005	Knudsen	84/645
2005/0235801	A1*	10/2005	Muramatsu et al.	84/13
2008/0041217	A1*	2/2008	Knudsen	84/464 R
2009/0084248	A1*	4/2009	Furukawa et al.	84/609
2009/0100979	A1*	4/2009	Furukawa et al.	84/13
2009/0282962	A1	11/2009	Jones et al.	
2010/0043619	A1*	2/2010	Stahnke	84/21
2010/0269665	A1	10/2010	Jones et al.	
2010/0326260	A1	12/2010	Komatsu et al.	
2013/0125727	A1*	5/2013	Taylor	84/21

* cited by examiner

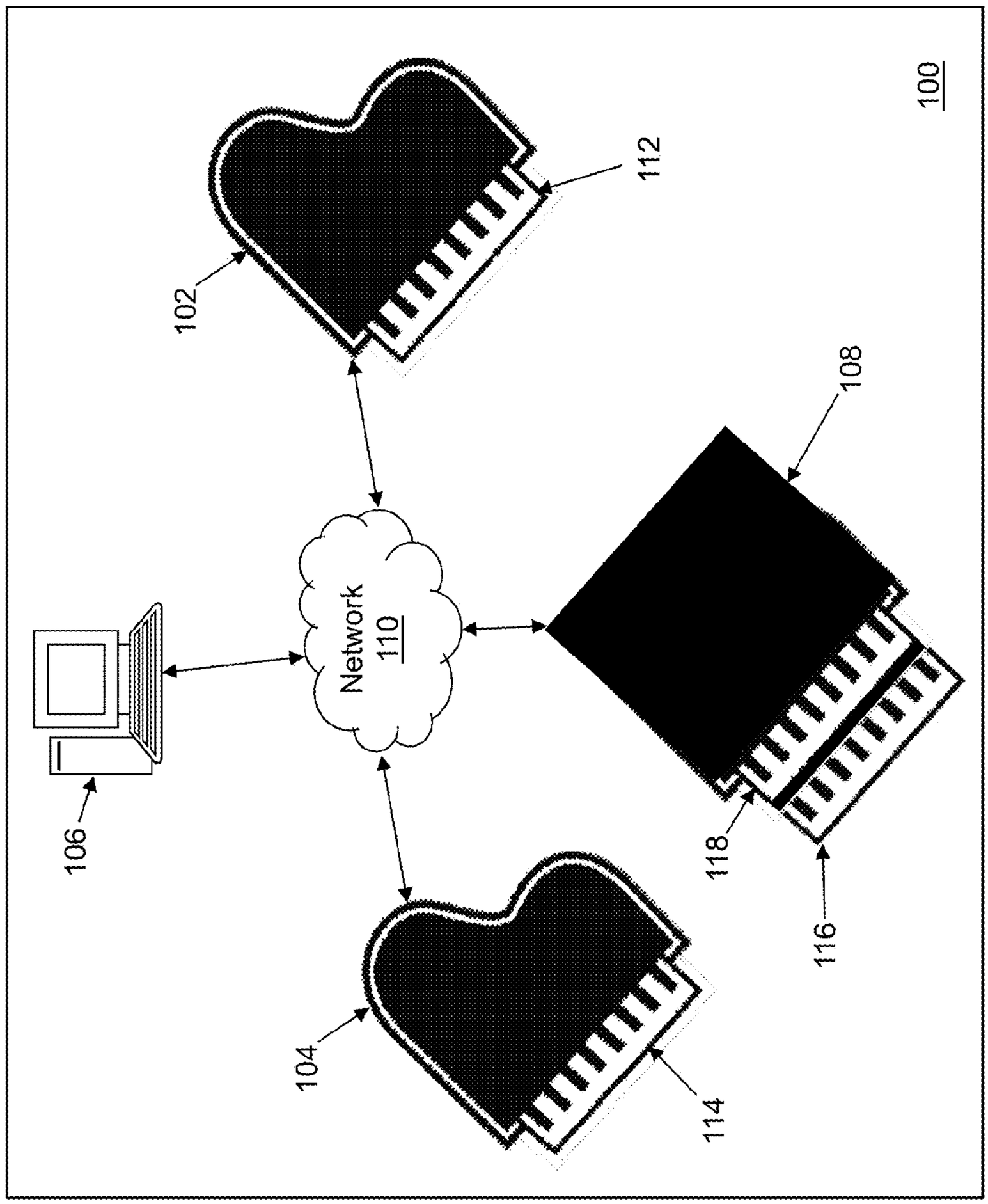

Fig. 1

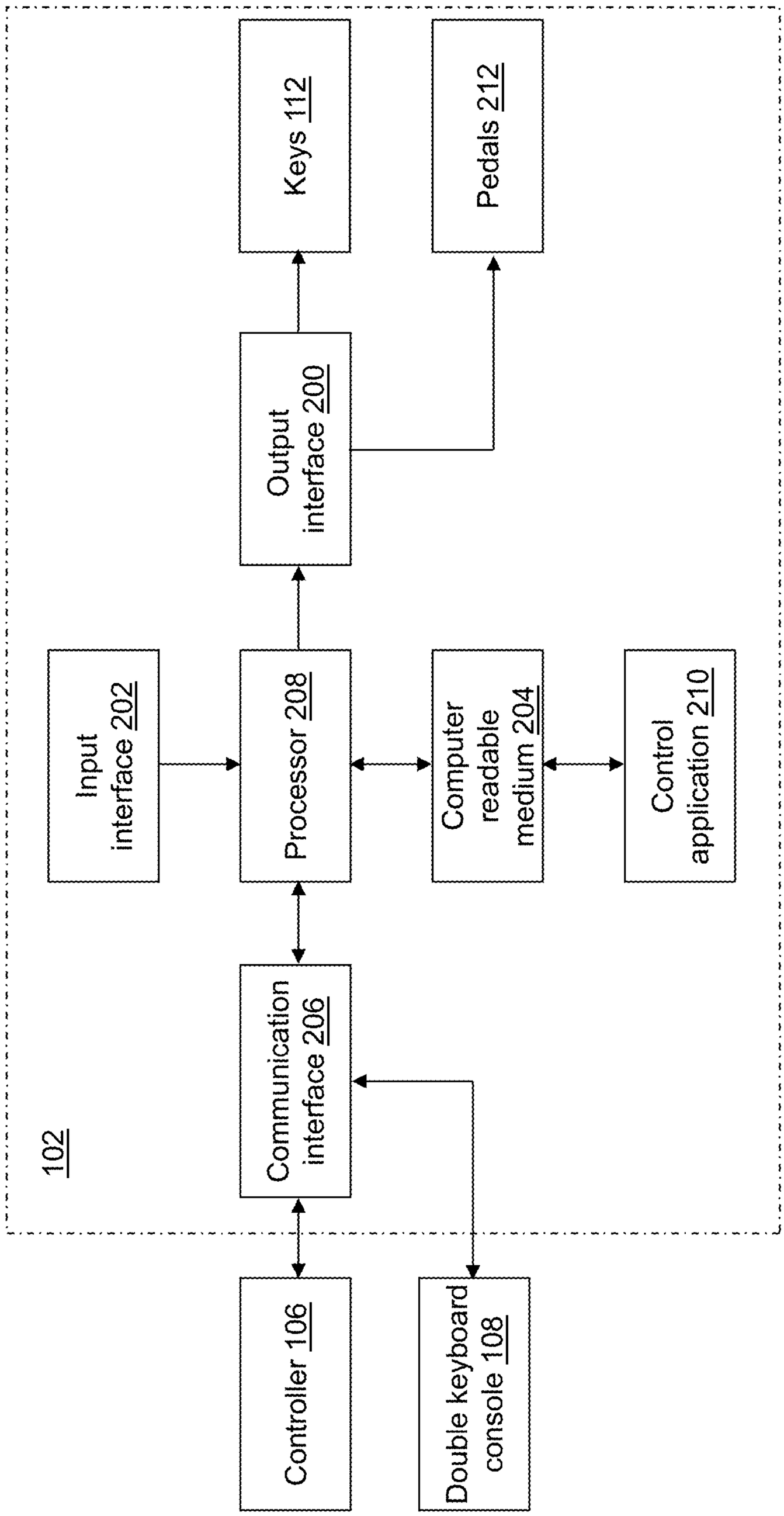
102
Input interface 202
Processor 208
Output interface 200
Keys 112
Pedals 212
Computer readable medium 204
Control application 210
Communication interface 206
Controller 106
Double keyboard console 108

Fig. 2

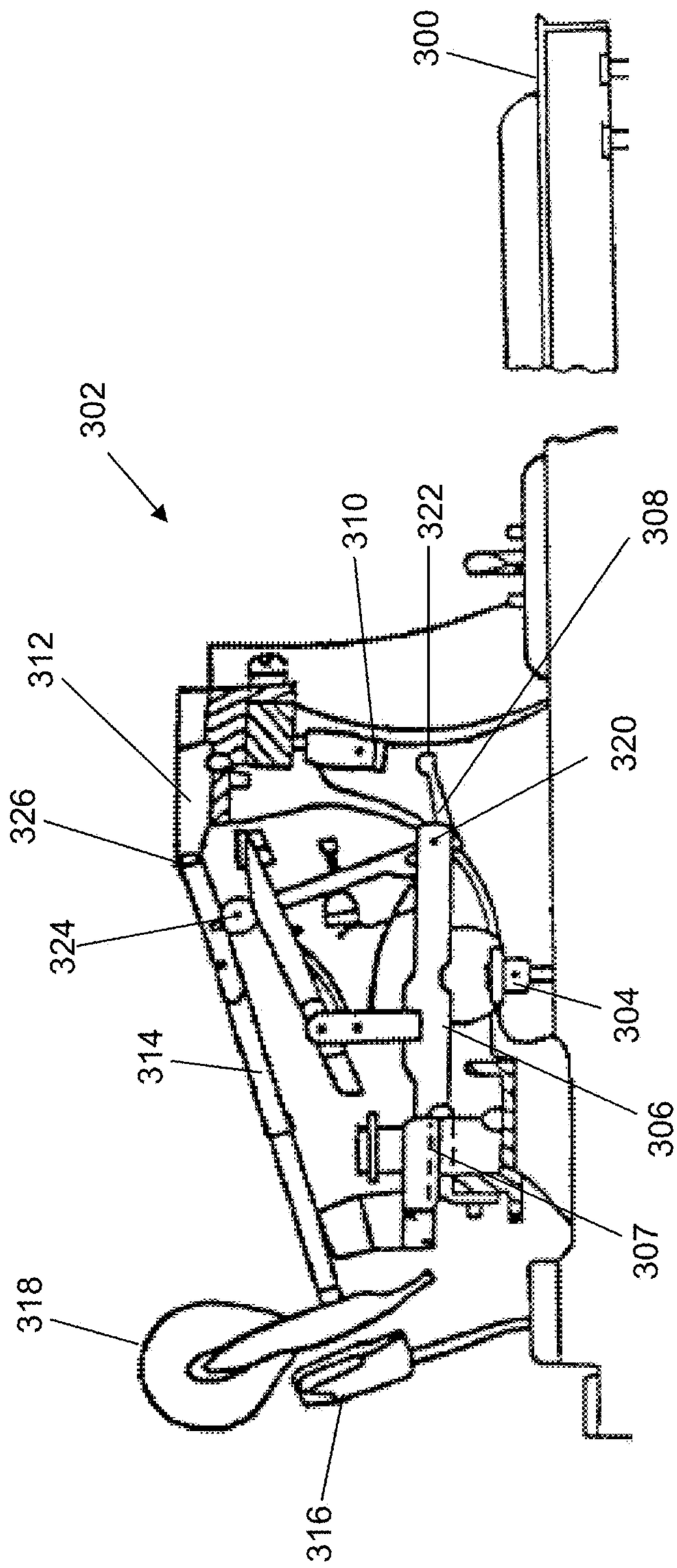

Fig. 3

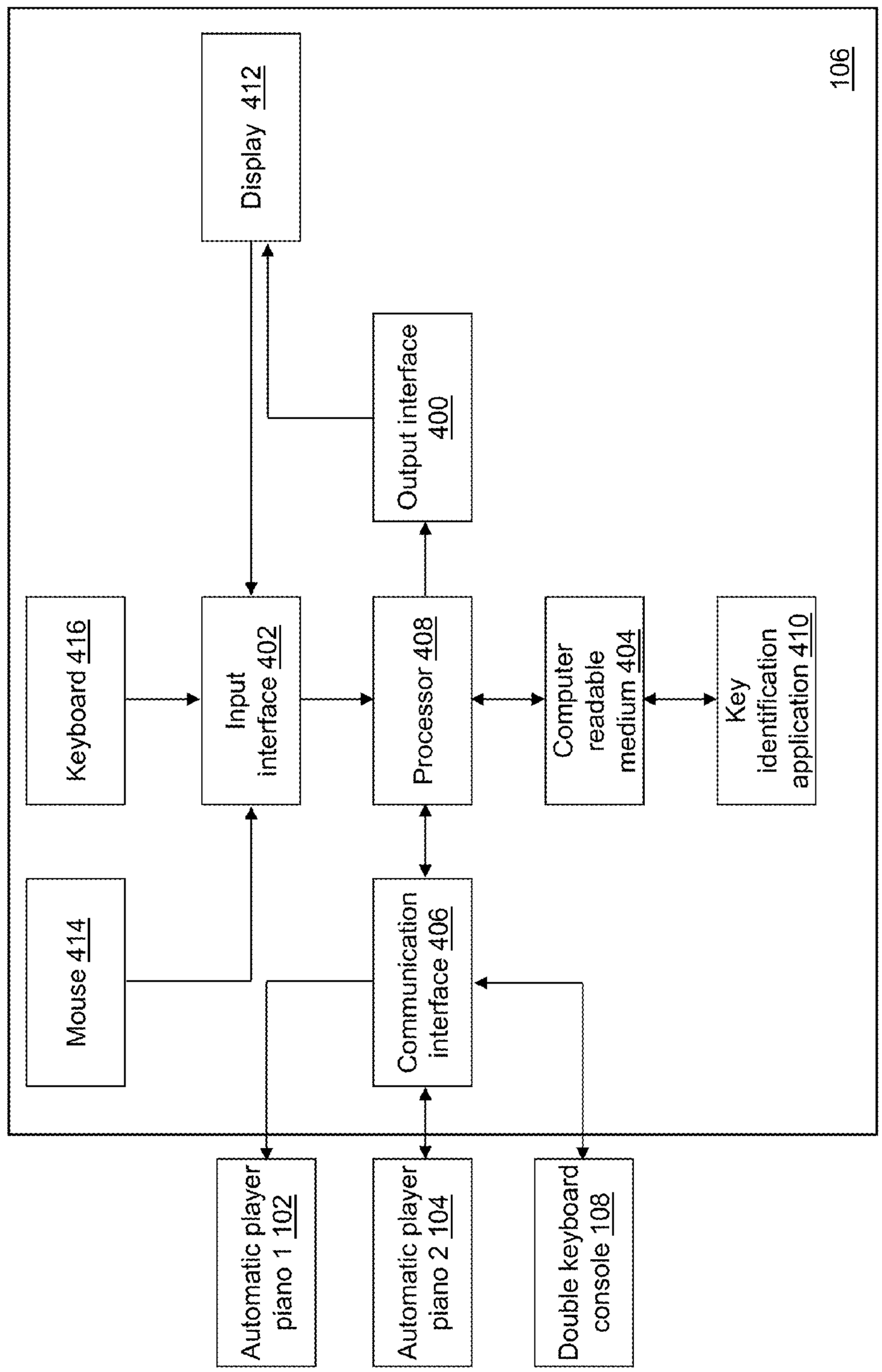
Display 412
106
Output interface 400
Keyboard 416
Input interface 402
Processor 408
Computer readable medium 404
Key identification application 410
Mouse 414
Communication interface 406
Automatic player piano 1 102
Automatic player piano 2 104
Double keyboard console 108

Fig. 4

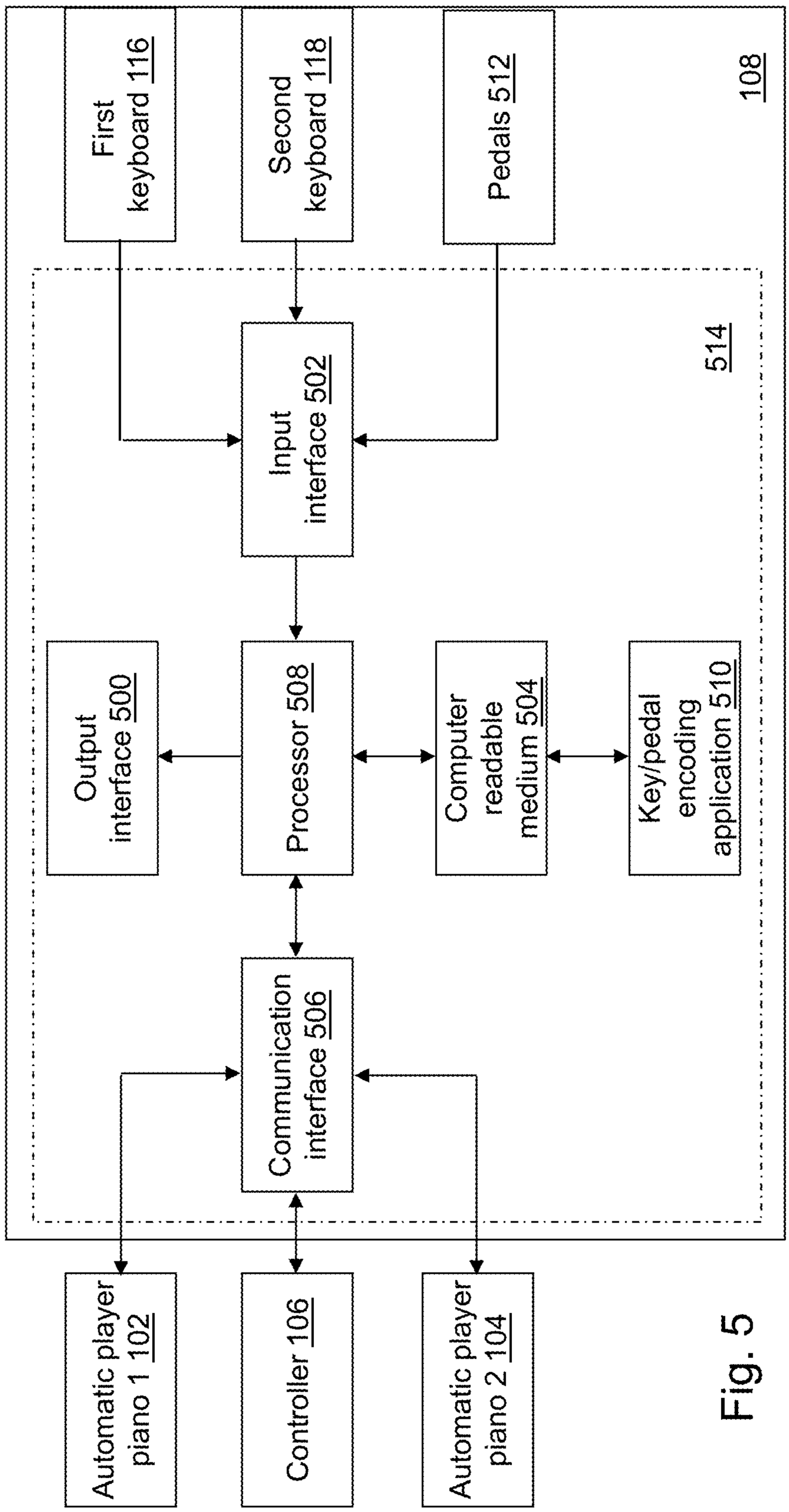
First keyboard 116
Second keyboard 118
Pedals 512
108
514
Input interface 502
Output interface 500
Processor 508
Computer readable medium 504
Key/pedal encoding application 510
Communication interface 506
Automatic player piano 1 102
Controller 106
Automatic player piano 2 104

Fig. 5

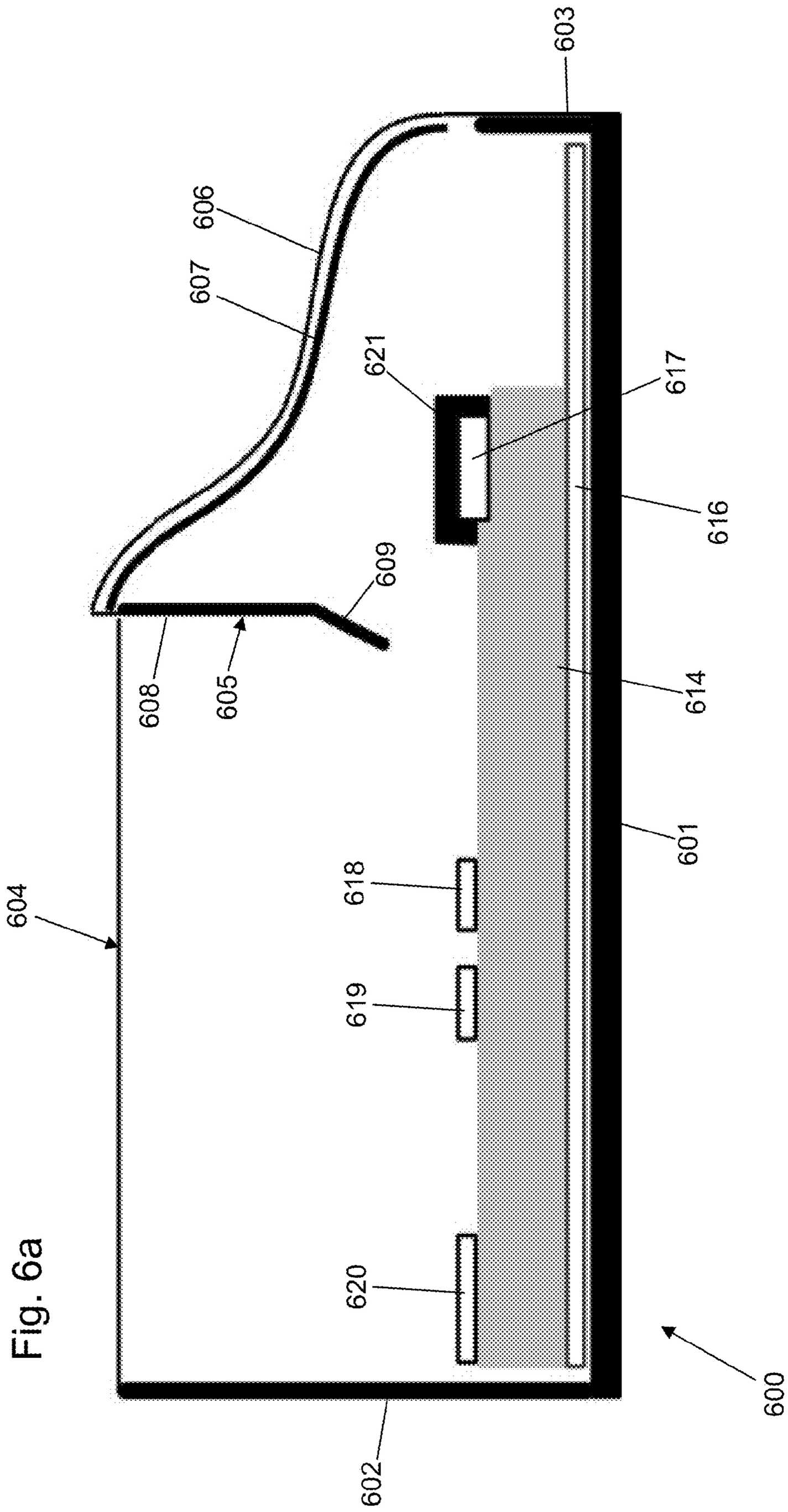
603
606
607
621
617
616
609
608
605
614
601
618
604
619
620
600
602

Fig. 6a

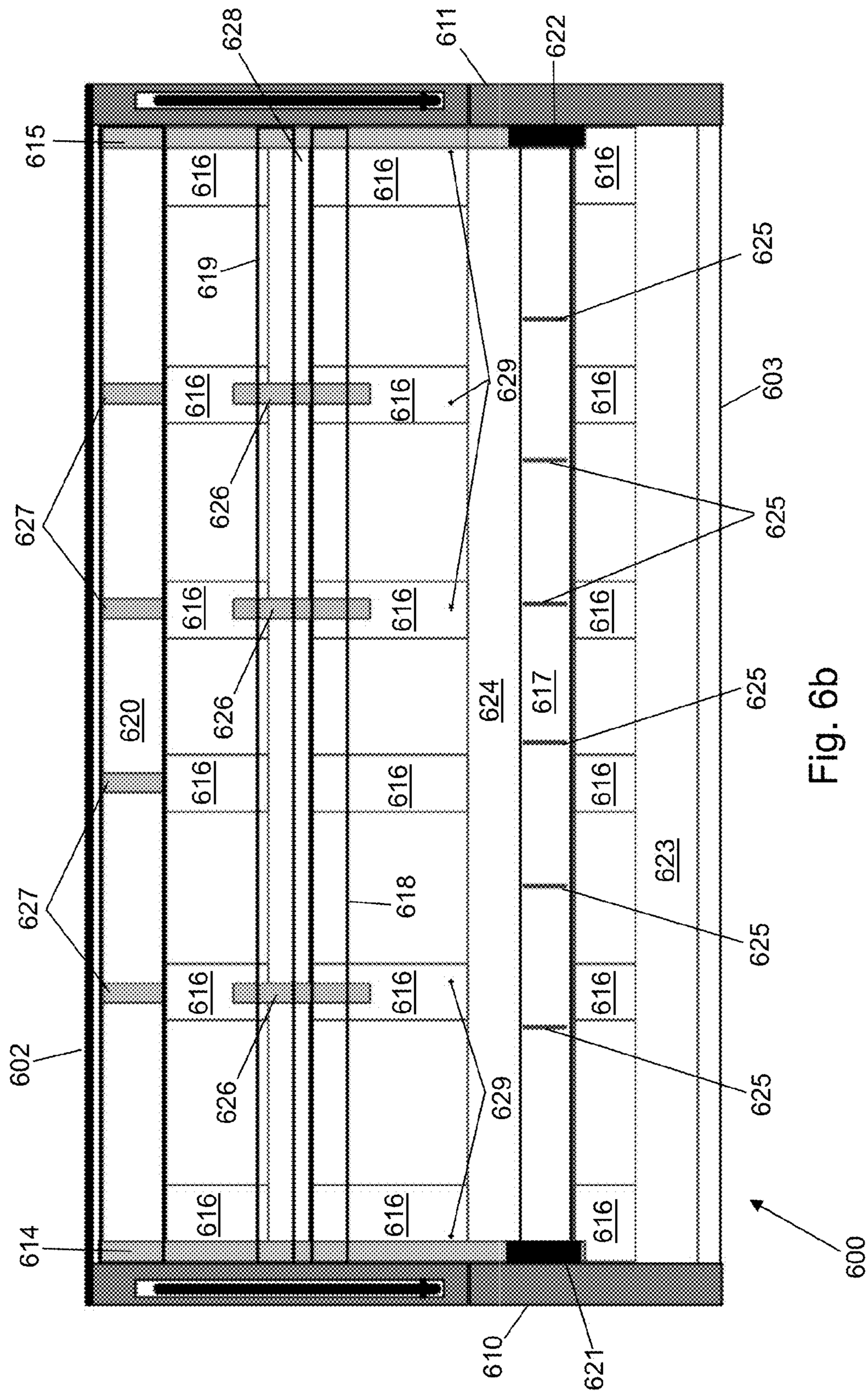
628
611
622
615
616
619
625
603
627
626
629
620
624
617
623
618
602
614
610
621
600

Fig. 6b

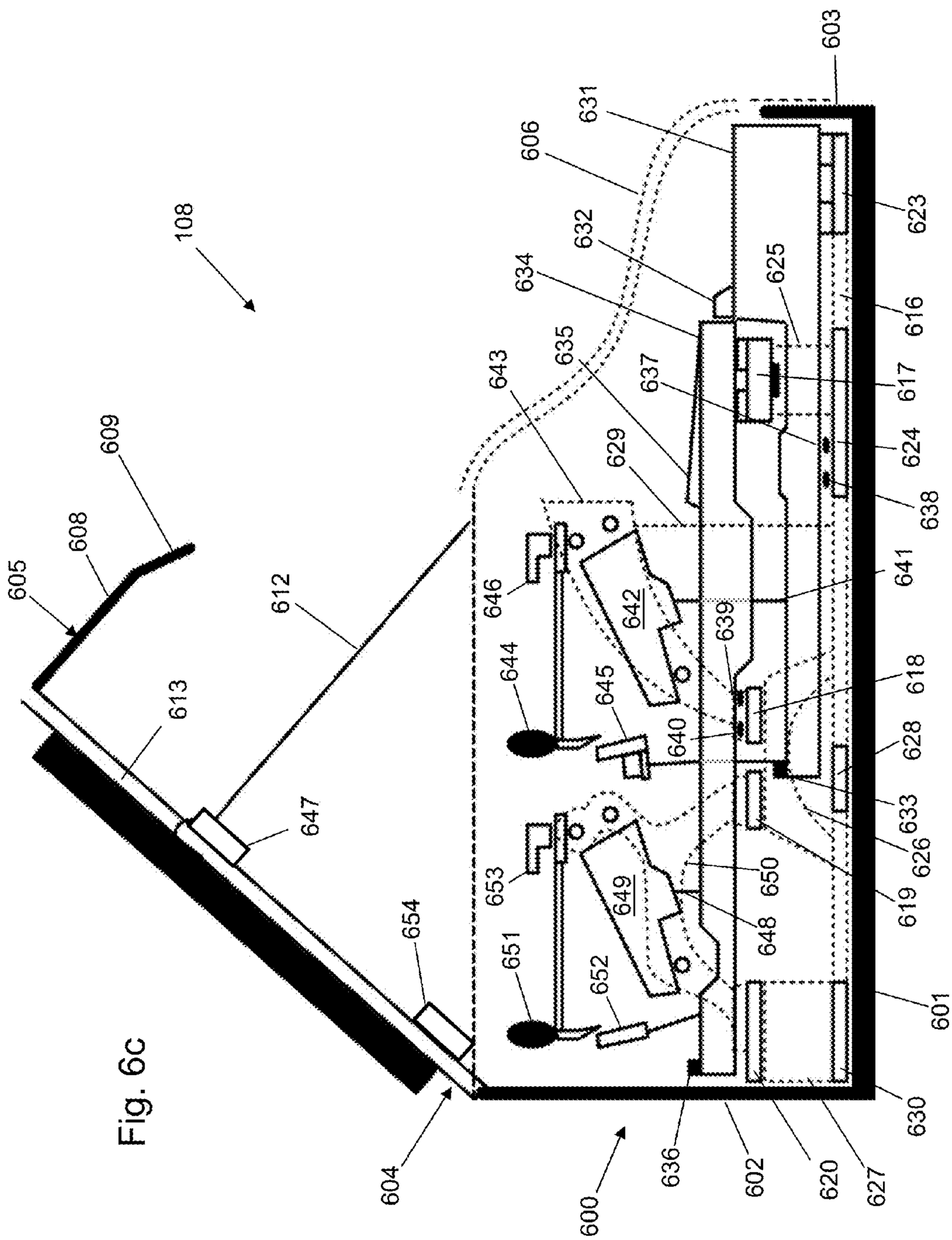
108
605
608
609
613
612
647
604
654
651
652
653
649
648
650
600
636
602
620
627
630
601
619
626
633
628
618
640
645
644
646
642
639
641
638
624
617
616
623
603
631
606
632
634
625
635
637
643
629

Fig. 6c

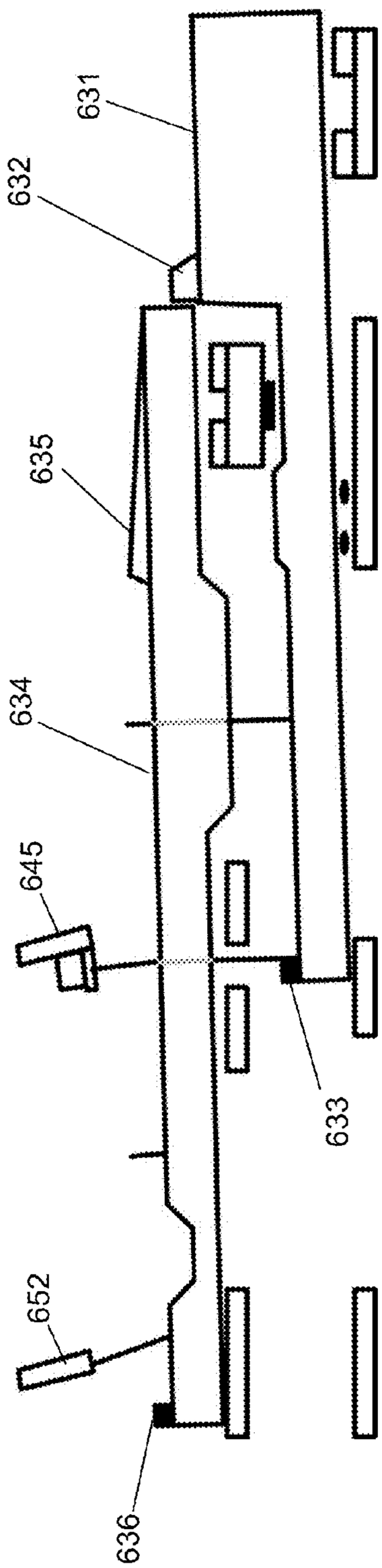

Fig. 7a

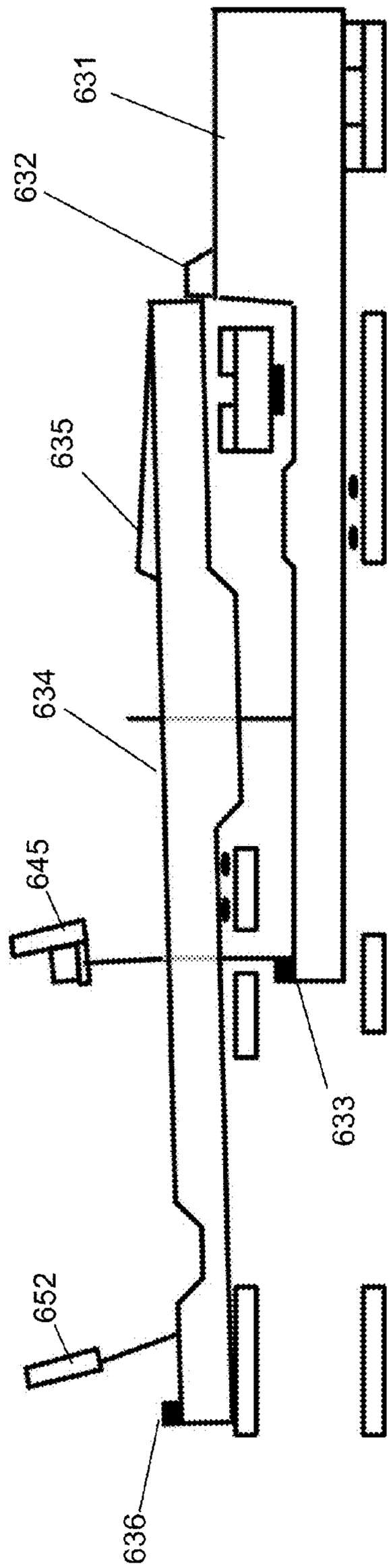

Fig. 7b

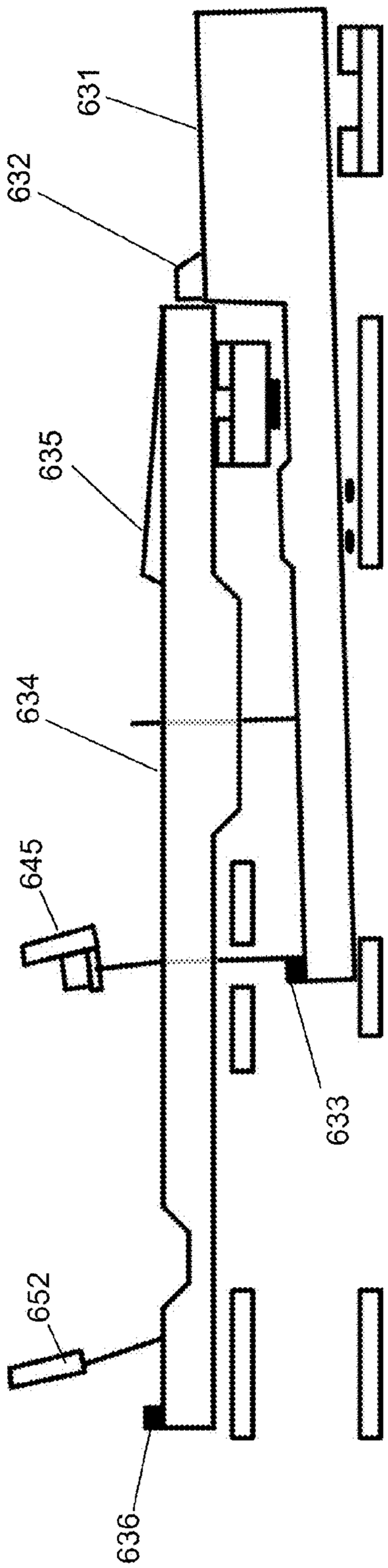

Fig. 7c

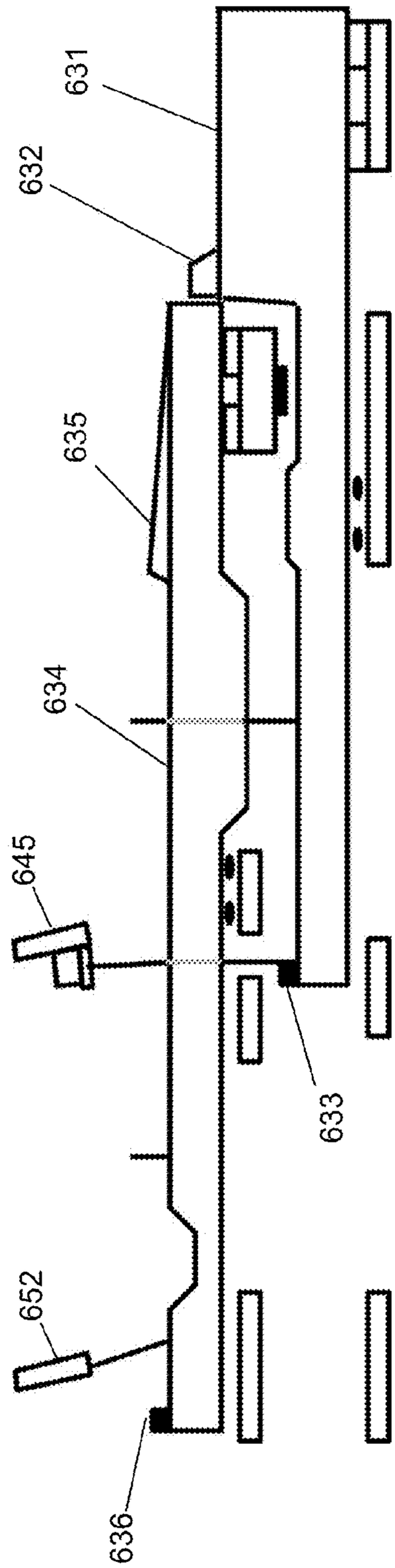

Fig. 7d

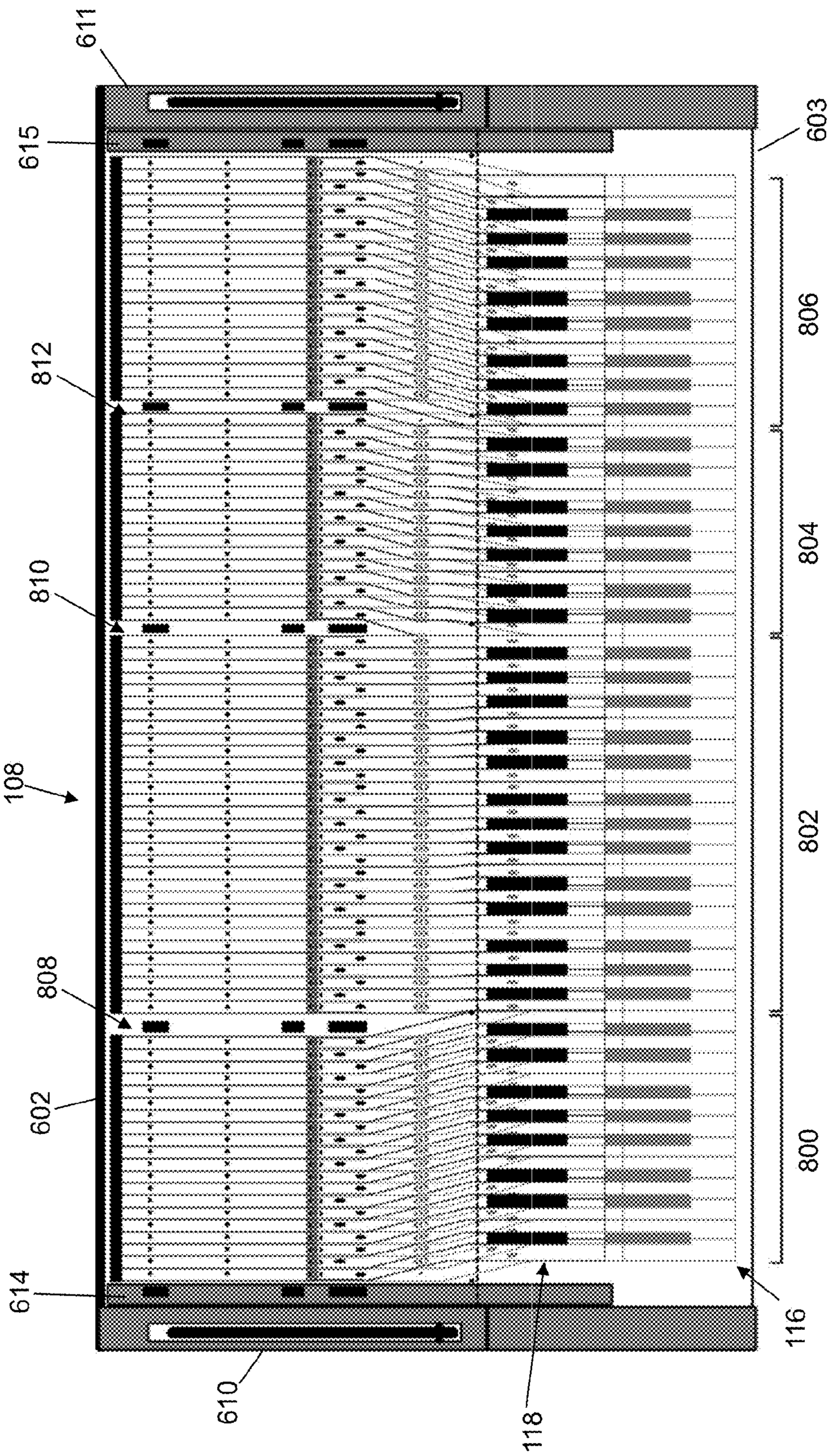

Fig. 8a

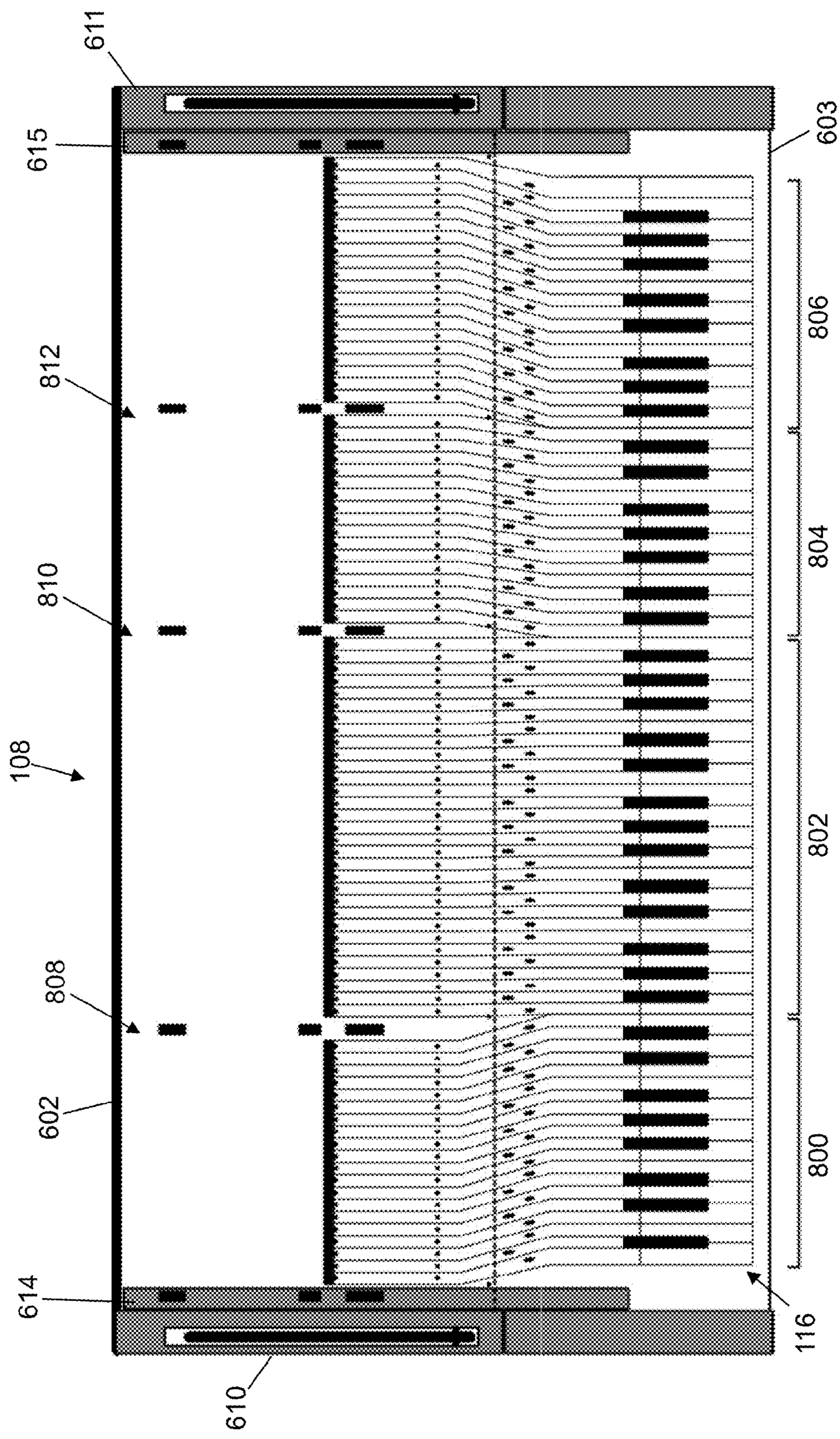

Fig. 8b

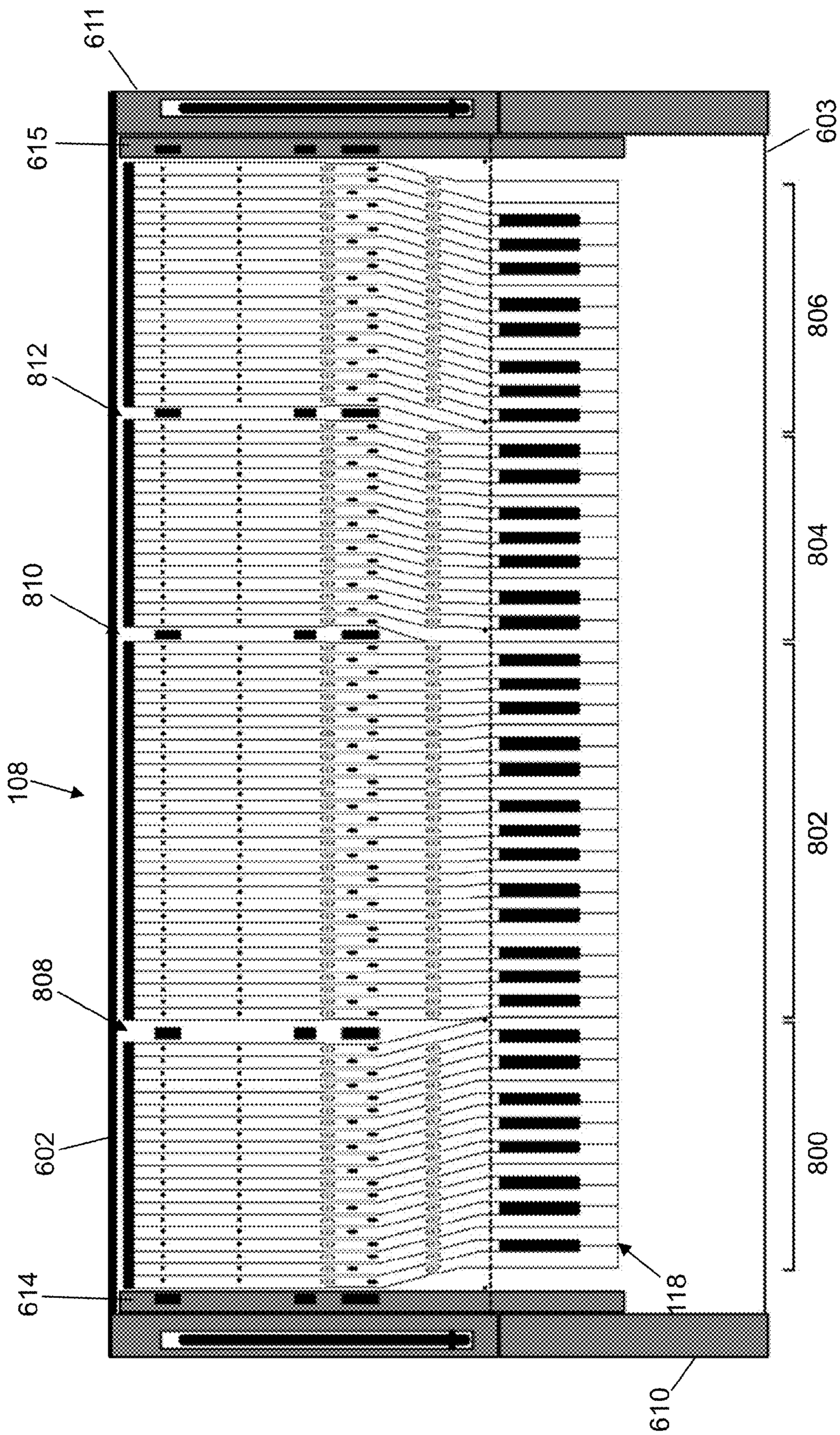

Fig. 8c

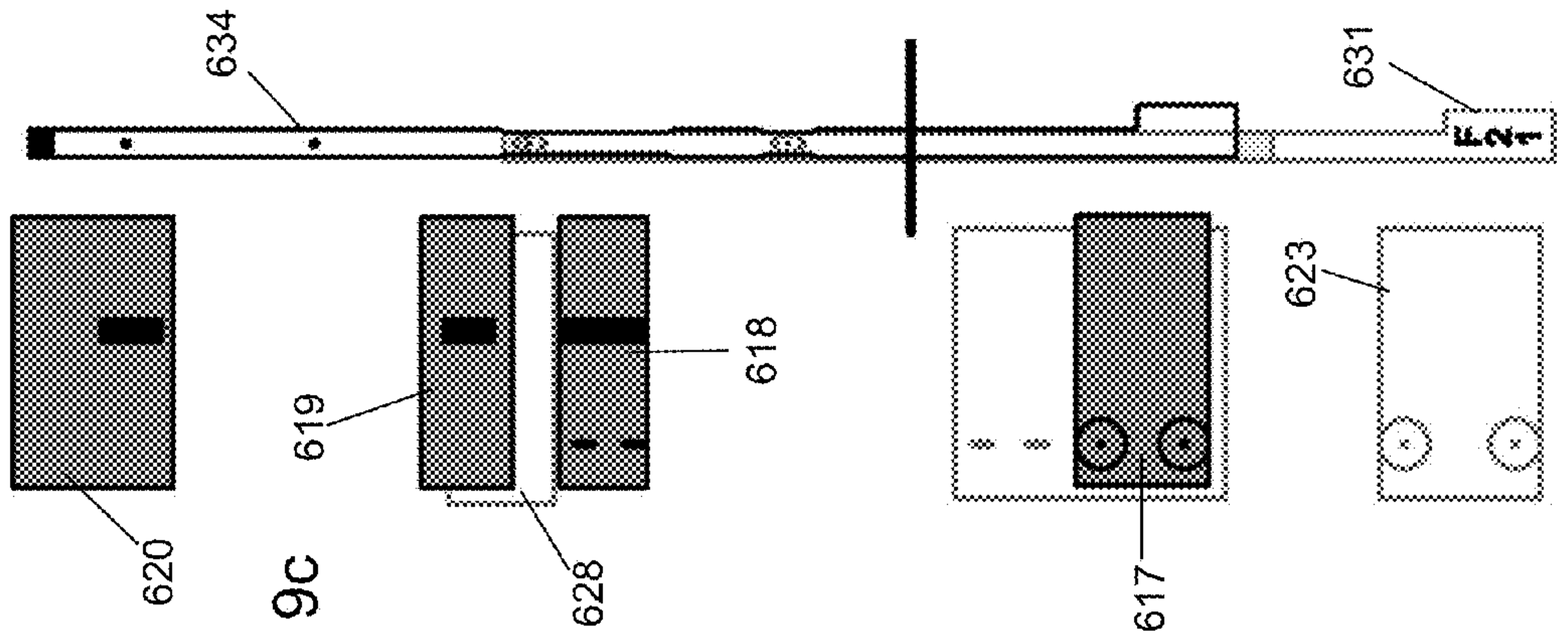

Fig. 9c

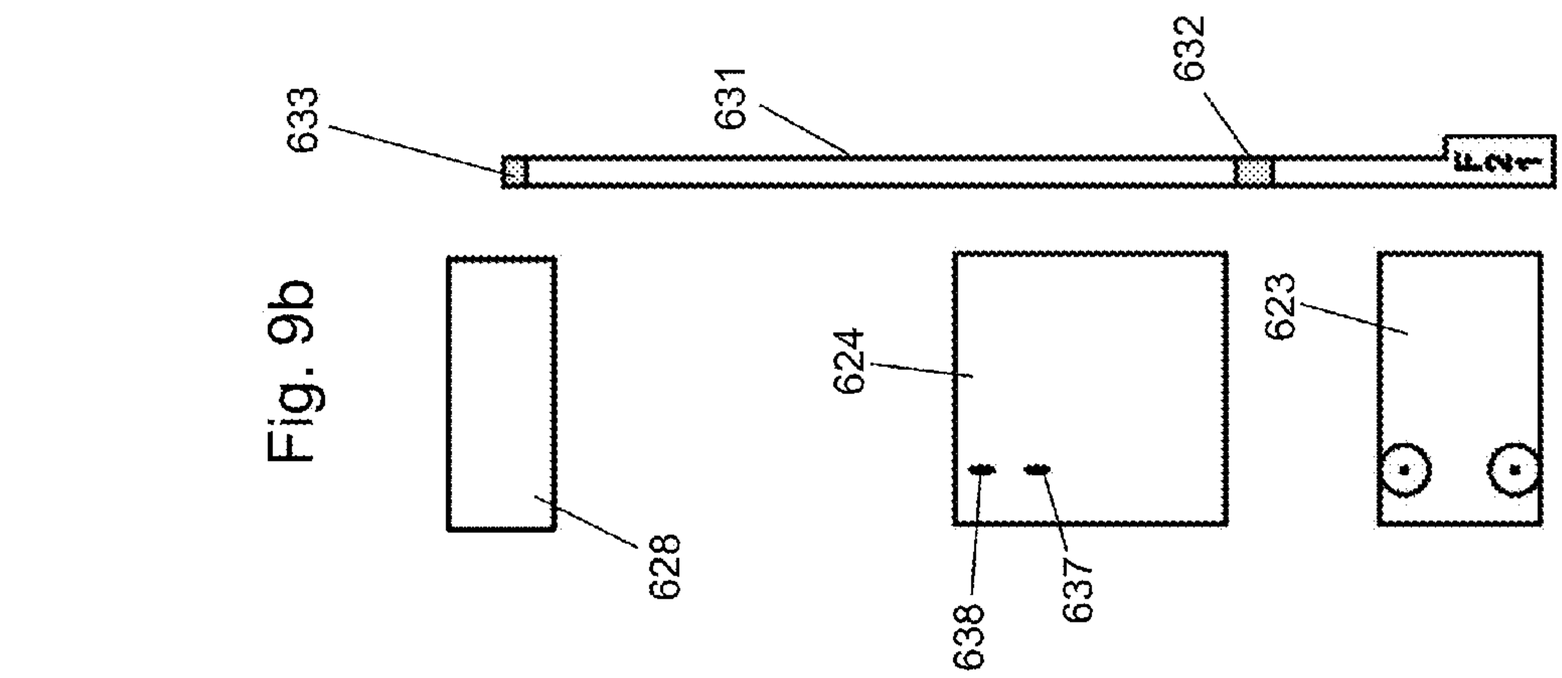

Fig. 9b

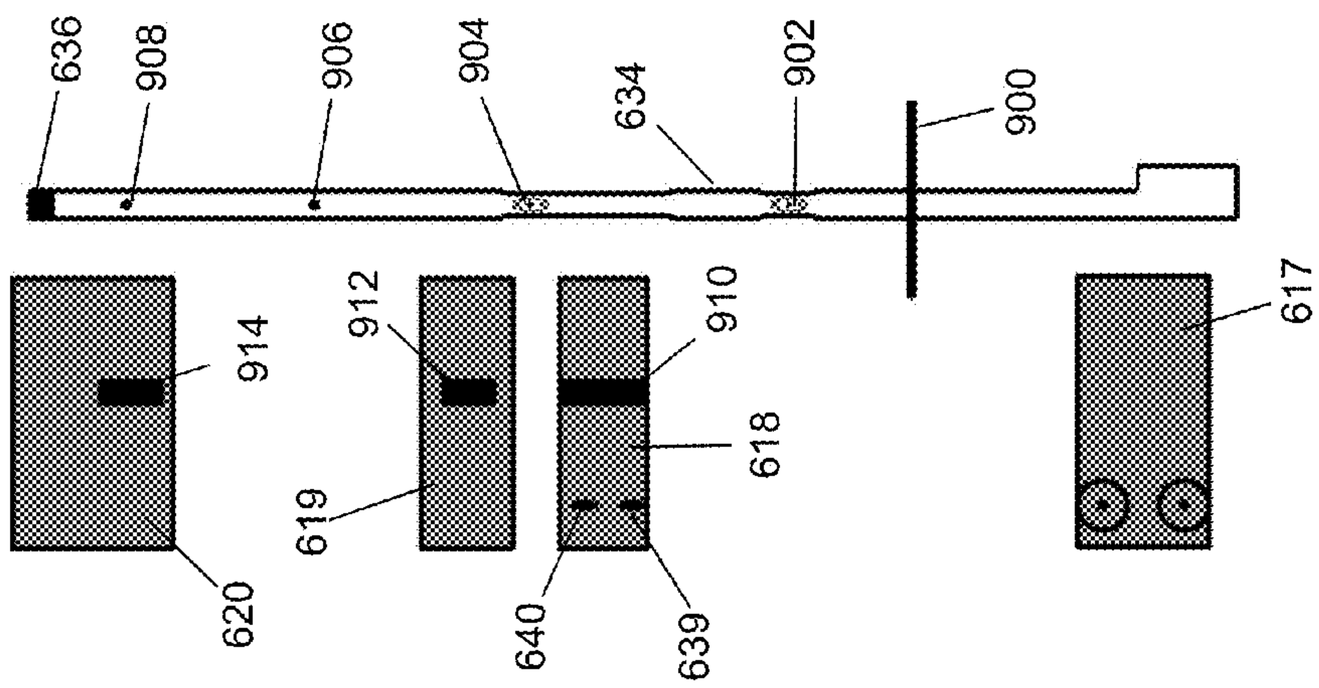

Fig. 9a

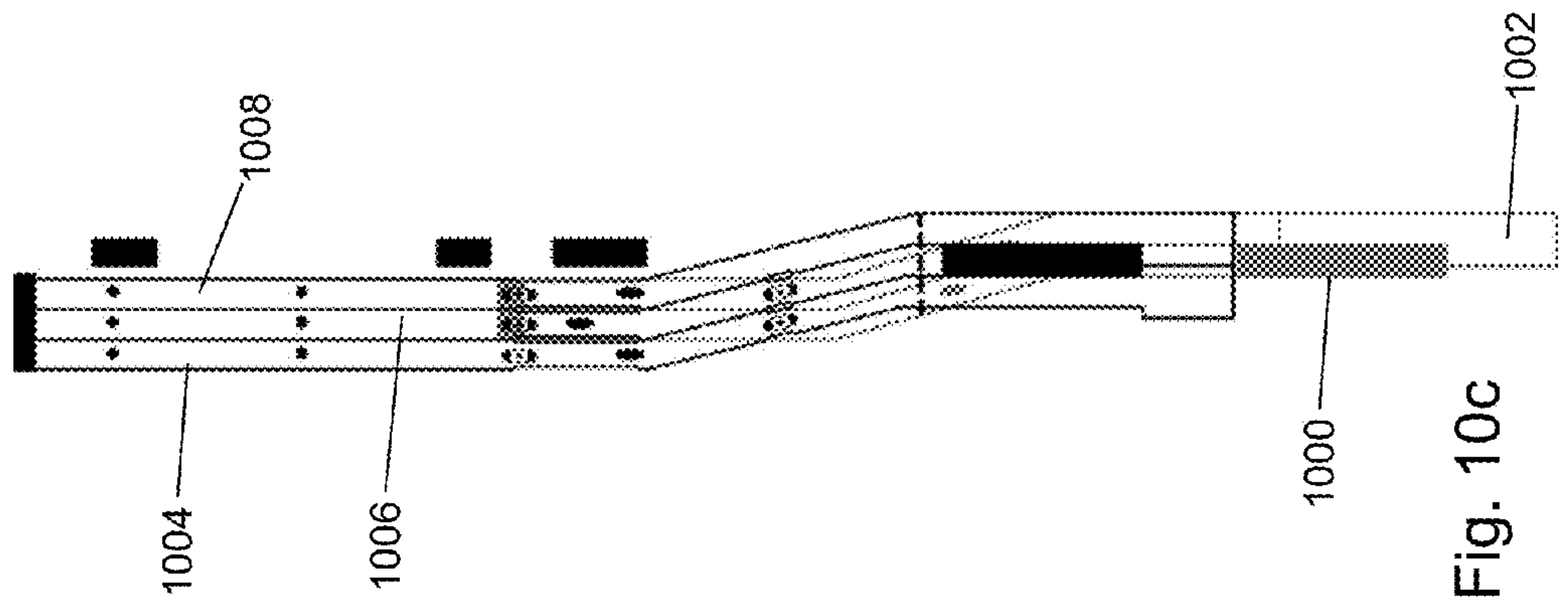

Fig. 10c

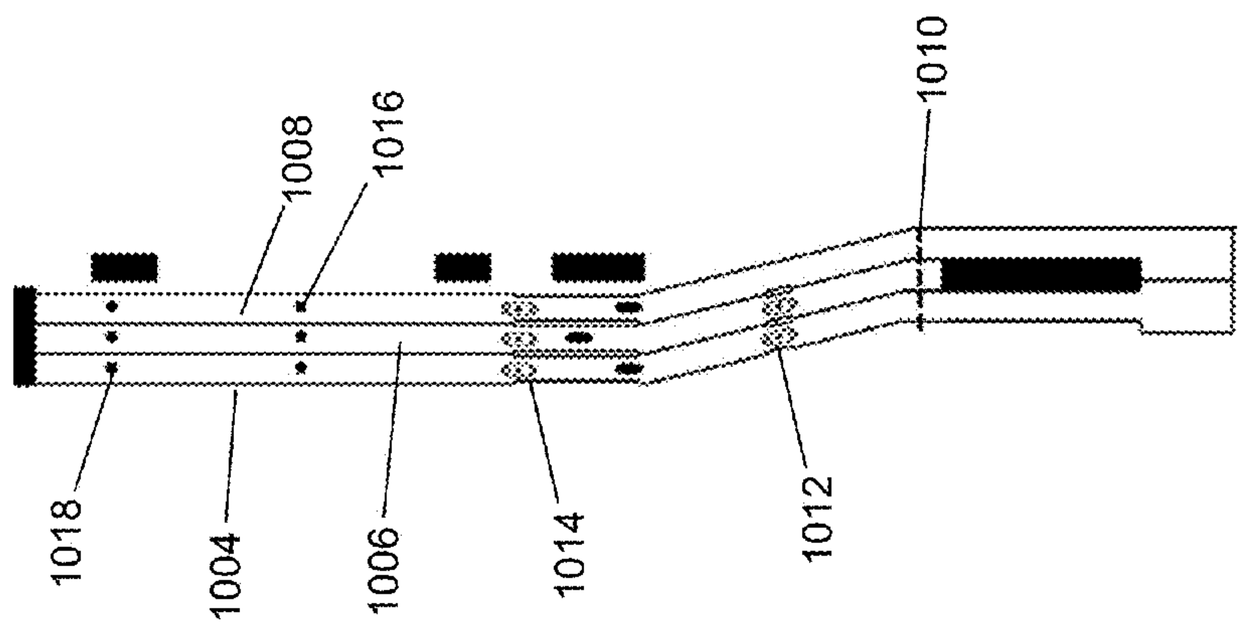

Fig. 10b

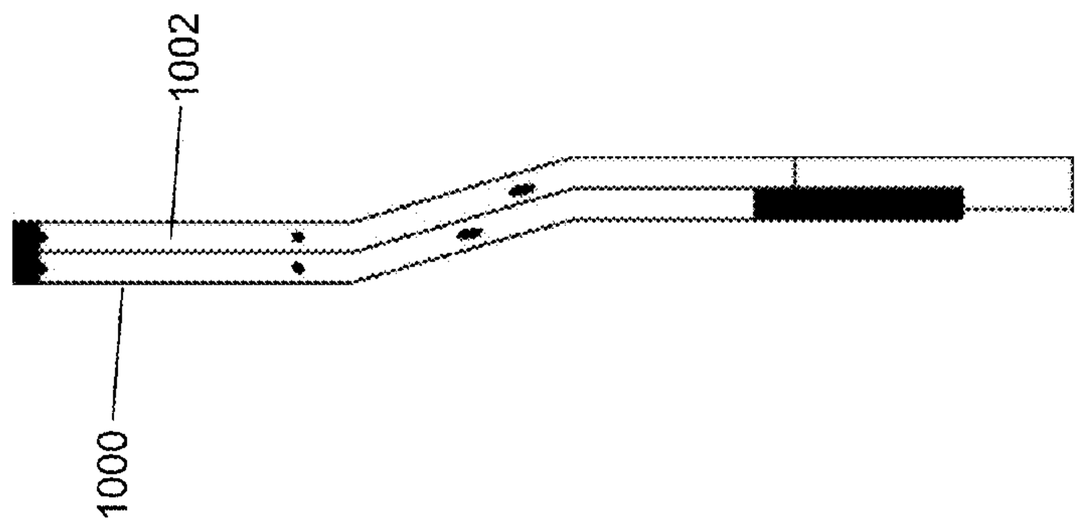

Fig. 10a

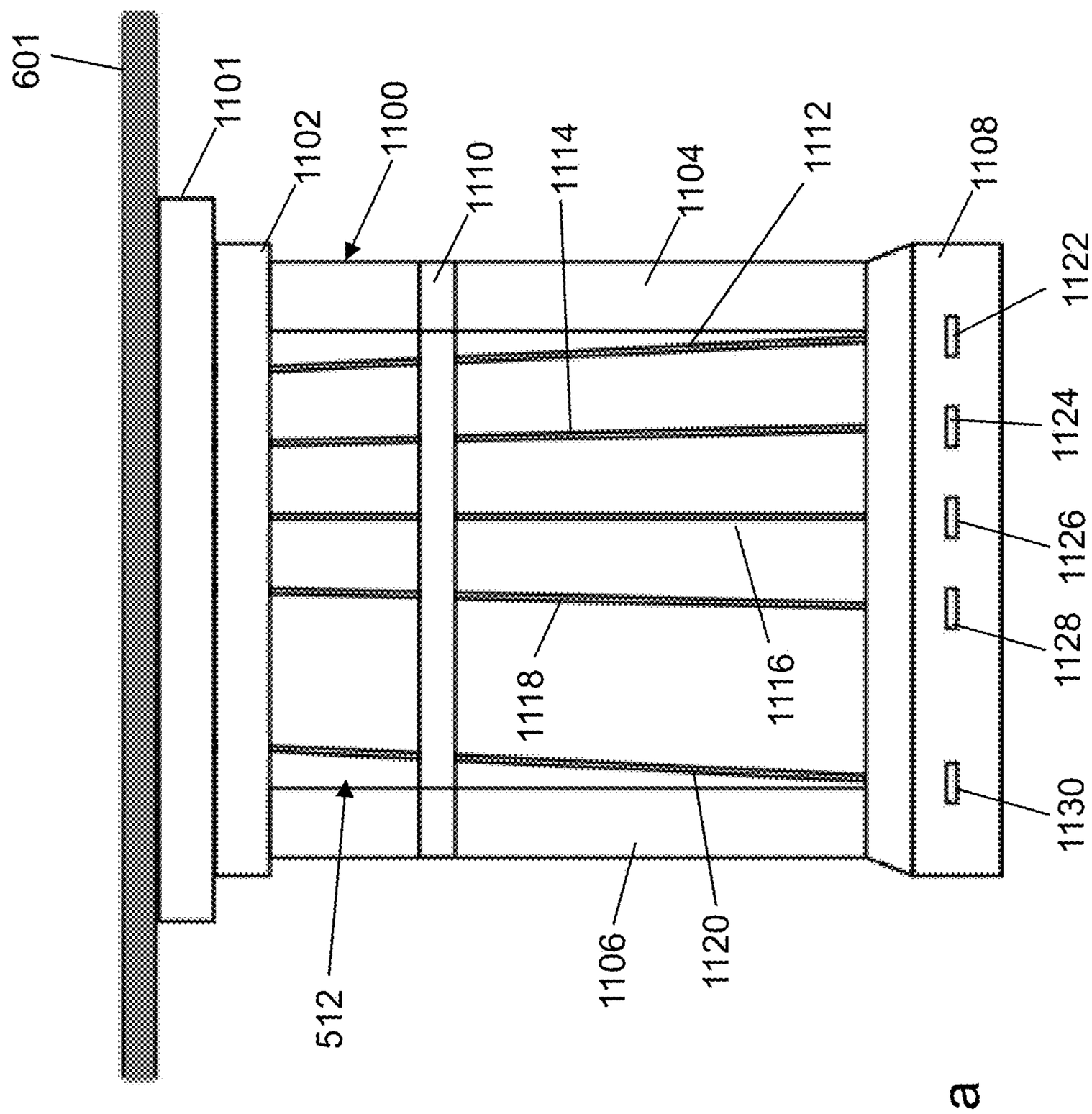
601
1101
1102
1100
1110
1114
1104
1112
1108
1122
1124
1126
1128
1130
1118
1116
1120
1106
512

Fig. 11a

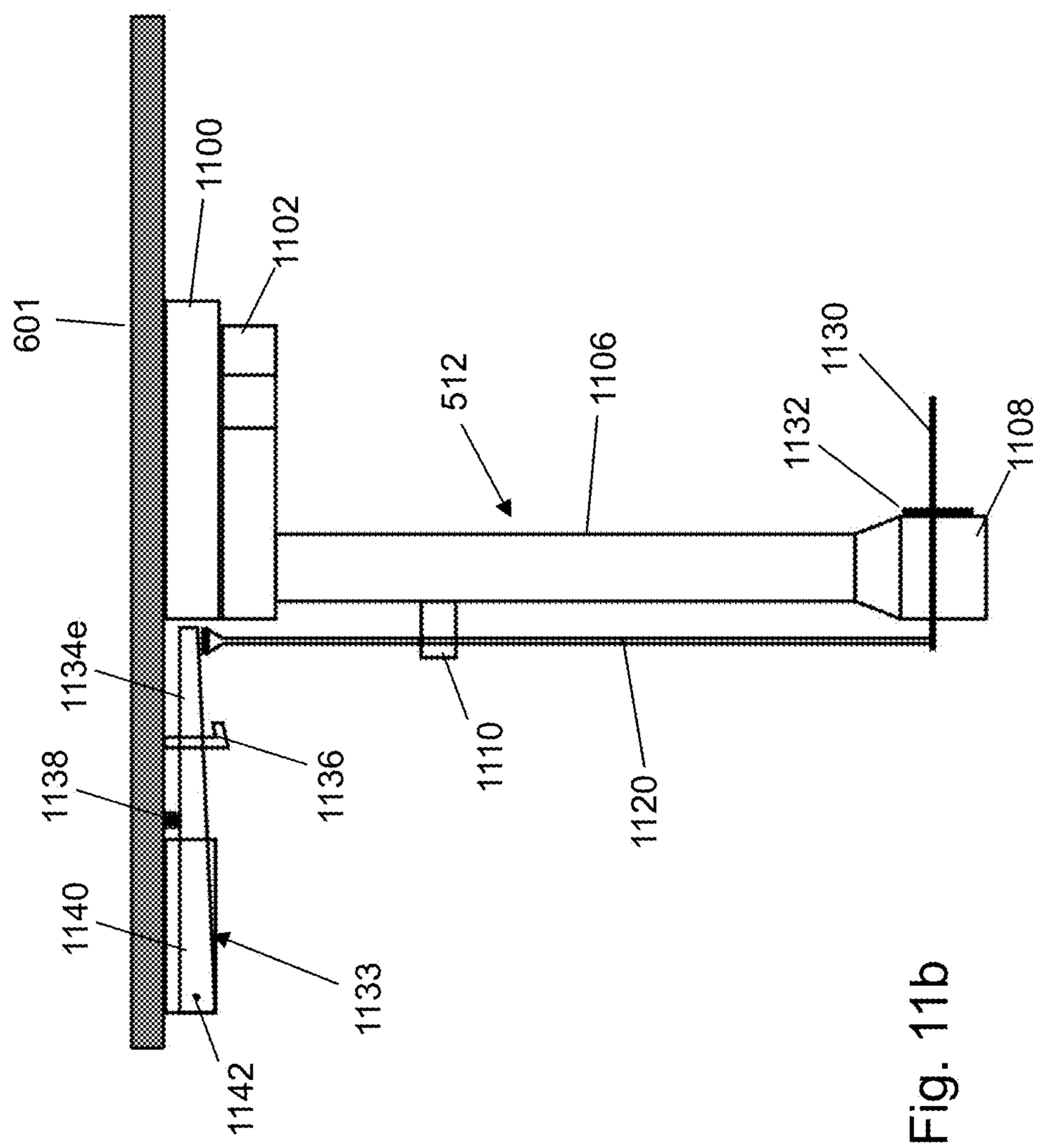
601
1100
1102
512
1106
1130
1132
1108
1134e
1138
1136
1110
1120
1140
1133
1142

Fig. 11b

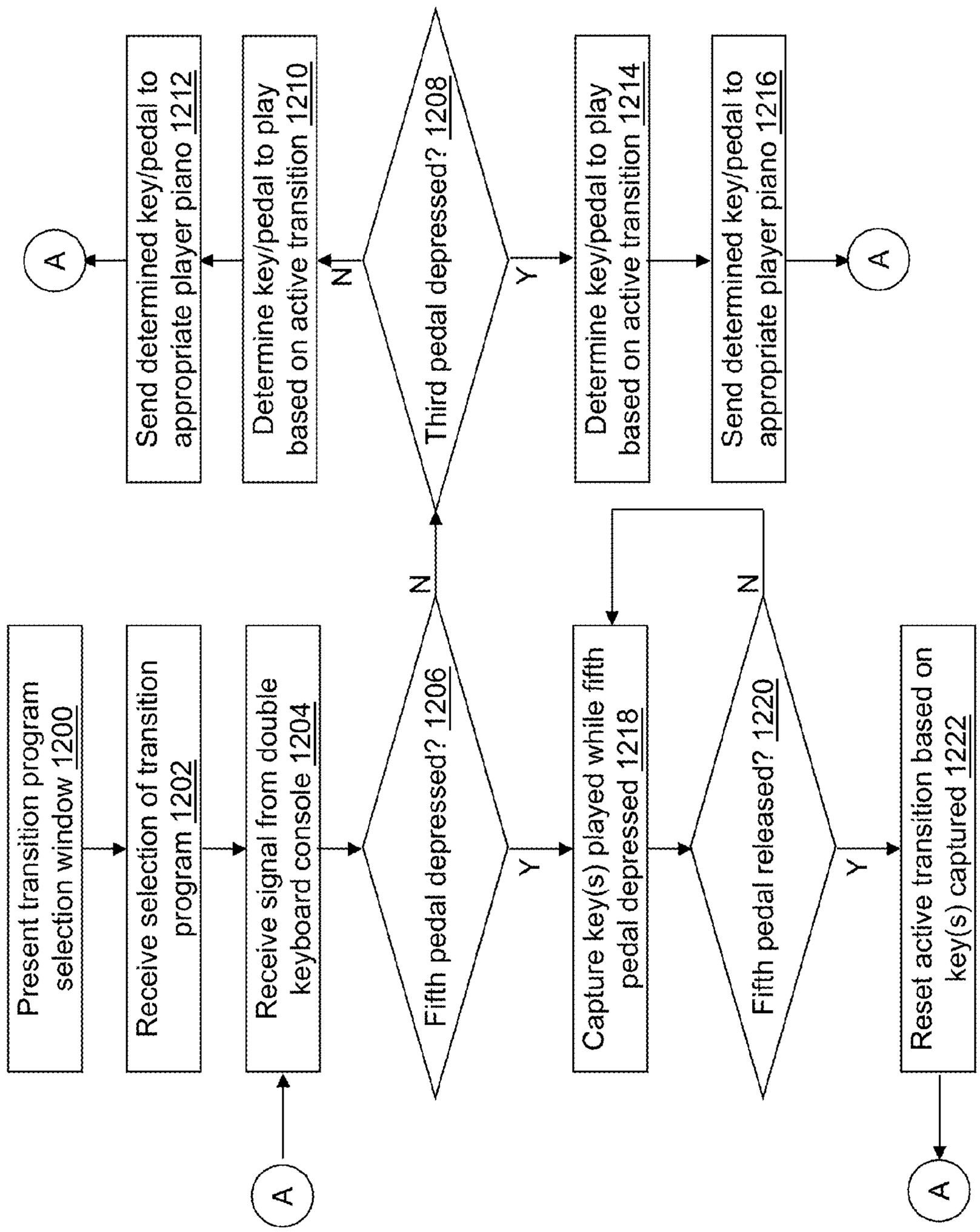
Present transition program selection window 1200
Receive selection of transition program 1202
Receive signal from double keyboard console 1204
Fifth pedal depressed? 1206
N
Y
Third pedal depressed? 1208
N
Y
Capture key(s) played while fifth pedal depressed 1218
Fifth pedal released? 1220
N
Y
Reset active transition based on key(s) captured 1222
Send determined key/pedal to appropriate player piano 1212
Determine key/pedal to play based on active transition 1210
Determine key/pedal to play based on active transition 1214
Send determined key/pedal to appropriate player piano 1216
A
A
A
A

Fig. 12

DOUBLE KEYBOARD PIANO SYSTEM

BACKGROUND

In the early twentieth century Emmanuel Moor pioneered the concept of a double-manual piano, an instrument that uses a normal piano's basic means of tone production, but which has at the front end two keyboards stacked in the manner of some harpsichords or organs. Moor persuaded a number of piano makers to build his device, including Steinway & Sons, who produced a single double-manual piano in 1929. Although these instruments aroused considerable curiosity, they did not catch on to any great degree, and since about 1940 none have been manufactured. As a result, very few remain today. Because of their mechanical complexity, the double-manual pianos still in existence are difficult to maintain, and accordingly, may be difficult or impossible to play. Moor's mechanism, which connects the second keyboard to the same set of hammers controlled by the first keyboard, is also inherently balky and heavy in a way that a pianist can readily feel under their fingers and that requires significant effort to transport.

SUMMARY

In an example embodiment, a double keyboard piano system is provided. The double keyboard piano system may include a first automatic player piano, a second automatic player piano, and a double keyboard console including a first keyboard and a second keyboard mounted above the first keyboard. The first automatic player piano is in communication with the double keyboard console to receive a first signal including first information describing a first key for the first automatic player piano to automatically play based on a first key of the first keyboard being played, and the second automatic player piano is in communication with the double keyboard console to receive a second signal including second information describing a second key for the second automatic player piano to automatically play based on a second key of the second keyboard being played.

Other principal features and advantages of the invention will become apparent to those skilled in the art upon review of the following drawings, the detailed description, and the appended claims.

BRIEF DESCRIPTION OF THE DRAWINGS

Illustrative embodiments of the invention will hereafter be described with reference to the accompanying drawings, wherein like numerals denote like elements.

FIG. **1** depicts a block diagram of a double keyboard piano system in accordance with an illustrative embodiment.

FIG. **2** depicts a block diagram of an automatic player piano of the double keyboard piano system of FIG. **1** in accordance with an illustrative embodiment.

FIG. **3** depicts a side view of a piano action mechanism in accordance with an illustrative embodiment.

FIG. **4** depicts a block diagram of a controller of the double keyboard piano system of FIG. **1** in accordance with an illustrative embodiment.

FIG. **5** depicts a block diagram of a double keyboard console of the double keyboard piano system of FIG. **1** in accordance with an illustrative embodiment.

FIGS. **6***a*-**6***c* depict side and top views of the double keyboard console of FIG. **5** in accordance with an illustrative embodiment.

FIGS. **7***a*-**7***d* depict side views of two stacked keys of the double keyboard console of FIG. **5** in various states of being depressed (played) and not being depressed (not being played) in accordance with an illustrative embodiment.

FIGS. **8***a*-**8***c* depict top views of the double keyboard console of FIG. **5** without a lid to show the key layouts in accordance with an illustrative embodiment.

FIGS. **9***a*-**9***c* depict top views of the two stacked keys of FIGS. **7***a*-**7***d* in accordance with an illustrative embodiment.

FIGS. **10***a*-**10***c* depict top views of curved, stacked keys of the double keyboard console of FIG. **5** in accordance with an illustrative embodiment.

FIGS. **11***a*-**11***b* depict front and side views of pedals of the double keyboard console of FIG. **5** in accordance with an illustrative embodiment.

FIG. **12** depicts a flow diagram illustrating example operations performed through use of a double keyboard piano application of the automatic player piano of FIG. **2** in accordance with an illustrative embodiment.

DETAILED DESCRIPTION

With reference to FIG. **1**, a block diagram of a double keyboard piano system **100** is shown in accordance with an illustrative embodiment. In an illustrative embodiment, double keyboard piano system **100** includes a first automatic player piano **102**, a second automatic player piano **104**, a controller **106**, a double keyboard console **108**, and a network **110**. The components of double keyboard piano system **100** may be positioned in a single location, a single facility, and/or may be remote from one another.

Network **110** may include one or more networks of the same or different types. Network **110** can be any type of wired and/or wireless public or private network including a cellular network, a local area network, a wide area network such as the Internet, etc. Network **110** further may be comprised of subnetworks and consist of any number of devices. Network **110** further may comprise direct connections between first automatic player piano **102**, second automatic player piano **104**, controller **106**, and double keyboard console **108**. For example, wired or wireless connectors may connect double keyboard console **108** to controller **106**, and wired or wireless connectors may connect first automatic player piano **102** and second automatic player piano **104** to controller **106**.

First automatic player piano **102** and second automatic player piano **104** may be the same or different types of automatic player pianos. First automatic player piano **102** and second automatic player piano **104** are acoustic-tone-producing, electronically controlled pianos. For example, first automatic player piano **102** and/or second automatic player piano **104** may comprise a Yamaha Disklavier™ player piano. First automatic player piano **102** and/or second automatic player piano **104** may be upright pianos, baby grand pianos, or grand pianos. First automatic player piano **102** may include a first plurality of controlled keys **112** that include black keys and white keys as understood by a person of skill in the art according to the type of piano. Second automatic player piano **104** may include a second plurality of controlled keys **114** that also include black keys and white keys as understood by a person of skill in the art according to the type of piano.

Double keyboard console **108** may include a first keyboard **116** and a second keyboard **118** both of which include black keys and white keys as understood by a person of skill in the art according to the type of piano. Double keyboard console **108** does not directly produce sound, but transmits signals to first automatic player piano **102** and/or second automatic player piano **104** either directly or indirectly through control-

ler **106**. The black and white keys of first keyboard **116** are used to control the first plurality of controlled keys **112** and/or the second plurality of controlled keys **114**. The black and white keys of second keyboard **118** are used to control the second plurality of controlled keys **114** and/or the first plurality of controlled keys **112**. The second plurality of controlled keys **114** may be arranged and may operate in a manner similar to the first plurality of controlled keys **112** though this is not required. Similarly, the black and white keys of first keyboard **116** may be arranged and may operate in a manner similar to the first plurality of controlled keys **112**, and the black and white keys of second keyboard **118** may be arranged and may operate in a manner similar to the second plurality of controlled keys **114** though again this is not required.

In the illustrative embodiment, controller **106** receives signals from double keyboard console **108** indicating depression of one or more keys of first keyboard **116**, depression of one or more keys of second keyboard **118**, and/or use of one or more pedals of double keyboard console **108** by the pianist playing double keyboard console **108**. Controller **106** processes the signals and sends information associated with the processed signals to one or more of first automatic player piano **102** and second automatic player piano **104**. In another illustrative embodiment, double keyboard piano system **100** need not include controller **106**. In this illustrative embodiment, double keyboard console **108** sends signals directly to one or more of first automatic player piano **102** and second automatic player piano **104**. First automatic player piano **102** and/or second automatic player piano **104** may include electromechanical solenoids to control the playing of keys and to control use of the pedals based on the signals received from controller **106** and/or double keyboard console **108**. Controller **106** and/or double keyboard console **108** may send the signals based on a protocol understood by each device. For example, in an illustrative embodiment, the musical instrument digital interface (MIDI) protocol may be used to define the format and the content of the signals as understood by a person of skill in the art.

With reference to FIG. **2**, a block diagram of first automatic player piano **102** is shown in accordance with an illustrative embodiment. Second automatic player piano **104** may include the same or similar components. First automatic player piano **102** may include an output interface **200**, an input interface **202**, a computer-readable medium **204**, a communication interface **206**, a processor **208**, a controller application **210**, the first plurality of controlled keys **112**, and a plurality of controlled pedals **212**. Different and additional or fewer components may be incorporated into first automatic player piano **102** and/or second automatic player piano **104**. Of course, second automatic player piano **104** instead includes the second plurality of controlled keys **114**.

Output interface **200** provides an interface for controlling operation of the first plurality of controlled keys **112** and the plurality of controlled pedals **212**. First automatic player piano **102** and/or second automatic player piano **104** may have one or more output interfaces that use the same or a different interface technology.

Input interface **202** provides an interface for receiving information from the user for entry into first automatic player piano **102** and/or second automatic player piano **104** as known to those skilled in the art. Input interface **202** may use various input technologies including, but not limited to, a keyboard, a pen and touch screen, a mouse, a track ball, a touch screen, a keypad, one or more buttons, etc. to allow the user to enter information into first automatic player piano **102** and/or second automatic player piano **104** or to make selections presented in a user interface displayed on a display electrically connected to first automatic player piano **102** and/or second automatic player piano **104**, for example, through input interface **202** or communication interface **206**. First automatic player piano **102** and/or second automatic player piano **104** may have one or more input interfaces that use the same or a different input interface technology.

Computer-readable medium **204** is an electronic holding place or storage for information so that the information can be accessed by processor **208** as known to those skilled in the art. Computer-readable medium **204** can include, but is not limited to, any type of random access memory (RAM), any type of read only memory (ROM), any type of flash memory, etc. such as magnetic storage devices (e.g., hard disk, floppy disk, magnetic strips, . . .), optical disks (e.g., compact disk (CD), digital versatile disk (DVD), . . .), smart cards, flash memory devices, etc. First automatic player piano **102** and/or second automatic player piano **104** may have one or more computer-readable media that use the same or a different memory media technology. First automatic player piano **102** and/or second automatic player piano **104** also may have one or more drives that support the loading of a memory media such as a CD or DVD.

Communication interface **206** provides an interface for receiving and transmitting data between devices using various protocols, transmission technologies, and media as known to those skilled in the art. Communication interface **206** may support communication using various transmission media that may be wired or wireless. First automatic player piano **102** and/or second automatic player piano **104** may have one or more communication interfaces that use the same or a different communication interface technology. Data and messages may be transferred between first automatic player piano **102** and controller **106** using communication interface **206**. Data and messages also may be transferred between first automatic player piano **102** and double keyboard console **108** using communication interface **206**. Similarly, second automatic player piano **104** may include communication interface **206** to support communication with controller **106** and/or double keyboard console **108**.

Processor **208** executes instructions as known to those skilled in the art. The instructions may be carried out by a special purpose computer, logic circuits, or hardware circuits. Thus, processor **208** may be implemented in hardware, firmware, or any combination of these methods and/or in combination with software. The term "execution" is the process of running an application or the carrying out of the operation called for by an instruction. The instructions may be written using one or more programming language, scripting language, assembly language, etc. Processor **208** executes an instruction, meaning that it performs/controls the operations called for by that instruction. Processor **208** operably couples with output interface **200**, with input interface **202**, with computer-readable medium **204**, and with communication interface **206** to receive, to send, and to process information. Processor **208** may retrieve a set of instructions from a permanent memory device and copy the instructions in an executable form to a temporary memory device that is generally some form of RAM. First automatic player piano **102** and/or second automatic player piano **104** may include a plurality of processors that use the same or a different processing technology.

Control application **210** performs operations associated with processing the signals received from controller **106** and/or double keyboard console **108** and controlling the operation of the first plurality of controlled keys **112** and the plurality of controlled pedals **212** based on the processing of the signals

and the type of output interface **200** that controls the first plurality of controlled keys **112** and the plurality of controlled pedals **212**. The operations may be implemented using hardware, firmware, software, or any combination of these methods. With reference to the example embodiment of FIG. **2**, control application **210** is implemented in software (comprised of computer-readable and/or computer-executable instructions) stored in computer-readable medium **204** and accessible by processor **208** for execution of the instructions that embody the operations of control application **210**. Control application **210** may be written using one or more programming languages, assembly languages, scripting languages, etc.

With reference to FIG. **3**, a key **300** of the first plurality of controlled keys **112** is shown in accordance with an illustrative embodiment. Similarly, key **300** may be included in the second plurality of controlled keys **114**. Key **300** is mounted to an action mechanism **302** that is in turn positioned to strike a string (not shown) when key **300** is depressed by the pianist. As used in this disclosure, the term "mount" includes join, unite, connect, couple, associate, insert, hang, hold, affix, attach, fasten, bind, paste, secure, bolt, screw, rivet, solder, weld, glue, and other like terms. The phrases "mounted on" and "mounted to" include any interior or exterior portion of the element referenced. These phrases also encompass direct mounting (in which the referenced elements are in direct contact) and indirect mounting (in which the referenced elements are not in direct contact and are mounted together via intermediate elements). A variety of action mechanisms are known to a person of skill in the art. Thus, action mechanism **302** is shown for illustration only and is not intended to limit the application in any manner.

In the illustrative embodiment, action mechanism **302** is mounted to key **300** through a capstan screw **304** and includes a wippen **306**, a wippen flange rail **307**, a jack **308**, a regulating button **310**, a hammer flange rail **312**, a hammer shank **314**, a back check **316**, and a hammer **318**. Depression of key **300** causes capstan **304** to move upward which in turn causes wippen **306** to move upward and rotate about a first endpoint (not shown) of wippen **306** that is mounted for rotation to wippen flange rail **307**. Thus, action mechanism **302** is rotatable about the first endpoint of wippen **306**. Jack **308** is mounted for rotation about a second endpoint **320** of wippen **306**. As second endpoint **320** of wippen **306** is moved upward with the rotation caused by movement of capstan **304**, a first jack endpoint **322** of jack **308** moves upward until it contacts regulating button **310** releasing a jack knuckle **324**. Jack knuckle **324** moves upward and rotates hammer shank **314** about a flange endpoint **326** of hammer flange rail **312** thereby rotating hammer **318** relative to flange endpoint **326**. Hammer **318** strikes the string to generate the acoustic piano tone associated with key **300**. After striking the string, hammer **318** rebounds and is gently received by back check **316** on the way to the rest position after key **300** is released. Use of directional terms such as "up", "down", "upward", "downward", "left', "right", "front", "back", etc. is based on the arrangements illustrated in the figures. Of course, other arrangement directions may be used without limitation.

Processor **208** executing control application **210** may determine the key(s) or hammer(s) of the first plurality of controlled keys **112** to be moved based on the information included in the signals received from controller **106**. First automatic player piano **102** and/or second automatic player piano **104** may comprise an array of solenoid-operated key actuators and a servo-controller configured to trigger movement of one or more keys of the first plurality of controlled keys **112** such as key **300**. Plunger position sensors may provide plunger position signals representative of the current plunger positions to the servo-controller. The servo-controller determines the magnitude of a driving pulse signal to generate a target velocity for moving the plunger, and supplies the driving pulse signal to the solenoid-operated key actuator associated with the one or more keys to be played. When the solenoid-operated key actuator moves key **300**, key **300** actuates the action mechanism **302** causing hammer **318** to strike the string. Thus, in the illustrative embodiment, output interface **200** comprises the array of solenoid-operated key actuators and the servo-controller.

The plurality of controlled pedals **212** may vary as understood by a person of skill in the art. In an illustrative embodiment, where first automatic player piano **102** and/or second automatic player piano **104** comprise a grand piano, the plurality of controlled pedals **212** may include three pedals: an una corda pedal, a sostenuto pedal, and a damper pedal arranged from left to right, respectively. In other illustrative embodiments, a fewer or a greater number of pedals may be used. In the illustrative embodiment, the una corda pedal shifts the entire action/keyboard assembly to the right so that the hammers hit two of the three strings for each note played. In the illustrative embodiment, the sostenuto pedal raises any damper already raised at the moment the sostenuto pedal is depressed making it possible to sustain selected notes while the player's hands are free to play additional notes that are not sustained. In the illustrative embodiment, the damper pedal lifts the dampers from all keys, sustaining all played notes, and alters the overall tone by allowing all strings, including those not directly played, to reverberate.

With reference to FIG. **4**, a block diagram of controller **106** is shown in accordance with an illustrative embodiment. Controller **106** may include a second output interface **400**, a second input interface **402**, a second computer-readable medium **404**, a second communication interface **406**, a second processor **408**, and a key identification application **410**. Different and additional or fewer components may be incorporated into controller **106**. Controller **106** may include one or more computing devices of various types. The one or more computing devices may include computers of any form factor such as a personal digital assistant, a desktop, a laptop, an integrated messaging device, a smart phone, a tablet computer, etc.

Second output interface **400** provides an interface for outputting information for review or analysis by a user of controller **106**. Controller **106** may have one or more output interfaces that use the same or a different interface technology. For example, second output interface **400** may include an interface to a display **412**, a speaker, a printer, a database, etc. Display **412** may be a thin film transistor display, a light emitting diode display, a liquid crystal display, or any of a variety of different displays known to those skilled in the art. Display **412**, the speaker, the printer, and/or the database further may be accessible to controller **106** through second communication interface **406**. The same interface may support both second output interface **400** and second input interface **402**. For example, display **412** comprising a touch screen both allows the input and the output of information to controller **106**.

Second input interface **402** provides the same or similar functionality as that described with reference to input interface **202** of first automatic player piano **102**. The same interface may support both second output interface **400** and second input interface **402**. For example, display **412** comprising a touch screen both allows the input and the output of information to controller **106**. Second computer-readable medium **404** provides the same or similar functionality as that

described with reference to computer-readable medium **204** of first automatic player piano **102**. Second communication interface **406** provides the same or similar functionality as that described with reference to communication interface **206** of first automatic player piano **102**. Second communication interface **406** may support the transmission/reception of signals to/from double keyboard console **108**, first automatic player piano **102**, and/or second automatic player piano **104**. Second processor **408** provides the same or similar functionality as that described with reference to processor **208** of first automatic player piano **102**.

Key identification application **410** performs operations associated with processing the signals received from double keyboard console **108** and identifying the one or more keys of the first plurality of controlled keys **112** and/or the second plurality of controlled keys **114** and the plurality of controlled pedals **212** of first automatic player piano **102** and/or second automatic player piano **104** to be played. The operations may be implemented using hardware, firmware, software, or any combination of these methods. With reference to the example embodiment of FIG. **4**, key identification application **410** is implemented in software (comprised of computer-readable and/or computer-executable instructions) stored in second computer-readable medium **404** and accessible by second processor **408** for execution of the instructions that embody the operations of key identification application **410**. Key identification application **410** may be written using one or more programming languages, assembly languages, scripting languages, etc.

With reference to FIG. **5**, a block diagram of electronic components of double keyboard console **108** is shown in accordance with an illustrative embodiment. Double keyboard console **108** may include electronic components **514**, first keyboard **116**, second keyboard **118**, and a plurality of pedals **512**. Electronic components **514** may include a third output interface **500**, a third input interface **502**, a third computer-readable medium **504**, a third communication interface **506**, a third processor **508**, and a key/pedal encoding application **510**. Different and additional or fewer components may be incorporated into double keyboard console **108** and/or electronic components **514**.

Third output interface **500** provides the same or similar functionality as that described with reference to second output interface **400** of controller **106**. Third computer-readable medium **504** provides the same or similar functionality as that described with reference to computer-readable medium **204** of first automatic player piano **102**. Third communication interface **506** provides the same or similar functionality as that described with reference to communication interface **206** of first automatic player piano **102**. Third communication interface **506** may support the transmission/reception of signals to/from controller **106**, first automatic player piano **102**, and/or second automatic player piano **104**. Third processor **508** provides the same or similar functionality as that described with reference to processor **208** of first automatic player piano **102**.

Third input interface **502** provides an interface for creating signals indicating operation of the one or more keys of first keyboard **116**, of the one or more keys of second keyboard **118**, and of one or more of the plurality of pedals **512**. Third input interface **502** further may provide the same or similar functionality as that described with reference to input interface **202** of first automatic player piano **102**. Double keyboard console **108** may have one or more input interfaces that use the same or a different interface technology. In an illustrative embodiment, third input interface **502** includes sensors positioned to determine whether or not the one or more keys of first keyboard **116**, the one or more keys of second keyboard **118**, and/or the one or more of the plurality of pedals **512** has been depressed.

Key/pedal encoding application **510** performs operations associated with processing the signals received through input interface **502** into a form for output through communication interface **506**. The operations may be implemented using hardware, firmware, software, or any combination of these methods. With reference to the example embodiment of FIG. **5**, key/pedal encoding application **510** is implemented in software (comprised of computer-readable and/or computer-executable instructions) stored in third computer-readable medium **504** and accessible by third processor **508** for execution of the instructions that embody the operations of key/pedal encoding application **510**. Key/pedal encoding application **510** may be written using one or more programming languages, assembly languages, scripting languages, etc.

With reference to FIG. **6***a*, a side view of double keyboard console **108** is shown in accordance with an illustrative embodiment without first keyboard **116** and second keyboard **118** and their associated action mechanisms. With reference to FIG. **6***b*, a top, open view of double keyboard console **108** is shown in accordance with an illustrative embodiment without the one or more keys of first keyboard **116** and the one or more keys of second keyboard **118**, and their associated action mechanisms to illustrate the support structures. With reference to FIG. **6***c*, a side view of double keyboard console **108** is shown in accordance with an illustrative embodiment with a single key of first keyboard **116** and a single key of second keyboard **118** and their associated action mechanisms.

Double keyboard console **108** may include a housing **600**. Housing **600** may be formed of one or more materials including wood, hard plastic, metal, etc. Housing **600** may include a key bed **601**, a back wall **602**, a key slip **603**, a lid **604**, a fallboard **605**, a rim **606**, a key cover **607**, a first fallboard section **608**, a second fallboard section **609**, a left side wall **610**, a right side wall **611**, a hook **612**, and a key cover compartment **613**. Key bed **601**, back wall **602**, key slip **603**, lid **604**, key cover **607**, left side wall **610**, and right side wall **611** form an enclosure that supports and protects first keyboard **116**, second keyboard **118**, and their associated action mechanisms.

Key bed **601** provides a base for double keyboard console **108** and supports the internal components including first keyboard **116** and second keyboard **118** and their associated action mechanisms. Back wall **602** and key slip **603** extend up from opposite ends of key bed **601**. Key slip **603** is positioned between the pianist and the keys. Key slip **603** may be configured to be removed if removal of first keyboard **116** and/or of second keyboard **118** and their associated action mechanisms is desired. Left side wall **610** and right side wall **611** extend up from opposite ends of key bed **601** in a direction generally perpendicular to back wall **602** and key slip **603**. Rim **606** forms part of a top surface of left side wall **610** and right side wall **611** that extends up from first keyboard **116** and second keyboard **118**. Housing **600** is supported by a plurality of legs not shown.

In the illustrative embodiment of FIG. **6***a*, lid **604** is shown in a closed position. In the illustrative embodiment of FIG. **6***c*, lid **604** is shown in an open position. When double keyboard console **108** is played, lid **604** is in the closed position. Lid **604** may include fallboard **605**, a key cover compartment **613**, a first hammer strike board **647**, and a second hammer strike board **654**. In an illustrative embodiment, lid **604** may be open for construction and maintenance.

Fallboard **605** extends down from a first end of lid **604**. In the closed position, fallboard **605** is mounted to a plurality of first action brackets **643**. Fallboard **605** may include first fallboard section **608** and second fallboard section **609**. First fallboard section **608** mounts to and extends from lid **604**. Second fallboard section **609** mounts to and extends inward from first fallboard section **608** providing additional room for the one or more keys of second keyboard **118** while also positioning first main action mechanism **642** close to the pianist. Second fallboard section **609** may also serve as a key-stop rail for the one or more keys of second keyboard **118**. When used as a key-stop rail, second fallboard section **609** may be capped with felt. Additionally, fallboard **605** may be mounted to the plurality of first action brackets **643** to allow adjustment of the downward pressure of second fallboard section **609** on the one or more keys of second keyboard **118**. For example, fallboard **605** may mount to the plurality of first action brackets **643** using screws positioned at a downward angle.

In an illustrative embodiment, key cover **607** is used to cover first keyboard **116** and second keyboard **118**. In an illustrative embodiment, key cover **607** is an articulated screen. When finished playing, the pianist can pull key cover **607** out of key cover compartment **613** along slots in rim **606** towards key slip **603**. The slots in rim **606** may be positioned on each side of first keyboard **116** and second keyboard **118**.

Because double keyboard console **108** does not directly produce sound, there are no strings. In the absence of strings, first hammer strike board **647** and second hammer strike board **654** are mounted on an underside of lid **604**. In an illustrative embodiment, first hammer strike board **647** and second hammer strike board **654** are ribs aligned with a first hammer **644** and a second hammer **651** when lid **604** is in the closed position. First hammer strike board **647** and second hammer strike board **654** may be covered in felt or other suitable material to absorb noise from the hammer strikes.

Hook **612** may be used to support lid **604** in the open position. In an illustrative embodiment, double keyboard console **108** includes two hooks, one on each side of double keyboard console **108**. When not in use hook **612** may be housed in cavities carved into rim **606** on each side of double keyboard console **108**. The cavities may be shaped so that hook **612** remains tucked beneath a top edge of rim **606**.

Double keyboard console **108** further may include a plurality of support structures for supporting the one or more keys of first keyboard **116**, the one or more keys of second keyboard **118**, and the action mechanisms associated with each. The plurality of support structures may be formed of one or more materials including wood, hard plastic, metal, etc. The plurality of support structures are mounted within housing **600**. Thus, housing **600** is sized and shaped to accommodate the support structures and first keyboard **116**, second keyboard **118**, and the action mechanisms associated with each. In the illustrative embodiment, double keyboard console **108** may include a first upper keyboard side support **614**, a second upper keyboard side support **615**, a plurality of key frame struts **616**, a second front rail **617**, a second balance rail **618**, an upper action bracket support rail **619**, a second back rail **620**, a first upper front rail side bracket **621**, a second upper front rail side bracket **622**, a first front rail **623**, a first balance rail **624**, a first plurality of upper rail brackets **625**, a second plurality of upper rail brackets **626**, a third plurality of upper rail brackets **627**, a first back rail **628**, a plurality of lower action bracket balance posts **629**, and a back support rail **630**. A fewer or a greater number of support structures may be used based on the type of piano and the selected action mechanisms.

First upper keyboard side support **614** is mounted to left side wall **610** and to a leftmost of the plurality of key frame struts **616** to support second front rail **617**, second balance rail **618**, upper action bracket support rail **619**, and second back rail **620**, and thus, second keyboard **118** and its associated action mechanisms. Second upper keyboard side support **615** is mounted to right side wall **611** and to a rightmost of the plurality of key frame struts **616** and also supports second front rail **617**, second balance rail **618**, upper action bracket support rail **619**, and second back rail **620**, and thus, second keyboard **118** and its associated action mechanisms.

In an illustrative embodiment, the plurality of key frame struts **616** include six key frame struts, one at each end of first keyboard **116**, one at each break between keyboard registers, and one in a middle of a tenor section of first keyboard **116** as shown with reference to FIG. **6***b*.

The plurality of first action brackets **643** includes five brackets, two at each end and three at the register breaks. The plurality of first action brackets **650** also includes five brackets, two at each end and three at the register breaks. In the illustrative embodiment, the plurality of first action brackets **650** are shaped similarly to those included in a Steinway B Grand Piano manufactured by Steinway & Sons. Each bracket of the plurality of first action brackets **643** has a generally 90 degree arched shape that curves downward towards back wall **602**, and allows three action rails to be attached in the same relative positions as occur with the plurality of second action brackets **650**.

First front rail **623** may be positioned under a first end of each of the one or more keys of first keyboard **116** and extends generally parallel to key slip **603**. Second front rail **617** may be positioned under the first end of each of the one or more keys of second keyboard **118** and extends generally parallel to key slip **603**. As understood by a person of skill in the art, first front rail **623** and second front rail **617** may be capped with pins and felt disks to absorb the blow, for example, when a first key **634** or a second key **634**, respectively, is depressed. Second front rail **617** may also be positioned as the key stop for the one or more keys of first keyboard **116**. In the illustrative embodiment, second front rail **617** may be thickened to approximately 0.75 inches and covered underneath with felt or other suitable material.

First balance rail **624** may be positioned under a first balance pin **637** of each white key of the one or more keys of first keyboard **116** and under a second balance pin **638** of each black key of the one or more keys of first keyboard **116**. Second balance rail **618** may be positioned under a third balance pin **639** of each white key of the one or more keys of second keyboard **118** and a fourth balance pin **640** of each black key of the one or more keys of second keyboard **118**. First balance rail **624** may be longer than second balance rail **618** because first balance rail **624** may also support second front rail **617**.

A plurality of brackets may be used to support second front rail **617** above the one or more keys of first keyboard **116** without sagging. Second front rail **617** may be supported at each end by first upper front rail side bracket **621** and second upper front rail side bracket **622**. In an illustrative embodiment, first upper front rail side bracket **621** and second upper front rail side bracket **622** may be generally inverted "U" shaped brackets that are mounted over second front rail **617** at each end of second keyboard **118**. The plurality of brackets further may include the first plurality of upper rail brackets **625**. In an illustrative embodiment, the plurality of brackets has an "I" shape. A vertical portion of the "I" shape of the first plurality of upper rail brackets **625** may be slipped between the lower keys C and C# in each octave except for the first.

Shavings may be taken off of the edges of the adjacent keys to avoid friction. A lower tab of each of the first plurality of upper rail brackets **625** is mounted to first balance rail **624**. An upper tab of each of the brackets is mounted to second front rail **617**.

Upper action bracket support rail **619** supports a front foot of each of a plurality of second action brackets **650** that support a second main action mechanism **649** for each key of the one or more keys of second keyboard **118**. Upper action bracket support rail **619** is supported by the second plurality of upper rail brackets **626** at the register breaks and by first upper keyboard side support **614** and by second upper keyboard side support **615**.

First back rail **628** supports the one or more keys of first keyboard **116** at the back end and may be capped with felt. Second back rail **620** supports the one or more keys of second keyboard **118** at the back end and may be capped with felt. Second back rail **620** also supports a back foot of the plurality of second action brackets **650** that support second main action mechanism **649** at the register breaks. Second back rail **620** is supported by first upper keyboard side support **614** and by second upper keyboard side support **615** at each end and in between by the third plurality of upper rail brackets **627**.

In the illustrative embodiment, the second plurality of upper rail brackets **626** includes three arches positioned one at each register break. In an illustrative embodiment, the second plurality of upper rail brackets **626** are made of metal though this is not required. A top of each of the second plurality of upper rail brackets **626** has a flat surface to which both upper action bracket support rail **619** and second balance rail **618** are mounted. A foot at the end of each side of the arch of each of the second plurality of upper rail brackets **626** is mounted to a strut of three of the plurality of key frame struts **616**.

Back support rail **630** provides support under second back rail **620**, extends generally parallel to and adjacent back wall **602**, and is mounted to key bed **601**. In the illustrative embodiment, the third plurality of upper rail brackets **627** includes four brackets. The third plurality of upper rail brackets **627** are positioned along the four center axes defined by the plurality of key frame struts **616** to support second back rail **620** above back support rail **630**.

In the illustrative embodiment, the plurality of lower action bracket balance posts **629** include five posts to provide additional support for the plurality of first action brackets **643** to which fallboard **605** is mounted. The plurality of lower action bracket balance posts **629** may comprise narrow posts that mount to a front of the plurality of first action brackets **643**, extend through holes drilled through particular keys of both first keyboard **116** and second keyboard **118**, and rest on five of the six key frame struts **616**. A threaded approximately 0.75 inch ell at a top of each of the plurality of lower action bracket balance posts **629** allows insertion through an appropriate hole in the plurality of first action brackets **643** to fine tune its left-to-right position relative to first keyboard **116** and second keyboard **118** and to secure it with two nuts.

A first key **631** of first keyboard **116** is shown positioned relative to a second key **634** of second keyboard **118**. Second key **634** is positioned generally above first key **631**. In the illustrative embodiment of FIG. **6***c*, both first key **631** and second key **634** are shown in the depressed state. First key **631** and second key **634** are provided as illustration of the arrangement of the additional one or more keys of first keyboard **116** and second keyboard **118**, which is further illustrated in FIGS. **8***a*-**8***b*. First key **631** may have various lengths though in an illustrative embodiment, first key **631** is approximately 19 inches long as measured from key slip **603**. Second key **634** may have various lengths though in an illustrative embodiment, second key **634** is approximately 22 inches long.

A step **632** may be positioned on first key **631** of first keyboard **116** adjacent a first end of second key **634** of second keyboard **118** to facilitate playing on first keyboard **116** and second keyboard **118** simultaneously with a single hand. Step **632** positions each white key at the same level as the adjacent black keys. In an illustrative embodiment, step **632** has a height of approximately 0.5 inches and a length of approximately 0.75 inches. The black keys of first keyboard **116** may be notched in an area adjacent step **632**.

A wedge **635** may be positioned on second key **634** of second keyboard **118** to angle the one or more keys of second keyboard **118** upward also to facilitate playing on first keyboard **116** and second keyboard **118** simultaneously with a single hand. In an illustrative embodiment, wedge **635** is mounted at a front, visible end of second key **634** and has a total length of approximately 5.5 inches. Each black key of second keyboard **118** may be elevated so that its upper surface is parallel to the upper surface of the adjacent white notes. The distance from the front of the white keys to the front of the black keys may be shorter for second keyboard **118** than for first keyboard **116**.

Though dampers are superfluous in double keyboard console **108**, a metal weight may be placed at the back of each of the one or more keys of first keyboard **116** and of the one or more keys of second keyboard **118**. For example, a first weight **633** is positioned on a back end of first key **631**, and a second weight **636** is positioned on a back end of second key **634**. The size of each of first weight **633** and of second weight **636** is selected to fit within the space requirements and the mass is selected to match a real damper and to achieve the proper key balance and touch.

Each key of the one or more keys of first keyboard **116** is mounted to an action mechanism such as action mechanism **302** shown with reference to FIG. **3**. Similarly, each key of the one or more keys of second keyboard **118** is mounted to an action mechanism such as action mechanism **302** shown with reference to FIG. **3**. The action mechanisms may be simpler than those employed in pianos that strike strings though it may be desirable that the action mechanisms included in double keyboard console **108** recreate as exactly as possible the touch and feel of ordinary piano playing. It may also be desirable to employ readily-available action mechanism parts pre-built by manufacturers such as Yamaha Corporation or Steinway & Sons.

For illustration, FIG. **6***c* shows a first main action mechanism **642** mounted to first key **631** through a first capstan **641**, and a second main action mechanism **649** mounted to second key **634** through a second capstan **648**. The action mechanism for first key **631** may further include a first hammer **644**, a first back check **645**, and a first sensor **646**. The action mechanism for second key **634** may further include a second hammer **651**, a second back check **652**, and a second sensor **653**.

In an illustrative embodiment, second capstan **648** has a slightly longer than usual length of approximately 0.75 inches, while first capstan **641** has a length of approximately 3.25 inches and a diameter selected to pass through the one or more keys of second keyboard **118**, i.e. approximately ⅛ inch diameter at least at the section through the one or more keys of second keyboard **118**. As usual, the top ¼" of first capstan **641** and second capstan **648** includes a button for supporting a wippen, and has a hole that permits screwing in and out for adjustment. The button of first capstan **641** may be a separate, detachable piece that mates with a threaded tip of the narrow

midsection. A lower portion of first capstan **641** may have a wider diameter to increase its strength and be threaded for driving into first key **631**.

First hammer **644** and second hammer **651** may include standard felt hammer-heads though other suitable substitutes may be used with weights chosen to simulate the feel of a normal piano action through its various registers.

Second back check **652** is similar to that in a piano such as the Steinway B Grand Piano manufactured by Steinway & Sons except that the wire may be slightly longer. For example, a vertical elevation of a top of second back check **652** above second key **634** in a depressed position may be approximately 3 inches, as opposed to the usual 2.5 inches. First back check **645** projects upwards through second key **634**. As a result, a top of first back check **645** is positioned approximately 5.5 inches above first key **631** when first key **631** is in a depressed position. The position of various supporting structures may also dictate that first back check **645** attach to first key **631** approximately 0.5 inches from its back end, considerably closer than usual. Because of this, the normal method of adjusting back checks by bending the wire may not work well for first back check **645**. Instead, first back check **645** can be mounted by tightening or loosening a first screw mounted in a direction generally parallel to the wire of first back check **645** and/or a second screw mounted in a direction generally perpendicular to the first screw, adding punchings as necessary. The first screw and the second screw allow the position of first back check **645** to be fine tuned along both the up-and-down and back-and-forward axes. A vertical shaft of the wire of first back check **645** that passes through second key **634** may have a threaded top tip so that the top of first back check **645** can be screwed off or otherwise removed from the wire. The bottom tip of the vertical shaft may also be threaded to provide the option for removing it.

First sensor **646** detects the initial movement of first hammer **644** and sends the information to processor **508** which controls transmission of the information through communication interface **506** to controller **106** and/or first automatic player piano **102**. Second sensor **653** detects the initial movement of second hammer **651** and sends the information to processor **508** which controls transmission of the information through communication interface **506** to controller **106** and/or second automatic player piano **104**. First sensor **646** and second sensor **653** may be digital sensors that can detect the respective hammer's motion the instant it begins to rise and relay the information without delay. In an illustrative embodiment, first sensor **646** and second sensor **653** may be Disklavier™ Mark 4 Pro sensors manufactured by Yamaha Corporation. Processor **508** may determine a key number of each depressed/released key and may calculate a key velocity based on signals from first sensor **646** and/or second sensor **653**.

With reference to FIG. **7***a*, first key **631** and second key **634** are both shown in a released position. With reference to FIG. **7***b*, second key **634** is shown in a released position, and first key **631** is shown in a depressed position. With reference to FIG. **7***c*, first key **631** is shown in a released position, and second key **634** is shown in a depressed position. With reference to FIG. **7***d*, first key **631** and second key **634** are both shown in a depressed position.

With reference to FIG. **8***a*, first keyboard **116** and second keyboard **118** are shown in accordance with an illustrative embodiment. In the illustrative embodiment, first keyboard **116** and second keyboard **118** have the same arrangement of keys. With reference to FIG. **8***b*, first keyboard **116** is shown without second keyboard **118** for clarity. With reference to FIG. **8***c*, second keyboard **118** is shown without first keyboard **116** for clarity. First keyboard **116** and second keyboard **118** are arranged into four groups of keys as understood by a person of skill in the art. A first key group **800** may include the bass keys. A second key group **802** may include the tenor keys. A third key group **804** may include the treble keys. A fourth key group **806** may include the top keys. A first register break **808** is positioned between first key group **800** and second key group **802**. A second register break **810** is positioned between second key group **802** and third key group **804**. A third register break **812** is positioned between third key group **804** and fourth key group **806**. As a result, the keys of second key group **802** are generally straight, the keys of first key group **800** curve outward toward left side wall **610**, and the keys of third key group **804** and fourth key group **806** curve outward toward right side wall **611** to avoid the register breaks.

With reference to FIG. **9***a*, a top view of second key **634** is shown in accordance with an illustrative embodiment. With reference to FIG. **9***b*, a top view of first key **631** is shown in accordance with an illustrative embodiment. With reference to FIG. **9***c*, a top view of second key **634** overlaid on first key **631** is shown in accordance with an illustrative embodiment. For reference a fallboard contact point **900** is shown overlaid on second key **634**. Second key **634** includes a first opening **902** through which first capstan **641** extends, a second opening **904** through which a first wire support of first back check **645** extends, a first anchor point **906** indicates a point at which second capstan **648** is mounted to second key **634**, and a second anchor point **908** indicates a point at which back check **652** is mounted to second key **634**.

A first footprint **910** indicates a location of a foot of a first action bracket of the plurality of first action brackets **643**. A second footprint **912** indicates a location of a front foot of a second action bracket of the plurality of second action brackets **650**. A third footprint **914** indicates a location of a back foot of the second action bracket of the plurality of second action brackets **650**.

With reference to FIG. **10***a*, a top view of a first black key **1000** and a first white key **1002** of first keyboard **116** is shown in accordance with an illustrative embodiment. With reference to FIG. **10***b*, a top view of a second white key **1004**, a second black key **1006**, and a third white key **1008** of second keyboard **118** is shown in accordance with an illustrative embodiment. With reference to FIG. **10***c*, a top view of second white key **1004**, second black key **1006**, and third white key **1008** overlaid on first black key **1000** and first white key **1002** is shown in accordance with an illustrative embodiment. Second white key **1004**, second black key **1006**, third white key **1008**, first black key **1000**, and first white key **1002** are keys in first group **800** adjacent first register break **808** and are thus curved outward toward the left. The keys of third group **804** and fourth group **806** are similarly curved outward toward the right.

For reference a second fallboard contact point **1010** is shown overlaid on second white key **1004**, second black key **1006**, and third white key **1008**. Second white key **1004** includes a first opening **1012** through which first capstan **641** extends, a second opening **1014** through which a first wire support of first back check **645** extends, a first anchor point **1016** indicates a point at which second capstan **648** is mounted to second key **634**, and a second anchor point **1018** indicates a point at which back check **652** is mounted to second key **634**. Second black key **1006** and third white key **1008** have similar openings.

With reference to FIG. **11***a*, a front view of the plurality of pedals **512** of double keyboard console **108** is shown in accordance with an illustrative embodiment. With reference to

FIG. **11***b*, a left side view of the plurality of pedals **512** of double keyboard console **108** is shown in accordance with an illustrative embodiment. The plurality of pedals **512** are not connected to first keyboard **116** or second keyboard **118**. Instead, each of the plurality of pedals **512** pushes on a spring-loaded trapwork suspended from an underside of key bed **601** and associated with each of the plurality of pedals **512** is a sensor that mounts at a back of a pedal lyre.

In the illustrative embodiment, the plurality of pedals **512** include a first pedal **1122**, a second pedal **1124**, a third pedal **1126**, a fourth pedal **1128**, and a fifth pedal **1130** that are mounted to a frame **1100**. The front of each pedal of the plurality of pedals **512** is shown in FIG. **11***a*. First pedal **1122** may be used by the pianist as a damper pedal. Second pedal **1124** may be used by the pianist as a sostenuto pedal. Third pedal **1126** may be used by the pianist as a coupler pedal. Fourth pedal **1128** may be used by the pianist as an una corda pedal. Fifth pedal **1130** may be used by the pianist as a control pedal.

In an illustrative embodiment, each pedal is a standard component. First pedal **1122** may flare to the right. Fourth pedal **1128** and fifth pedal **1130** may flare to the left. Third pedal **1126** and fourth pedal **1128** may be generally straight. A locking mechanism may be associated with one or more of the plurality of pedals **512**. For example, a locking mechanism may be associated with second pedal **1124**, third pedal **1126**, and fourth pedal **1128**. As discussed previously, in an illustrative embodiment, where first automatic player piano **102** and/or second automatic player piano **104** comprise a grand piano, the plurality of controlled pedals **212** include the una corda pedal, the sostenuto pedal, and the damper pedal. In an illustrative embodiment, first pedal **1122**, second pedal **1124**, and fourth pedal **1128** control the operation of the respective damper pedal, sostenuto pedal, and una corda pedal of first automatic player piano **102** and/or second automatic player piano **104**.

In an illustrative embodiment, the distance from the right-most edge of double keyboard console **108** to first pedal **1122** is similar to a normal value of approximately 26 inches because the damper pedal is the most used pedal. Similarly, in an illustrative embodiment, the distance between each pedal and its adjacent pedals, except for fifth pedal **1130**, may be the same as on a normal piano, approximately 2.5 inches center to center. In an illustrative embodiment, the distance between fourth pedal **1128** and fifth pedal **1130** may be approximately twice that distance or approximately 5 inches center to center.

Frame **1100** may include a bottom bridge **1101**, a lyre top block **1102**, a first lyre pillar **1104**, a second lyre pillar **1106**, a lyre box **1108**, a lyre rod guide **1110**, a first lyre rod **1112**, a second lyre rod **1114**, a third lyre rod **1116**, a fourth lyre rod **1118**, a fifth lyre rod **1120**, a pedal plate **1132**, and a trapwork mechanism **1133**. A plurality of lyre sticks (not shown) may be mounted to the underside of key bed **601** to provide additional support for frame **1100**.

Bottom bridge **1101** is mounted to the underside of key bed **601**. Bottom bridge **1101** may have a variety of shapes and sizes selected to support lyre top block **1102**. In an illustrative embodiment, a front edge of bottom bridge **1101** is positioned along a line approximately 8 inches from a front of key bed **601**, and a right edge is positioned along a line approximately 20 inches from a right edge of key bed **601**.

Lyre top block **1102** is mounted to bottom bridge **1101**. In an illustrative embodiment, a back edge of lyre top block **1102** may align along the back edge of bottom bridge **1101**, and a right edge of lyre top block **1102** may be offset approximately 1.25 inches from the right edge of bottom bridge **1101**. First lyre pillar **1104** is mounted near the right edge of lyre top block **1102**. Second lyre pillar **1106** is mounted near a left edge of lyre top block **1102**. Lyre box **1108** is mounted to first lyre pillar **1104** on a right side and to second lyre pillar **1106** on a left side and includes a slot for each of the plurality of pedals **512**. Lyre rod guide **1110** is mounted between first lyre pillar **1104** and second lyre pillar **1106** and includes holes to accommodate first lyre rod **1112**, second lyre rod **1114**, third lyre rod **1116**, fourth lyre rod **1118**, and fifth lyre rod **1120**.

First lyre rod **1112** is mounted at a first end to a first trapwork **1134***a* and at a second end to a back edge of first pedal **1122**. Second lyre rod **1114** is mounted at a first end to a second trapwork **1134***b* and at a second end to a back edge of second pedal **1124**. Third lyre rod **1116** is mounted at a first end to a third trapwork **1134***c* and at a second end to a back edge of third pedal **1126**. Fourth lyre rod **1118** is mounted at a first end to a fourth trapwork **1134***d* and at a second end to a back edge of fourth pedal **1128**. Fifth lyre rod **1120** is mounted at a first end to a fifth trapwork **1134***e* and at a second end to a back edge of fifth pedal **1130**. In an illustrative embodiment, first lyre rod **1112**, second lyre rod **1114**, third lyre rod **1116**, fourth lyre rod **1118**, and fifth lyre rod **1120** have a height of approximately 21 inches and may be angled to align appropriately with the holes of lyre rod guide **1110**.

A plurality of sensors, one for each lyre rod, may be positioned to detect movement of first lyre rod **1112**, second lyre rod **1114**, third lyre rod **1116**, fourth lyre rod **1118**, and fifth lyre rod **1120**, resulting in a stream of data to processor **508** that can be processed by processor **508** and sent through communication interface **506** to controller **106** and/or first automatic player piano **102** and second automatic player piano **104**. In an illustrative embodiment, the plurality of sensors may be Disklavier™ Mark 4 Pro sensors manufactured by Yamaha Corporation. In an illustrative embodiment, the plurality of sensors are optical sensors though other types of sensors such as strain gauges may be used to detect the movement.

Pedal plate **1132** mounts to a front of lyre box **1108** and includes a slot for each of first pedal **1122**, second pedal **1124**, third pedal **1126**, fourth pedal **1128**, and fifth pedal **1130**. In an illustrative embodiment, a locking mechanism is provided for each of second pedal **1124**, of third pedal **1126**, and of fourth pedal **1128** so that the pedal can be kept in the down position indefinitely, or until the pianist gives the pedal an extra downward squeeze. For example, each of second pedal **1124**, of third pedal **1126**, and of fourth pedal **1128** may be capped with a spring-loaded lock that can be pushed by the pianist's toe into associated slots in pedal plate **1132** to engage the locking mechanism. A subsequent downward tap on the engaged pedal releases the spring out of its slot to release the pedal. The plurality of sensors may be configured to further detect engagement of the locking mechanisms.

In an illustrative embodiment, trapwork mechanism **1133** may include a plurality of trapwork blocks **1140** and a plurality of trapworks. In an illustrative embodiment, the plurality of trapwork blocks **1140** includes seven trapwork blocks. A trapwork block is positioned to the left of fifth pedal **1130**, to the right of first pedal **1122**, between first pedal **1122** and second pedal **1124**, between second pedal **1124** and third pedal **1126**, between third pedal **1126** and fourth pedal **1128**, and two trapwork blocks are positioned between fourth pedal **1128** and fifth pedal **1130** due to the increased spacing between these pedals. A back edge of each trapwork block of the plurality of trapwork blocks **1140** may be positioned approximately 1 inch from the back edge of key bed **601**.

First trapwork **1134***a*, second trapwork **1134***b*, third trapwork **1134***c*, fourth trapwork **1134***d*, and fifth trapwork **1134***e* may be standard components that are covered in felt to pre-

vent noisy collisions between each trapwork and key bed **601**. Associated with each of first trapwork **1134***a*, second trapwork **1134***b*, third trapwork **1134***c*, fourth trapwork **1134***d*, fifth trapwork **1134***e*, is a trapwork hook **1136** and a trapwork spring **1138**. Trapwork hook **1136** is configured to prevent excessive motion when the lyre is off and the piano is being moved. Trapwork spring **1138** is mounted to the underside of key bed **601**. The tension and positioning of each trapwork spring **1138** may be adjusted to create a normal feel in the absence of an actual, heavy mechanism within, for example, a standard grand piano.

In an illustrative embodiment, a first trapwork pivot pin **1142** is mounted between the trapwork blocks on either side of fifth pedal **1130** to allow rotation of fifth trapwork **1134***e* about first trapwork pivot pin **1142** under control of fifth pedal **1130**. In an illustrative embodiment, a second trapwork pivot pin (not shown) is mounted between the remaining trapwork blocks to allow rotation of first trapwork **1134***a*, second trapwork **1134***b*, third trapwork **1134***c*, and fourth trapwork **1134***d*, about the second trapwork pivot pin under control of the respective pedal **1122**, **1124**, **1126**, **1128**.

Third pedal **1126** and fifth pedal **1130** may be used to control a relationship between the keys activated on first automatic player piano **102** and those played by the pianist using first keyboard **116** and/or second keyboard **118**, and the keys activated on second automatic player piano **104** and those played by the pianist using second keyboard **118** and/or first keyboard **116**. Additionally, third pedal **1126** and fifth pedal **1130** may be used to control a relationship between the pedals of the plurality of pedals **212** that are activated on first automatic player piano **102** and/or on second automatic player piano **104**. In an illustrative embodiment, when electronic components **514** are powered on and start up, as understood by a person of skill in the art, first automatic player piano **102** may by default be controlled to play the same keys as those played by the pianist using first keyboard **116**. Second automatic player piano **104** may by default be controlled to play keys transposed up one octave from those played by the pianist using second keyboard **118**. If the pianist depresses third pedal **1126**, first automatic player piano **102** may be controlled to play both the same keys as those played by the pianist using first keyboard **116** and the keys transposed up one octave. The keys played by second automatic player piano **104** may be unaffected by depression of third pedal **1126**. Of course, other default behavior may be defined without limitation.

In an illustrative embodiment, while fifth pedal **1130** is down, the pianist may strike keys on either first keyboard **116** or second keyboard **118**, but no keys are played on either first automatic player piano **102** or second automatic player piano **104**. Instead, the keys that are played are analyzed by key identification application **410** executed by processor **408** and used to alter the future behavior of first automatic player piano **102** or second automatic player piano **104** and their respective plurality of controlled pedals **212**.

If, with fifth pedal **1130** down, the pianist strikes a single note on first keyboard **116** in the range C**16**-C**64**, subsequent keystrokes on first keyboard **116** cause first automatic player piano **102** to produce notes transposed by different intervals. As understood by a person of skill in the art, A**1** here refers to the lowest note of a standard piano keyboard, B♭ **2** refers to its immediate neighbor on the right, and so on through C **88** at the top of the keyboard. The key struck while fifth pedal **1130** is depressed represents the pitch that middle C henceforth produces. For example, if the pianist depresses A♭ **24** with fifth pedal **1130** down, first automatic player piano **102** may be controlled to play keys a major tenth lower than those played by the pianist using first keyboard **116**. If no other keys are depressed during the period that fifth pedal **1130** is down, the behavior of second automatic player piano **104** relative to the notes played on second keyboard **118** are unchanged, as is the behavior of first automatic player piano **102** when third pedal **1126** is engaged.

If, with fifth pedal **1130** down, the pianist strikes a single note on second keyboard **118** in the range C**16**-C**64**, the behavior of second automatic player piano **104** relative to notes played on second keyboard **118** can be altered in an analogous way, producing various degrees of transposition on second automatic player piano **104**.

If fifth pedal **1130** is depressed, and the pianist hits multiple notes on first keyboard **116**, the effect of third pedal **1126** on first keyboard **116** may be changed. If, as an example, a particular F♯ major chord is hit with fifth pedal **1130** down, from that point forward hitting middle C with third pedal **1126** engaged may produce the same chord on first automatic player piano **102**. Hitting other notes may produce the chord transposed by appropriate intervals. To restore third pedal **1126** to its default behavior, a selected one or more notes may be identified to trigger the default behavior again. For example, the pianist may play notes C**40** and C**52** concurrently with depression of fifth pedal **1130** to trigger the default behavior again.

If the pianist plays one or more notes on first keyboard **116**, one or more notes on second keyboard **118**, and depresses fifth pedal **1130** all at once, subsequent keystrokes on first keyboard **116** with third pedal **1126** down may produce one or more appropriately transposed notes on first automatic player piano **102**, enhanced by additional, appropriately transposed note or notes on second automatic player piano **104** as well.

In an illustrative embodiment, playing a single key outside the C**16**-C**64** range may cause activation of other special effects when fifth pedal **1130** is depressed. As a first example, the pianist playing B♭ **2** on first keyboard **116** when fifth pedal **1130** is depressed may reassign use of first pedal **1122**, second pedal **1124**, and fourth pedal **1128**. For example, depression of first pedal **1122** may henceforth control the damper pedal on only first automatic player piano **102**, depression of second pedal **1124** may henceforth control the damper pedal on only second automatic player piano **104**, and depression of third pedal **1128** may henceforth control the una corda pedal of both first automatic player piano **102** and second automatic player piano **104**.

As a second example, the pianist playing B**3** on first keyboard **116** may reassign use of the first pedal **1122**, second pedal **1124**, and fourth pedal **1128** such that depression of first pedal **1122** may henceforth control the damper pedal on both first automatic player piano **102** and second automatic player piano **104**, depression of second pedal **1124** may henceforth control the una corda pedal on only first automatic player piano **102**, and depression of fourth pedal **1128** may henceforth control the una corda pedal on only second automatic player piano **104**. As a third example, the pianist playing A**1** on first keyboard **116** may restore the default behavior of first pedal **1122**, second pedal **1124**, and fourth pedal **1128**. As a fourth example, the pianist playing C**88** on first keyboard **116** may restore the default transpositions relative to both first keyboard **116** and second keyboard **118**.

As should be clear from the above provided examples, key identification application **410** executing at controller **106** may be programmed to control a virtually endless set of transpositions between the notes played by first automatic player piano **102** and by second automatic player piano **104** under control of first keyboard **116**, second keyboard **118**, first pedal **1122**, second pedal **1124**, and fourth pedal **1128** using signals

indicating depression of third pedal **1126** and fifth pedal **1130** during the playing of a composition to trigger changes in the transpositions and the control of the pedals at each of first automatic player piano **102** and second automatic player piano **104**.

With reference to FIG. **12**, example operations associated with key identification application **410** are described. Of course, in another embodiment in which double keyboard piano system **100** does not include a controller **106**, some or all of the operations associated with key identification application **410** may be integrated into control application **210** and/or key/pedal encoding application **510**. Additional, fewer, or different operations may be performed depending on the embodiment. The order of presentation of the operations of FIG. **12** is not intended to be limiting. A user can interact with one or more user interface windows presented to the user in display **412** under control of key identification application **410** independently in an order selectable by the user. Thus, although some of the operational flows are presented in sequence, the various operations may be performed in various repetitions, concurrently, and/or in other orders than those that are illustrated. A user may execute key identification application **410** which causes presentation of a first user interface window, which may include a plurality of menus and selectors such as drop down menus, buttons, text boxes, hyperlinks, etc. associated with key identification application **410**.

In an operation **1200**, a transition program selection window is presented in display **412**. In an operation **1202**, a selection of a transition program to use is received. The transition program selection window for example may include a list of transition programs from which the user may select. The selected transition program defines the key(s)/pedal(s) to be played by first automatic player piano **102** and/or second automatic player piano **104** based on the key(s)/pedal(s) played by the pianist at double keyboard console **108** and the currently active transition logic. As discussed above, use of fifth pedal **1130** may cause the currently active transition logic to change. As an example, the selected transition program may include computer-readable and/or computer-executable instructions that provide for a translation between keys that have been played at double keyboard console **108** and those to actually play to create sound at first automatic player piano **102** and/or second automatic player piano **104**. The selected transition program, for example, may include a lookup table indexed by the key(s) played when fifth pedal **1130** is depressed (operated) that defines a key translation as a constant shift or other mathematical shift. The currently active transition logic is the constant shift or other mathematical shift applied between keys.

In an operation **1204**, a signal is received from double keyboard console **108** which includes information describing the keys played by the pianist using first keyboard **116** and/or second keyboard **118** and/or describing the pedal(s) of the plurality of pedals **512** depressed by the pianist.

In an operation **1206**, a determination is made concerning whether or not the received information indicates that fifth pedal **1130** is being depressed by the pianist. If the determination is made that fifth pedal **1130** is not being depressed by the pianist, processing continues in an operation **1208**. If the determination is made that fifth pedal **1130** is being depressed by the pianist, processing continues in an operation **1218**.

In operation **1208**, a determination is made concerning whether or not the received information indicates that third pedal **1126** is being depressed by the pianist. If the determination is made that third pedal **1126** is not being depressed by the pianist, processing continues in an operation **1210**. If the determination is made that third pedal **1126** is being depressed by the pianist, processing continues in an operation **1214**. In operation **1210**, the key and/or pedal depressed is determined from the received information and the currently active transition logic is applied to determine the key and/or pedal to trigger at either first automatic player piano **102** and/or second automatic player piano **104**. In an operation **1212**, information including the determined key and/or pedal to trigger at either first automatic player piano **102** and/or second automatic player piano **104** is sent to the appropriate player piano, and processing continues at operation **1204** to process the next received signal.

In operation **1214**, the key and/or pedal depressed is determined from the received information. The portion of the currently active transition logic that pertains to the intervals of transposition when third pedal **1126** is depressed is then applied to determine the key(s) and/or pedal to trigger at either first automatic player piano **102** and/or second automatic player piano **104**. In an operation **1216**, information including the determined keys to trigger at first automatic player piano **102** is sent to first automatic player piano **102**, and processing continues at operation **1204** to process the next received signal.

In operation **1218**, the key(s) depressed on first keyboard **116** and/or second keyboard **118** is captured. In an operation **1220**, a determination is made concerning whether or not the received information indicates that fifth pedal **1130** is not being depressed by the pianist. If the determination is made that fifth pedal **1130** is not being depressed by the pianist, processing continues in an operation **1222**. If the determination is made that fifth pedal **1130** is being depressed by the pianist, processing continues in operation **1218** to continue to capture the keys played while fifth pedal **1130** is depressed. In operation **1222**, the key(s) depressed while fifth pedal **1130** was depressed is determined from the received information. The captured key(s) is compared, for example, to the lookup table. The transition logic associated with the captured key(s) is selected and the currently active transition logic is switched to the selected transition logic. Of course, if there is no match between the captured key(s) and the table entries, the currently active transition logic may not be switched. Processing continues at operation **1204** to process the next received signal.

The word "illustrative" is used herein to mean serving as an example, instance, or illustration. Any aspect or design described herein as "illustrative" is not necessarily to be construed as preferred or advantageous over other aspects or designs. Further, for the purposes of this disclosure and unless otherwise specified, "a" or "an" means "one or more". Still further, the use of "and" or "or" is intended to include "and/or" unless specifically indicated otherwise. The illustrative embodiments may be implemented as a method, apparatus, or article of manufacture using standard programming and/or engineering techniques to produce software, firmware, hardware, or any combination thereof to control a computer to implement the disclosed embodiments.

The foregoing description of illustrative embodiments of the invention has been presented for purposes of illustration and of description. It is not intended to be exhaustive or to limit the invention to the precise form disclosed, and modifications and variations are possible in light of the above teachings or may be acquired from practice of the invention. The embodiments were chosen and described in order to explain the principles of the invention and as practical applications of the invention to enable one skilled in the art to utilize the invention in various embodiments and with various modifications as suited to the particular use contemplated. It is

intended that the scope of the invention be defined by the claims appended hereto and their equivalents.

What is claimed is:

1. A double keyboard piano system comprising:

a first automatic player piano;

a second automatic player piano; and

a double keyboard console including a first keyboard and a second keyboard mounted above the first keyboard,

wherein the first automatic player piano is in communication with the double keyboard console to receive a first signal including first information describing a first key for the first automatic player piano to automatically play based on a first key of the first keyboard being played,

wherein the second automatic player piano is in communication with the double keyboard console to receive a second signal including second information describing a second key for the second automatic player piano to automatically play based on a second key of the second keyboard being played;

wherein the first key has a first action mechanism, and further wherein a hammer of the first action mechanism strikes a sound absorbing structure.

2. The double keyboard piano system of claim **1**, wherein the first automatic player piano is in communication with the double keyboard console to receive a third signal including third information describing a first pedal for the first automatic player piano to automatically operate based on a first pedal of the double keyboard console being operated.

3. The double keyboard piano system of claim **2**, wherein the second automatic player piano is in communication with the double keyboard console to receive a fourth signal including fourth information describing a second pedal for the second automatic player piano to automatically operate based on the first pedal of the double keyboard console being operated.

4. The double keyboard piano system of claim **3**, wherein the first pedal of the first automatic player piano causes a different musical effect than the second pedal of the second automatic player piano.

5. The double keyboard piano system of claim **1**, wherein the first automatic player piano is in direct communication with the double keyboard console.

6. The double keyboard piano system of claim **1**, further comprising a controller in communication with the double keyboard console and the first automatic player piano, wherein the first automatic player piano communicates with the double keyboard console through the controller.

7. The double keyboard piano system of claim **1**, wherein the double keyboard console further includes a pedal and the first signal includes an indicator of operation of the pedal at the double keyboard console, wherein operation of the pedal causes the first automatic player piano to simultaneously play the described first key and a third key that is one octave above the described first key.

8. The double keyboard piano system of claim **7**, wherein the double keyboard console further includes a sensor positioned and configured to detect operation of the pedal.

9. The double keyboard piano system of claim **8**, wherein the double keyboard console further includes a communication interface configured to send the first signal to the first automatic player piano.

10. The double keyboard piano system of claim **1**, wherein the double keyboard console further includes a sensor positioned and configured to detect playing of the first key of the first keyboard.

11. The double keyboard piano system of claim **10**, wherein the double keyboard console further includes a communication interface configured to send the first signal to the first automatic player piano.

12. The double keyboard piano system of claim **1**, wherein the second key is mounted above the first key, and the second key has a second action mechanism separate from the first action mechanism.

13. The double keyboard piano system of claim **1**, wherein the double keyboard console does not produce musical sound separate from the sound the first automatic player piano and the second automatic player piano produce.

14. The double keyboard piano system of claim **1**, wherein the described first key for the first automatic player piano is different than the first key played at the first keyboard.

15. The double keyboard piano system of claim **1**, wherein the double keyboard console further comprises:

a sensor positioned and configured to detect playing of the first key;

a communication interface;

a processor; and

a computer-readable medium operably coupled to the processor, the computer-readable medium having computer-readable instructions stored thereon that, when executed by the processor, cause the double keyboard console

to receive an indicator from the sensor indicating that the first key has been played;

in response to receipt of the indicator, to create a message indicating that the first key has been played; and

to send the created message to the communication interface for transmission.

16. The double keyboard piano system of claim **15**, further comprising a controller, wherein the controller comprises:

a second communication interface configured to receive the created message from the double keyboard console and to send the first signal;

a second processor; and

a second computer-readable medium operably coupled to the second processor, the second computer-readable medium having second computer-readable instructions stored thereon that, when executed by the second processor, cause the controller

to process the received message to determine that the first key has been played using the first keyboard;

to determine the first key for the first automatic player piano to automatically play based on an active transition logic and the determination that the first key has been played using the first keyboard;

to create a second message indicating that the first automatic player piano play the determined first key; and

to send the created second message to the second communication interface for transmission.

17. The double keyboard piano system of claim **16**, wherein the double keyboard console further comprises a pedal and a sensor positioned and configured to detect operation of the pedal, wherein one or more keys played while the pedal is operated are not played at either the first automatic player piano or the second automatic player piano.

18. The double keyboard piano system of claim **16**, wherein the double keyboard console further comprises a pedal and a sensor positioned and configured to detect operation of the pedal, wherein one or more keys are played while the pedal is operated.

19. The double keyboard piano system of claim **18**, wherein the one or more keys played while the pedal is operated are included in one or more messages sent to the controller.

20. The double keyboard piano system of claim **19**, wherein the second computer-readable instructions further cause the controller to switch the active transition logic to a second transition logic indentified based on the one or more keys played while the pedal is operated.

* * * * *