US008317795B2

(12) **United States Patent**
Edwards et al.

(10) **Patent No.: US 8,317,795 B2**
(45) **Date of Patent: Nov. 27, 2012**

(54) **SYSTEM AND METHOD OF BONE COMPRESSION AND FIXATION**

(75) Inventors: **Scott G. Edwards**, McLean, VA (US); **Ronald Yapp**, Manchester, MI (US)

(73) Assignee: **Scott G. Edwards**, McLean, VA (US)

(*) Notice: Subject to any disclaimer, the term of this patent is extended or adjusted under 35 U.S.C. 154(b) by 1465 days.

(21) Appl. No.: **11/859,009**

(22) Filed: **Sep. 21, 2007**

(65) **Prior Publication Data**

US 2008/0077154 A1 Mar. 27, 2008

Related U.S. Application Data

(60) Provisional application No. 60/846,100, filed on Sep. 21, 2006.

(51) **Int. Cl.**
A61F 2/46 (2006.01)

(52) **U.S. Cl.** ..... **606/86 R**

(58) **Field of Classification Search** ..... 606/74, 606/86 R, 217, 232, 324
See application file for complete search history.

(56) **References Cited**

U.S. PATENT DOCUMENTS

4,409,974	A		10/1983	Freedland
4,741,330	A		5/1988	Hayhurst
5,306,290	A		4/1994	Martins et al.
5,370,646	A		12/1994	Reese et al.
5,810,848	A	*	9/1998	Hayhurst 606/144
5,893,850	A		4/1999	Cachia
5,921,986	A		7/1999	Bonutti
6,045,551	A		4/2000	Bonutti
6,068,648	A		5/2000	Cole et al.
6,102,934	A	*	8/2000	Li 606/232
6,117,160	A		9/2000	Bonutti
6,228,096	B1	*	5/2001	Marchand 606/139
6,238,395	B1		5/2001	Bonutti
6,368,326	B1		4/2002	Dakin et al.
6,402,757	B1	*	6/2002	Moore et al. 606/80
6,544,267	B1		4/2003	Cole et al.
6,761,722	B2		7/2004	Cole et al.
7,273,481	B2		9/2007	Dakin et al.
2002/0188297	A1		12/2002	Dakin et al.
2004/0010257	A1		1/2004	Cachia et al.
2004/0044364	A1		3/2004	DeVries et al.
2004/0097939	A1		5/2004	Bonutti
2004/0127907	A1		7/2004	Dakin et al.
2005/0033366	A1		2/2005	Cole et al.
2006/0229623	A1		10/2006	Bonutti et al.

OTHER PUBLICATIONS

International Search Report for PCT/US2007/079124 completed on Mar. 20, 2008.

* cited by examiner

Primary Examiner — Kevin T Truong
Assistant Examiner — Michael Araj
(74) *Attorney, Agent, or Firm* — Alston & Bird LLP

(57) **ABSTRACT**

A tension member installation and tensioning device and method for stabilizing a bone are provided. The device includes a barrel that houses a tension member with a leading element attached to the leading end of the tension member. The barrel of the device is inserted into a hole drilled through a bone until the barrel is beyond the distal cortex of the bone. The leading element is then engaged with the distal cortex. The leading element may be released from within the barrel or otherwise expanded to engage the distal cortex. The barrel is then retracted from the hole, and tension is applied to the tension member via a tensioning mechanism to attach a terminal element to a trailing portion of the tension member when a predetermined tension is achieved. The device may include a trigger for actuating the tensioning mechanism and a cutter for severing the tension member.

23 Claims, 13 Drawing Sheets

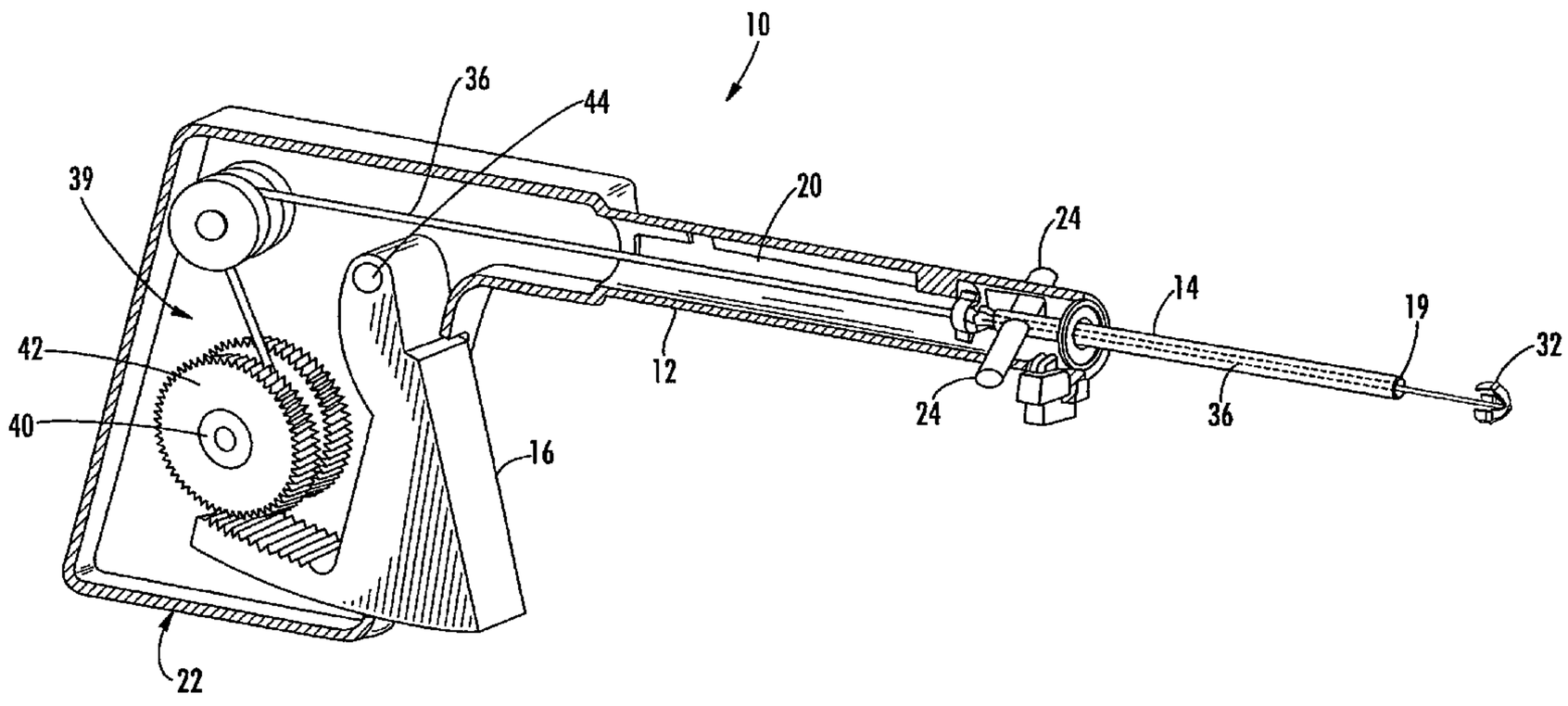

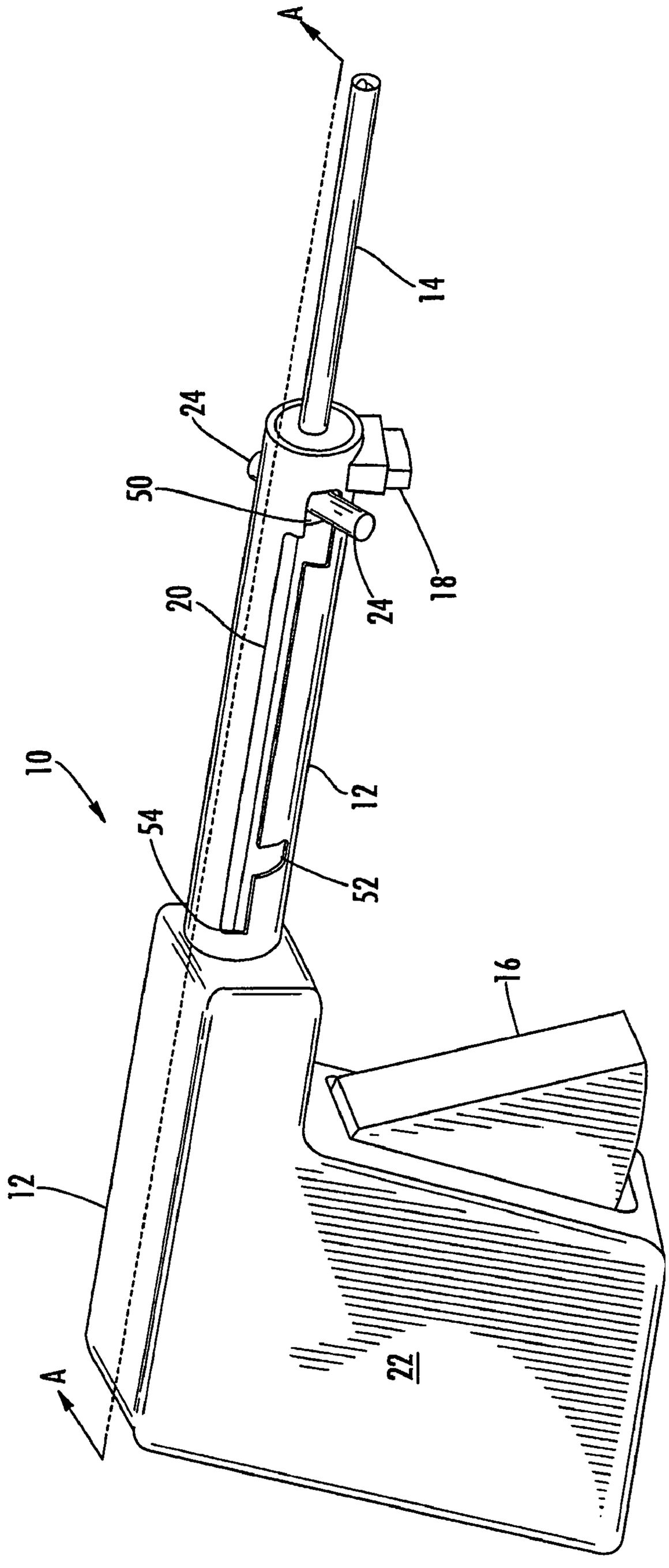

FIG. 1

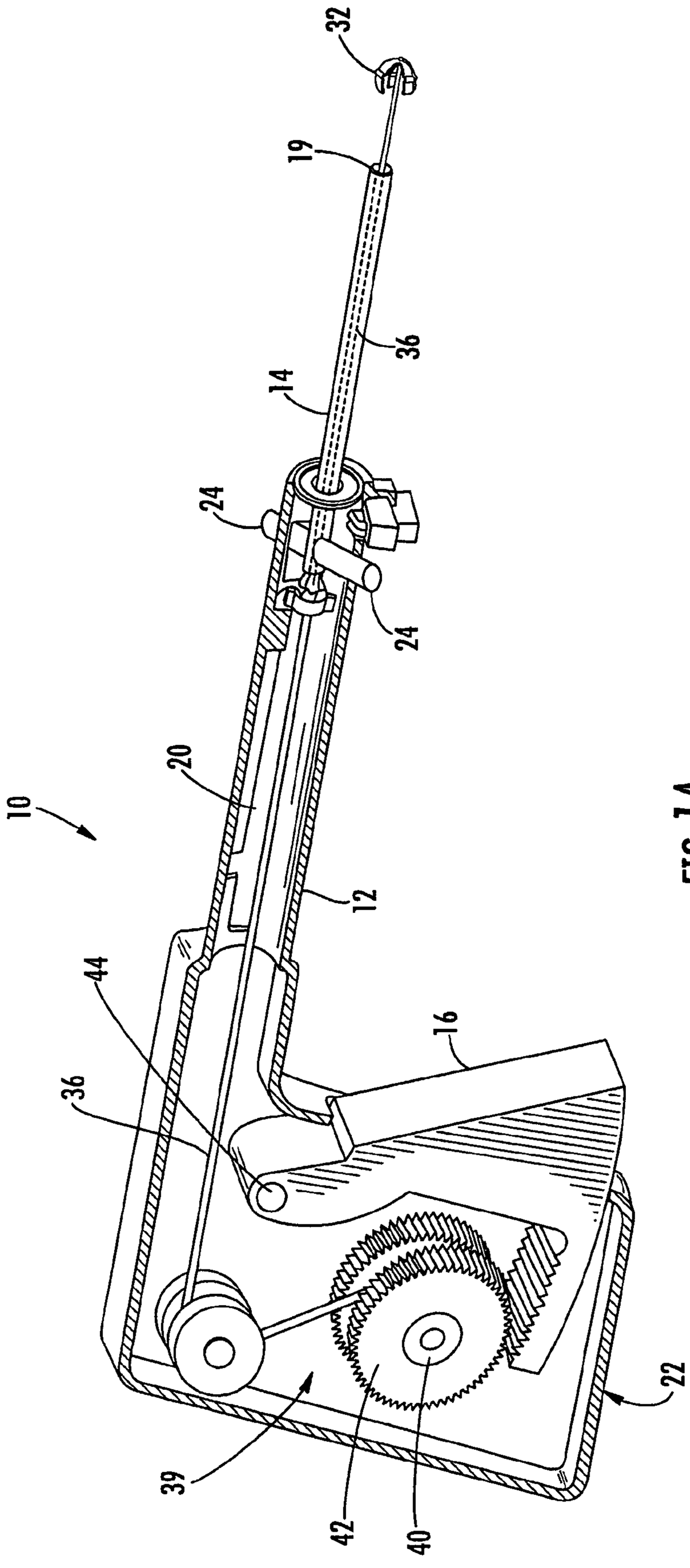

FIG. 1A

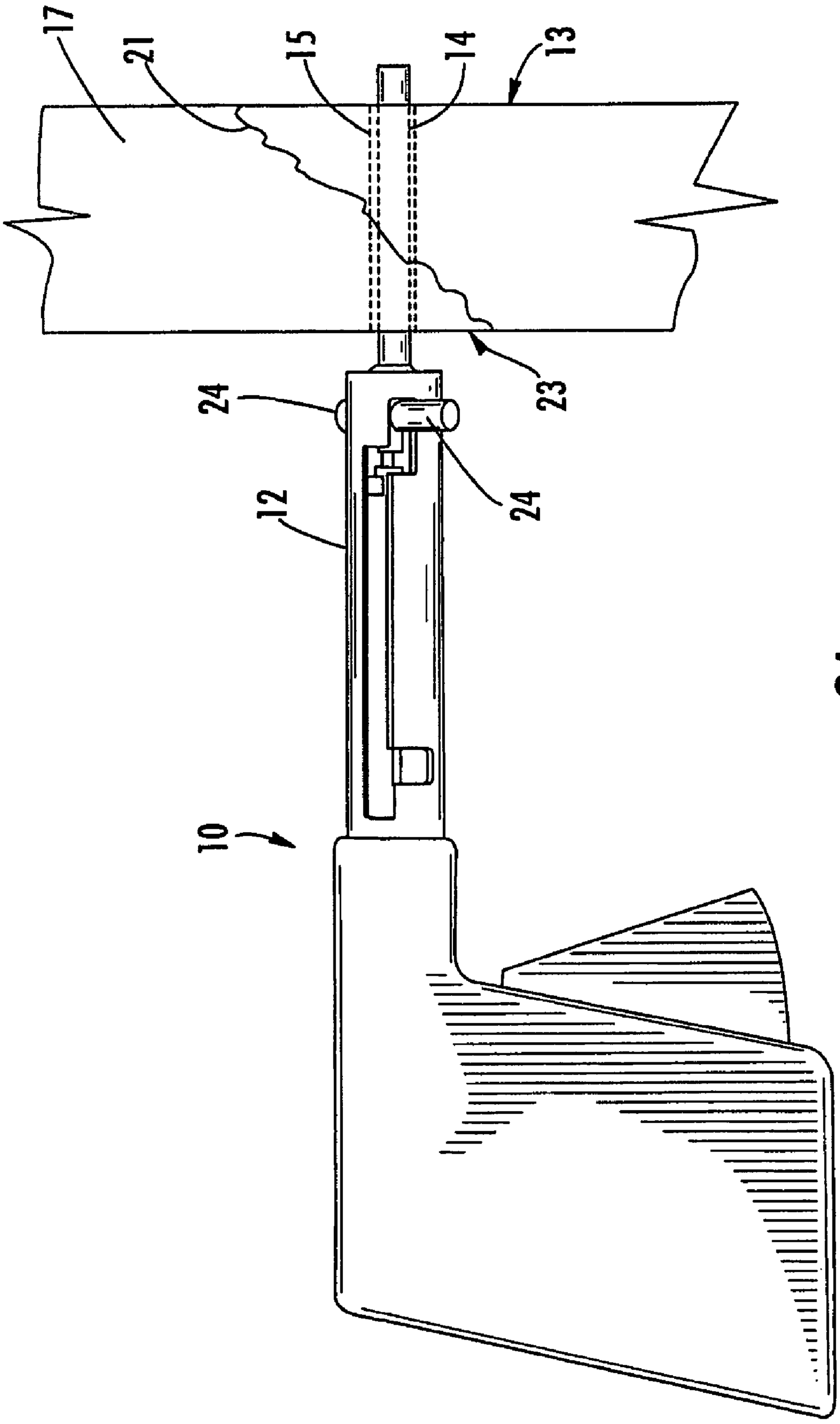

FIG. 2A

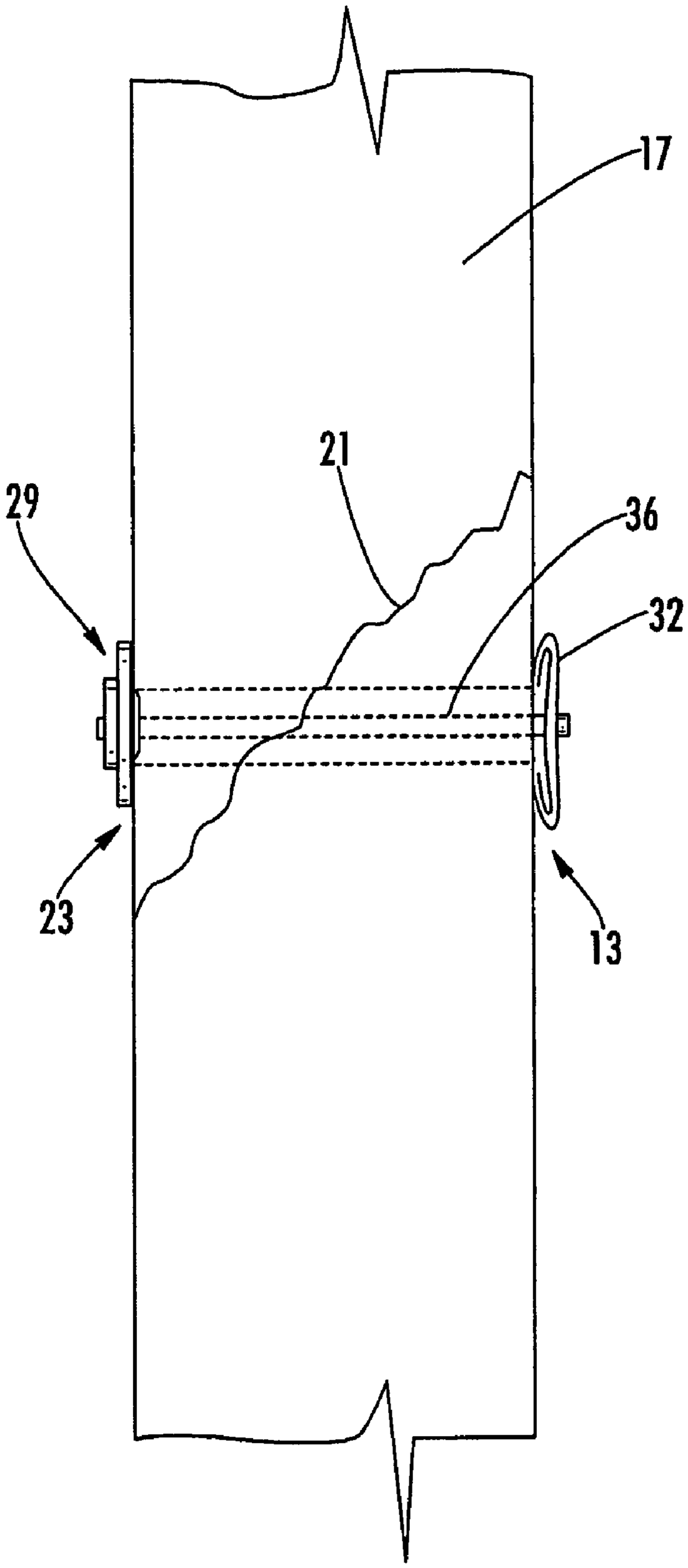

FIG. 2B

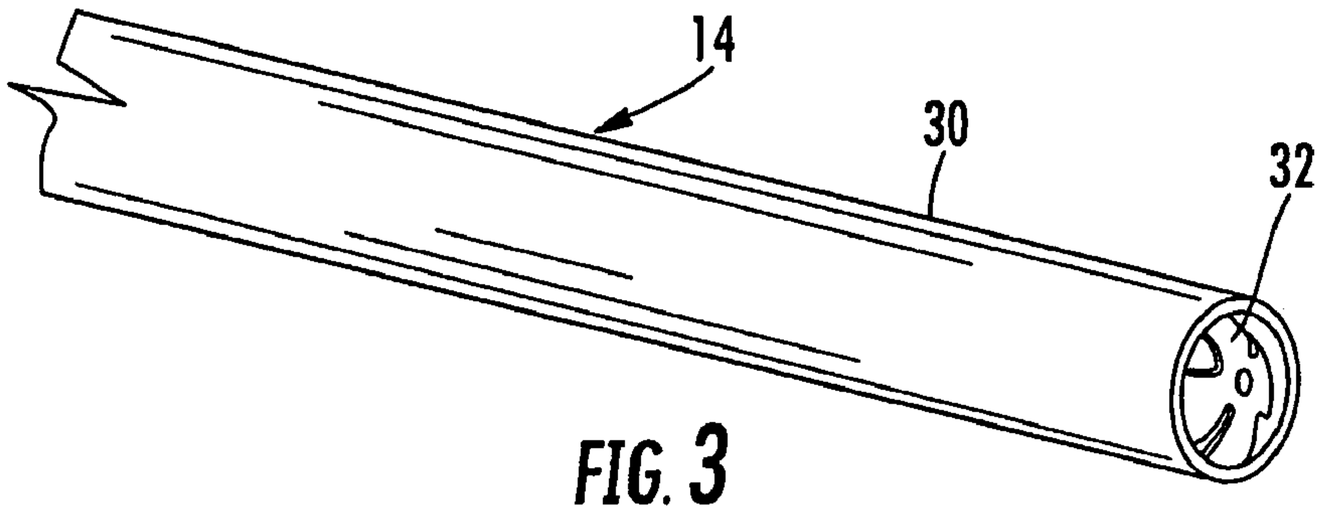

FIG. 3

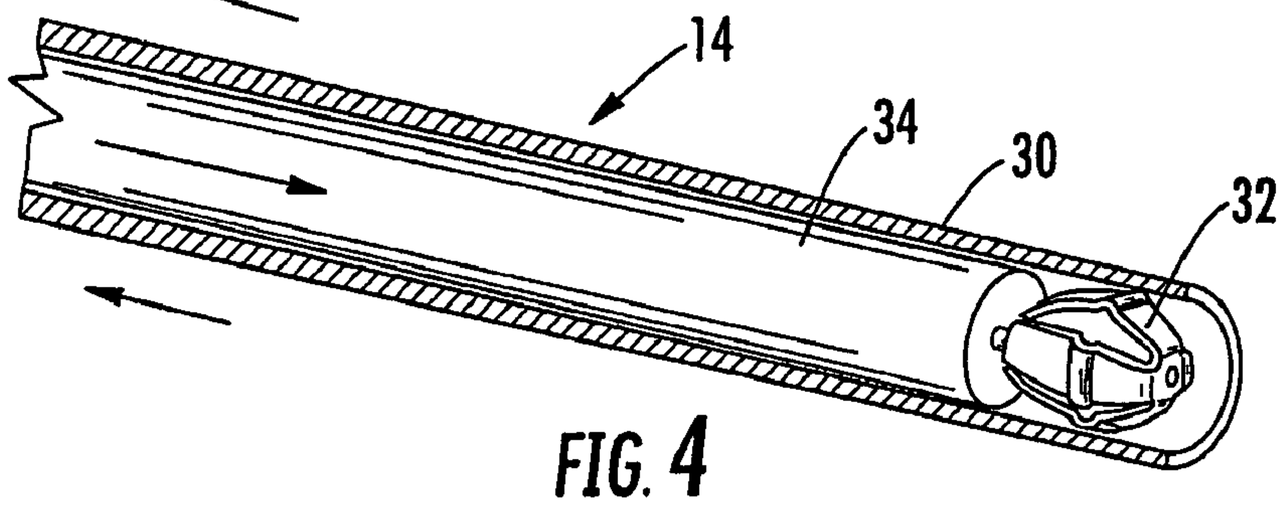

FIG. 4

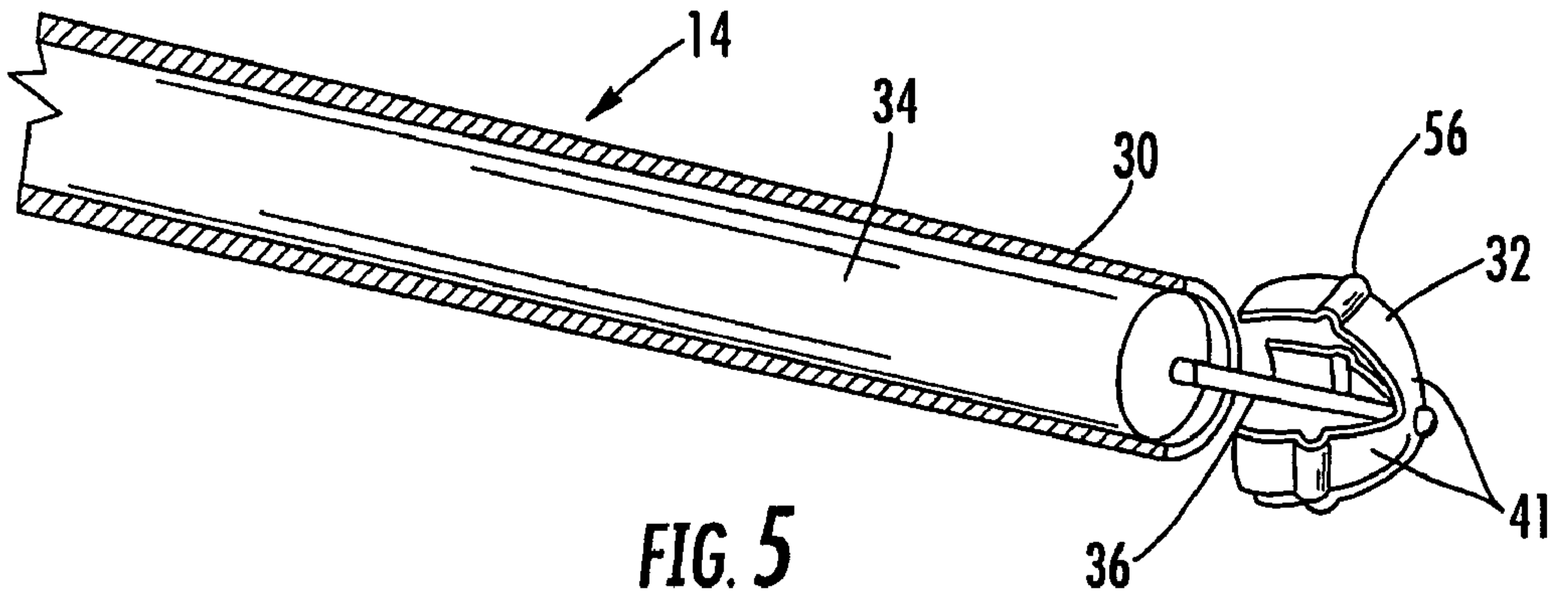

FIG. 5

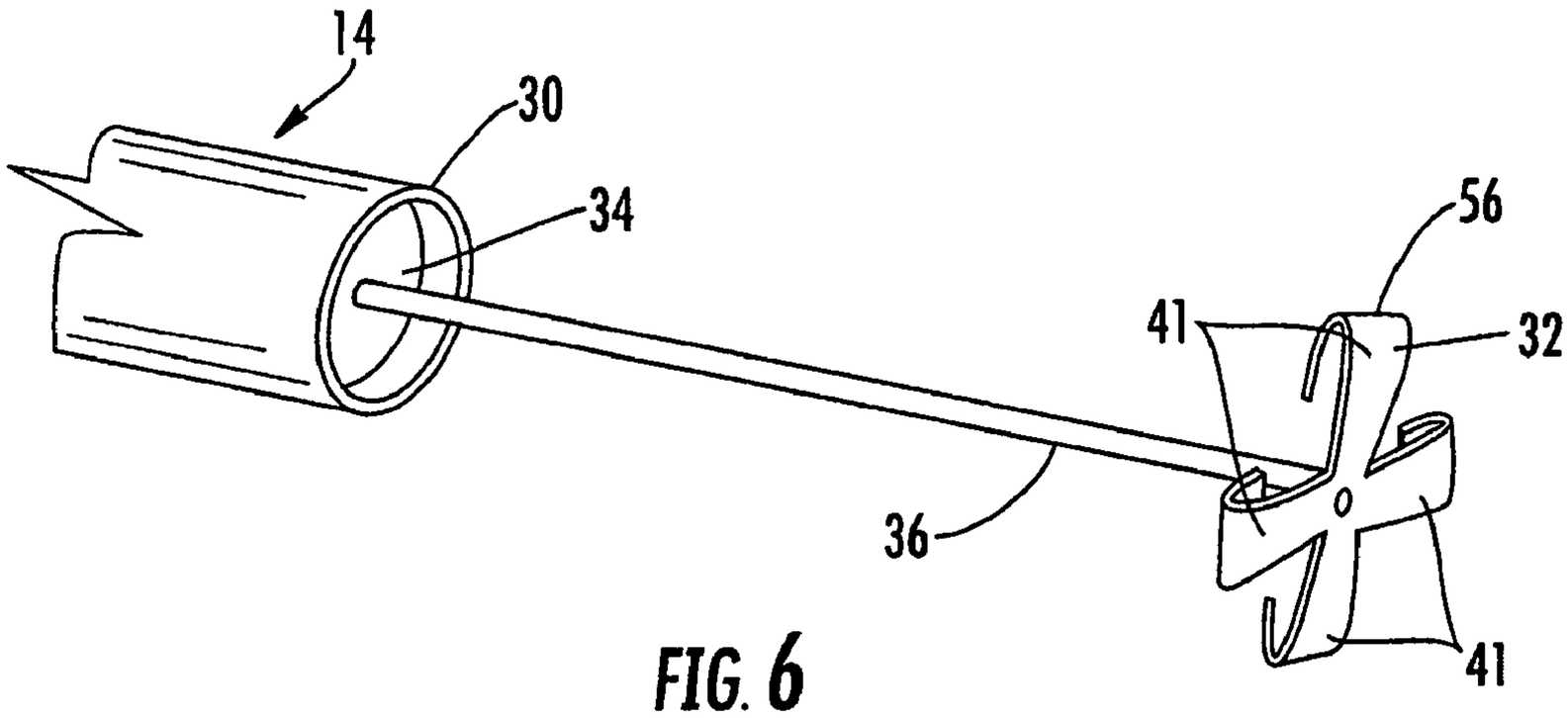

FIG. 6

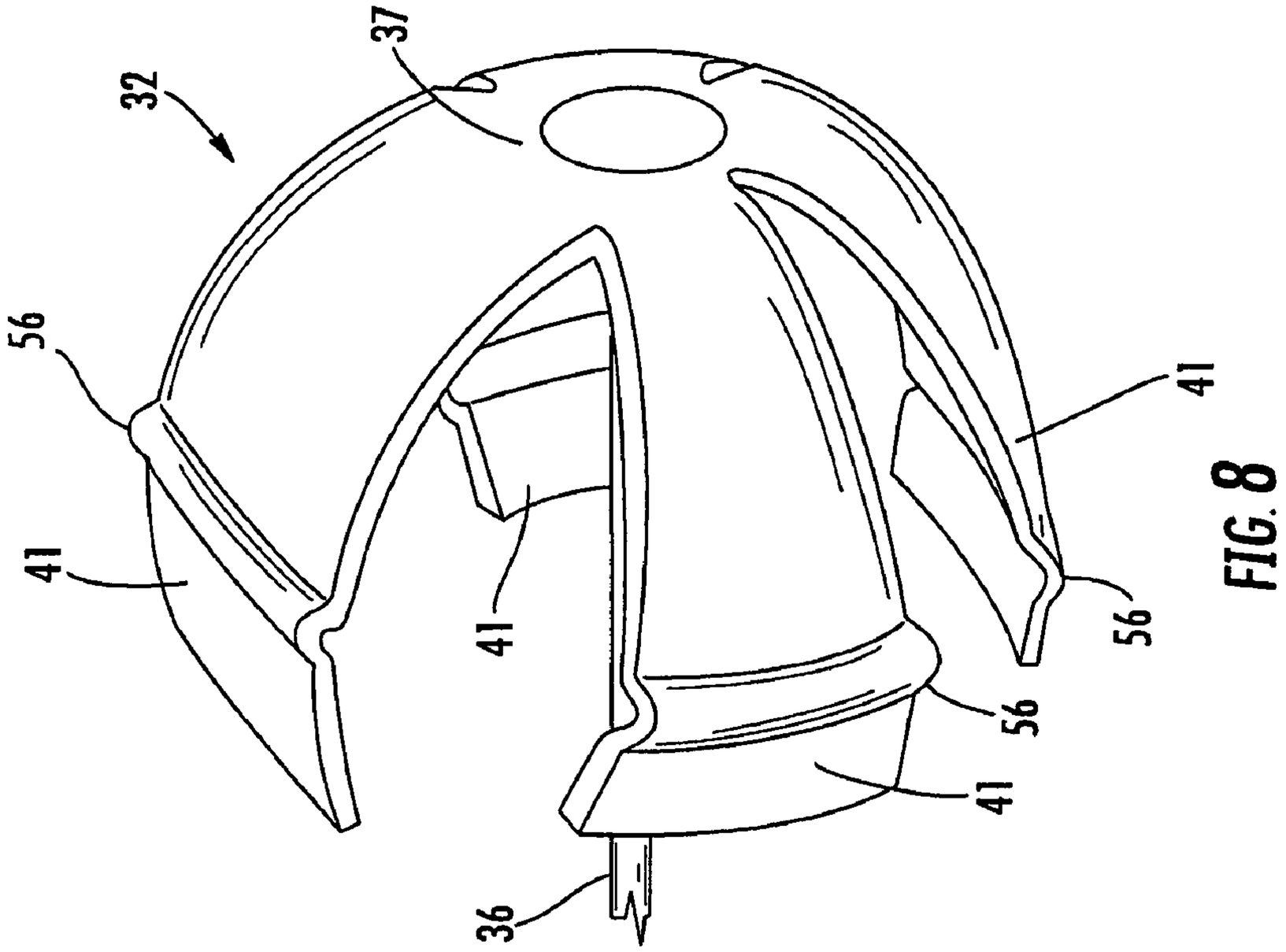

FIG. 8

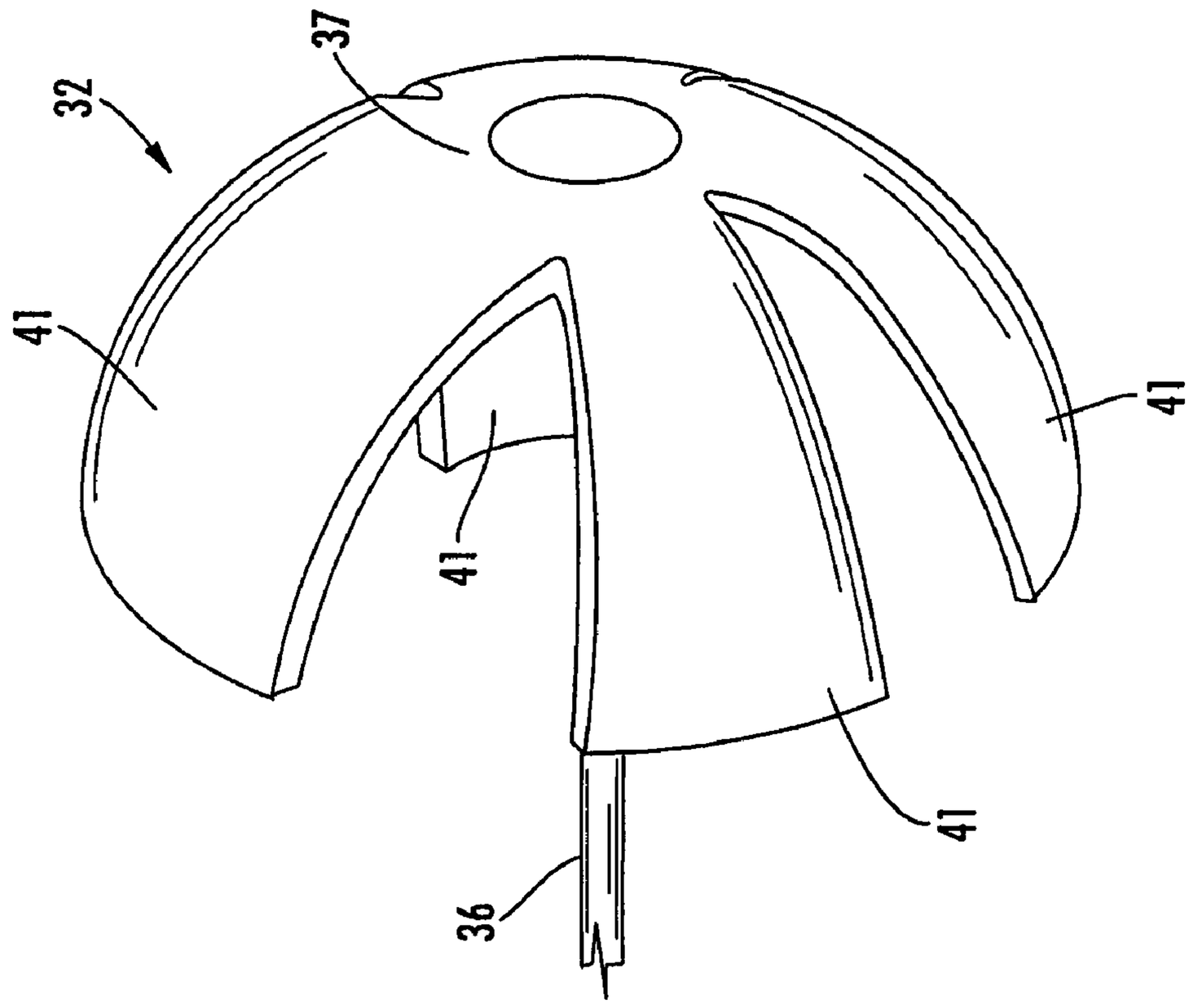

FIG. 7

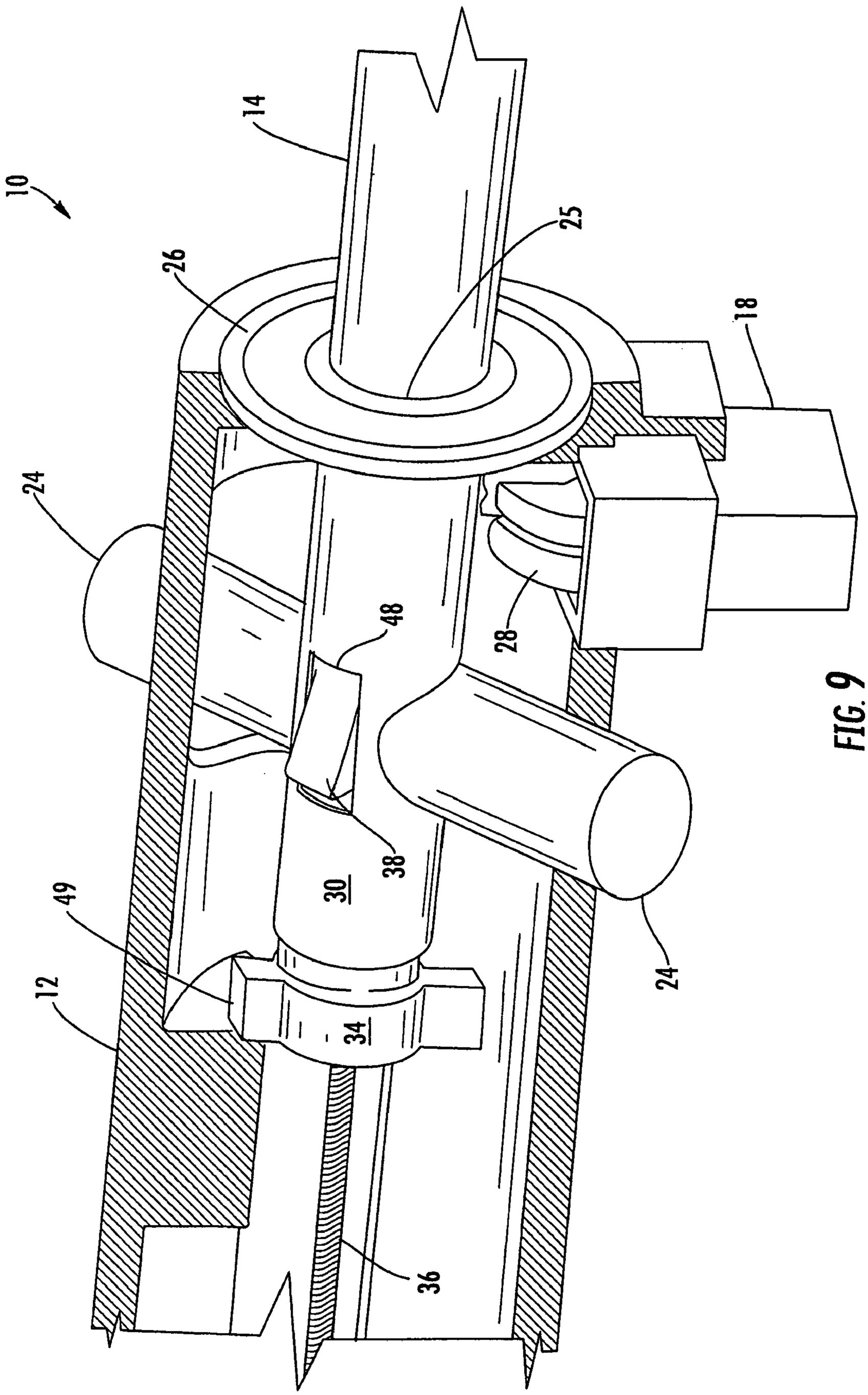

FIG. 9

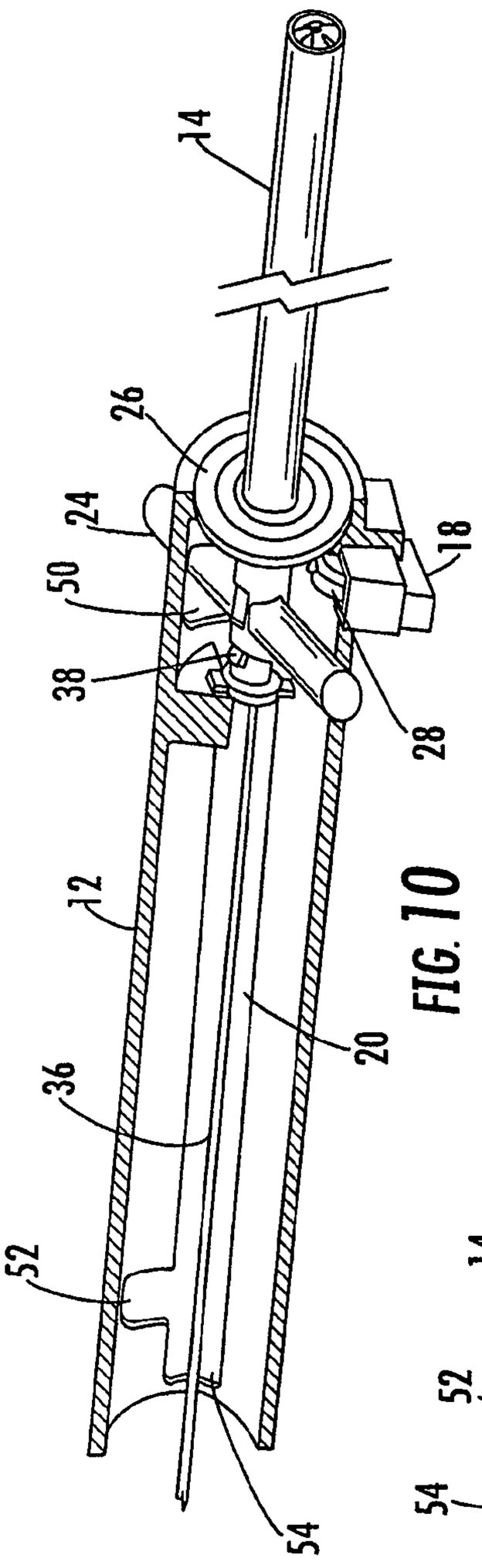

FIG. 10

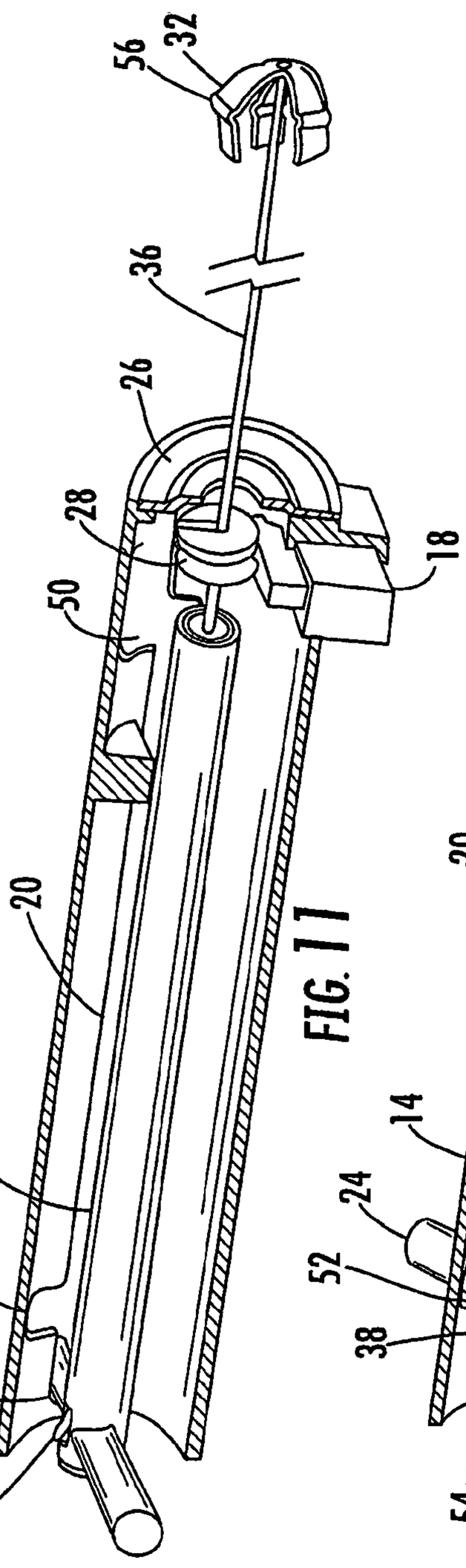

FIG. 11

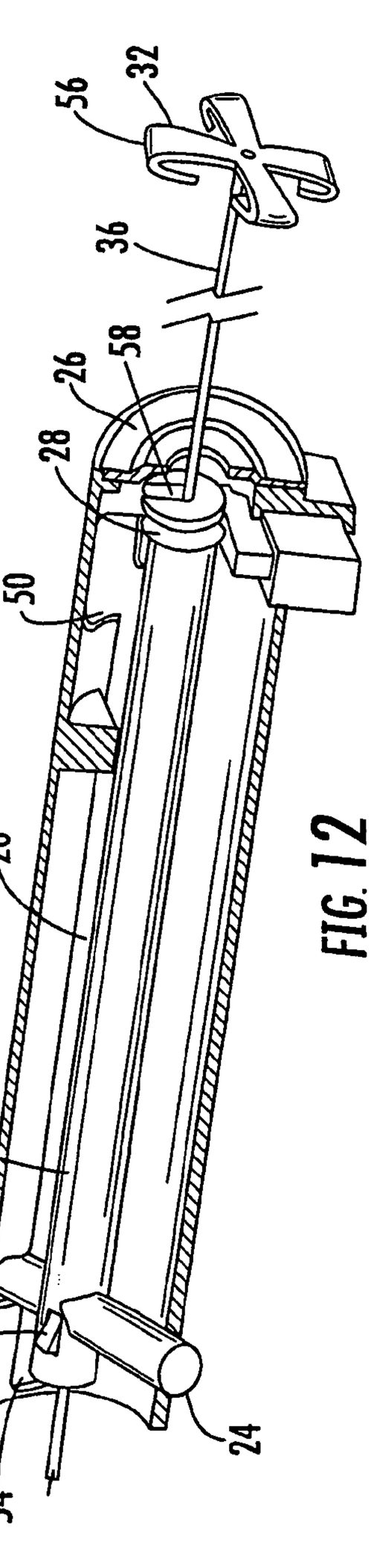

FIG. 12

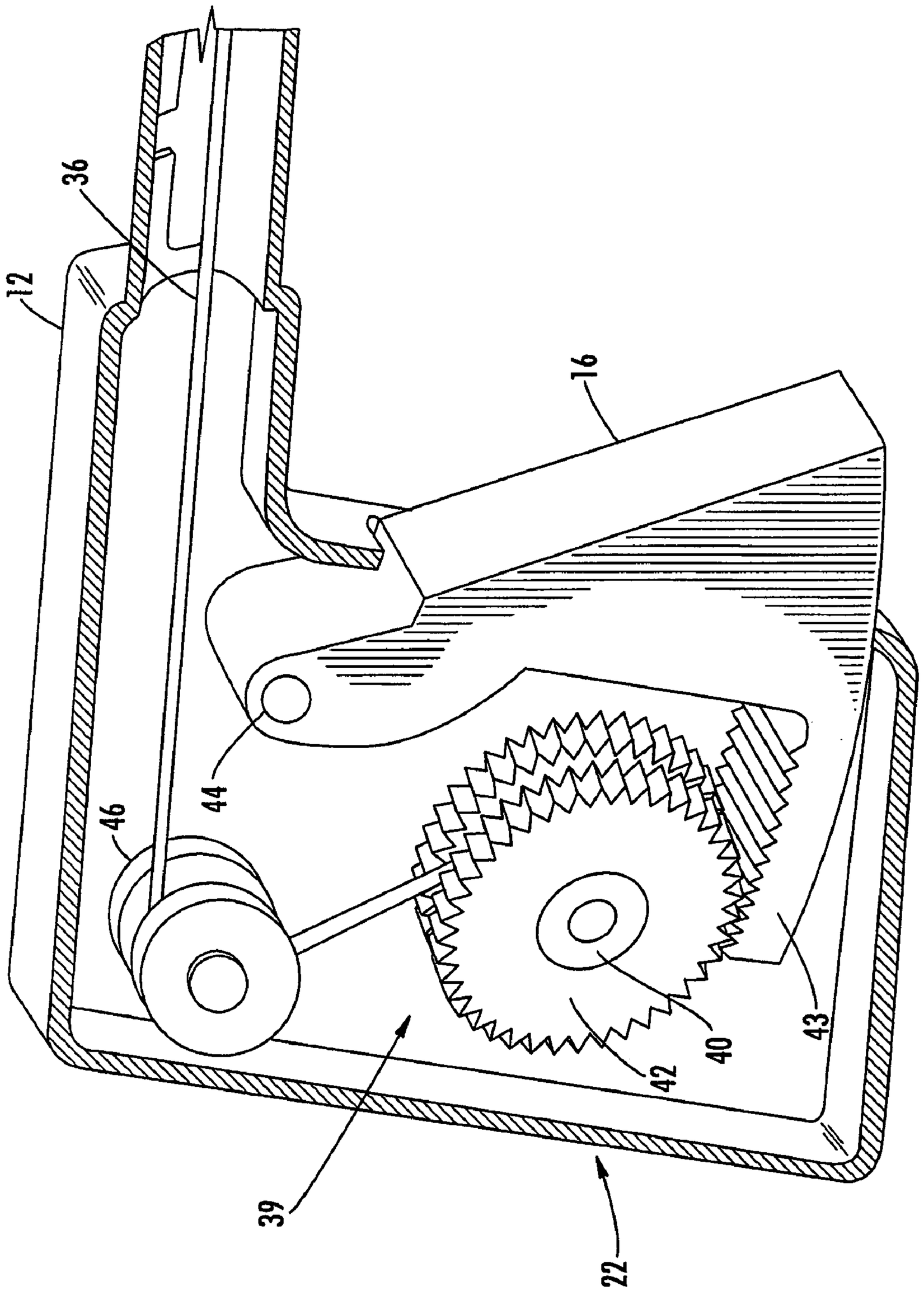

FIG. 13

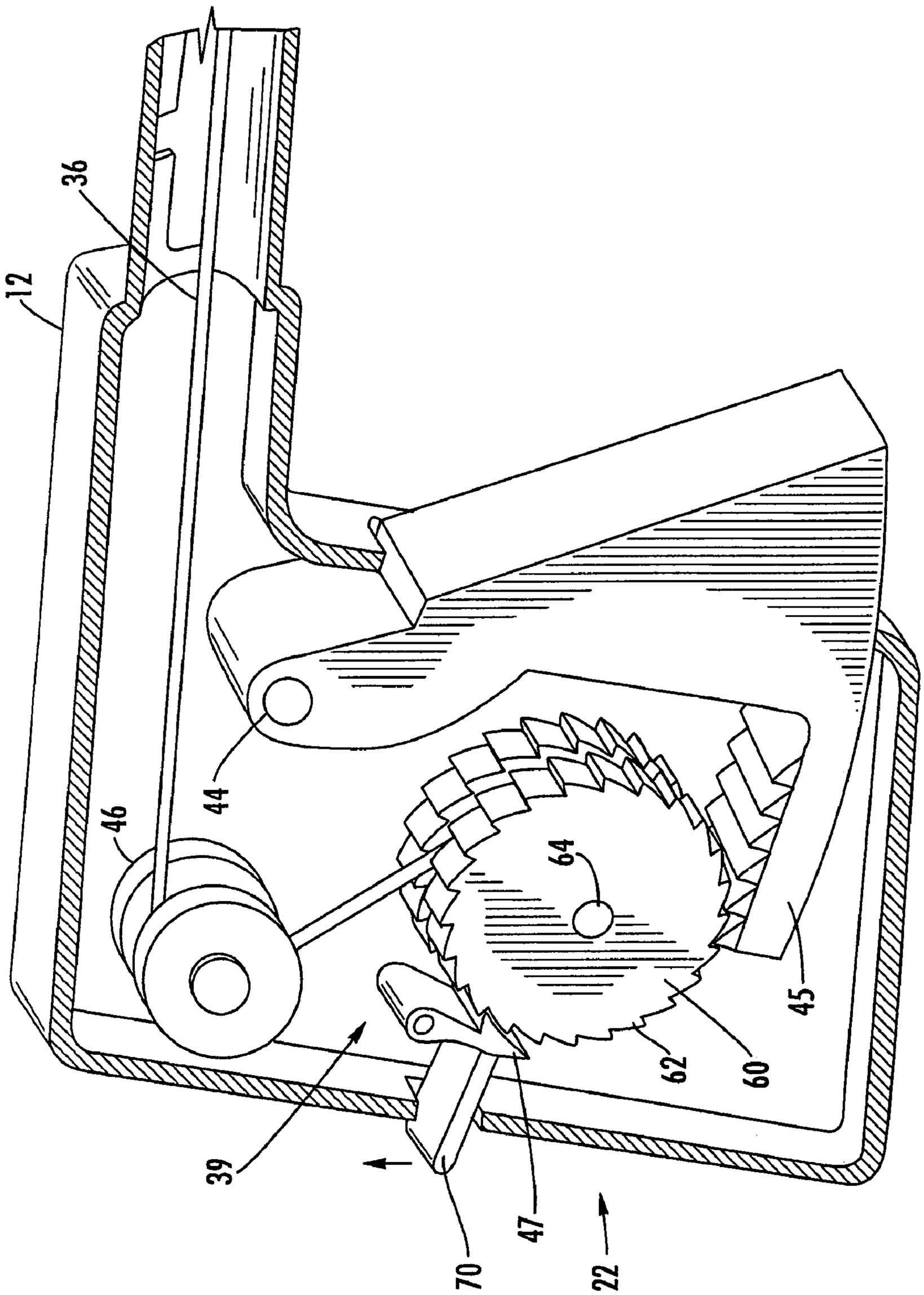

FIG. 14

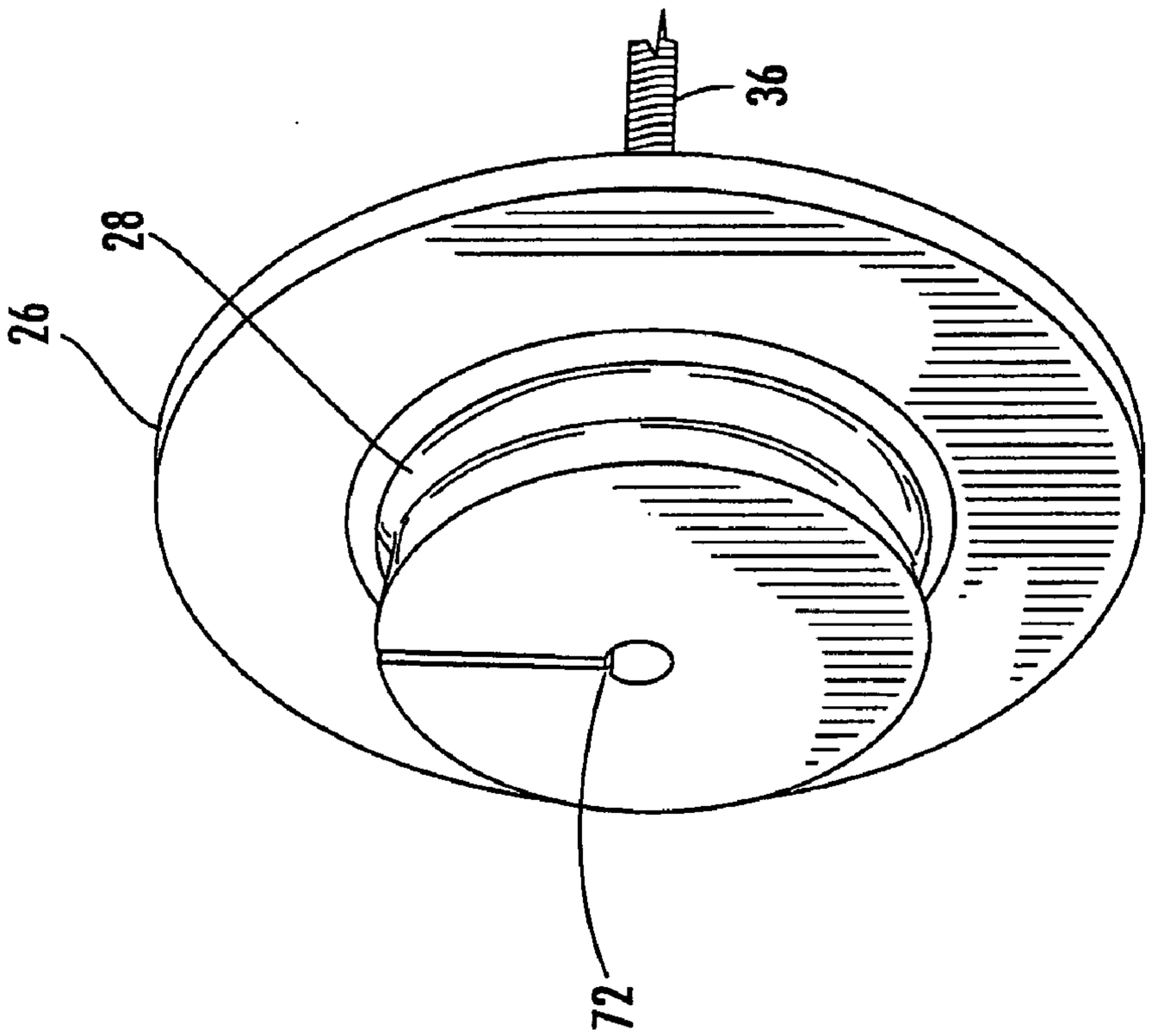

FIG. 16

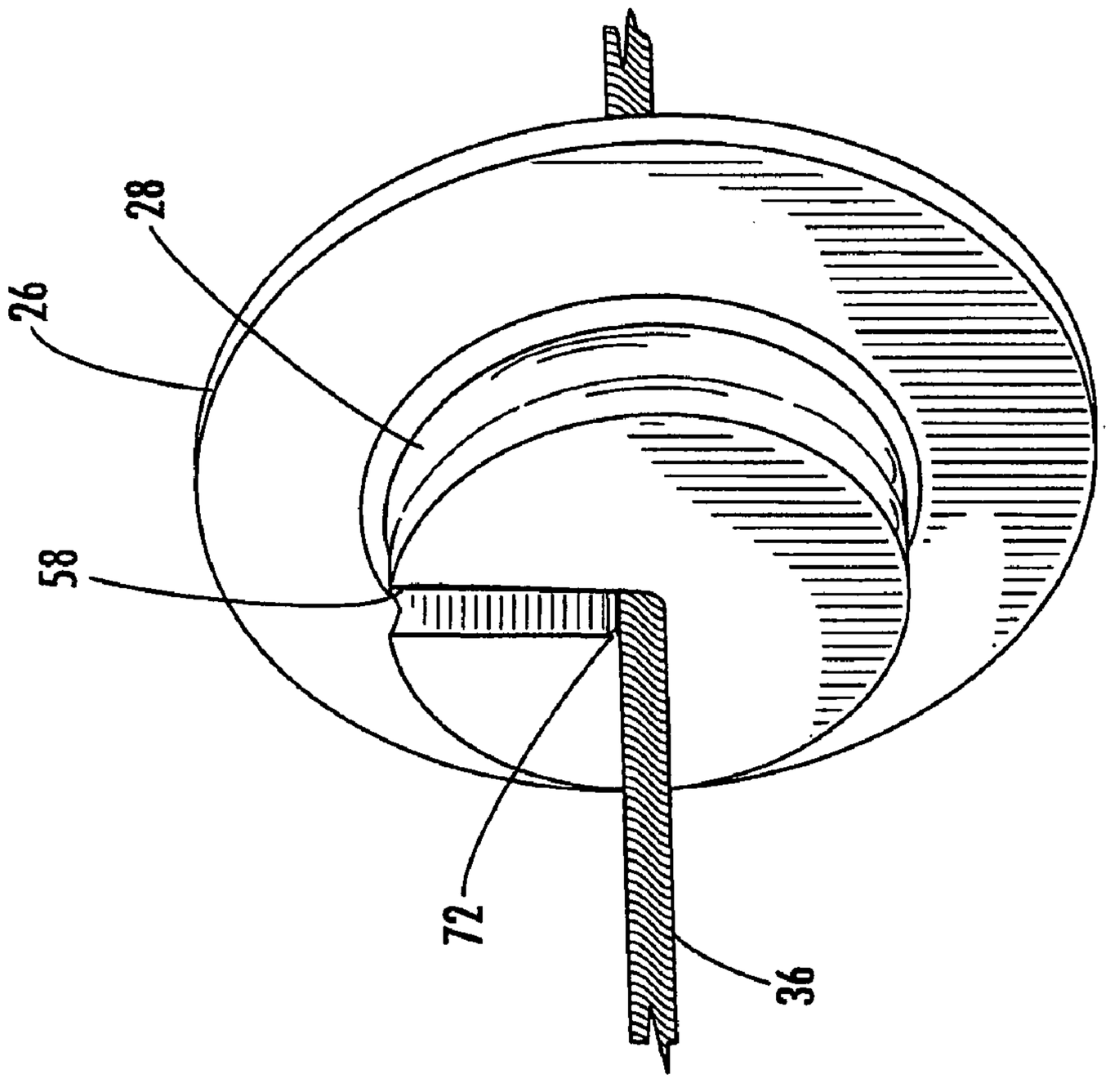

FIG. 15

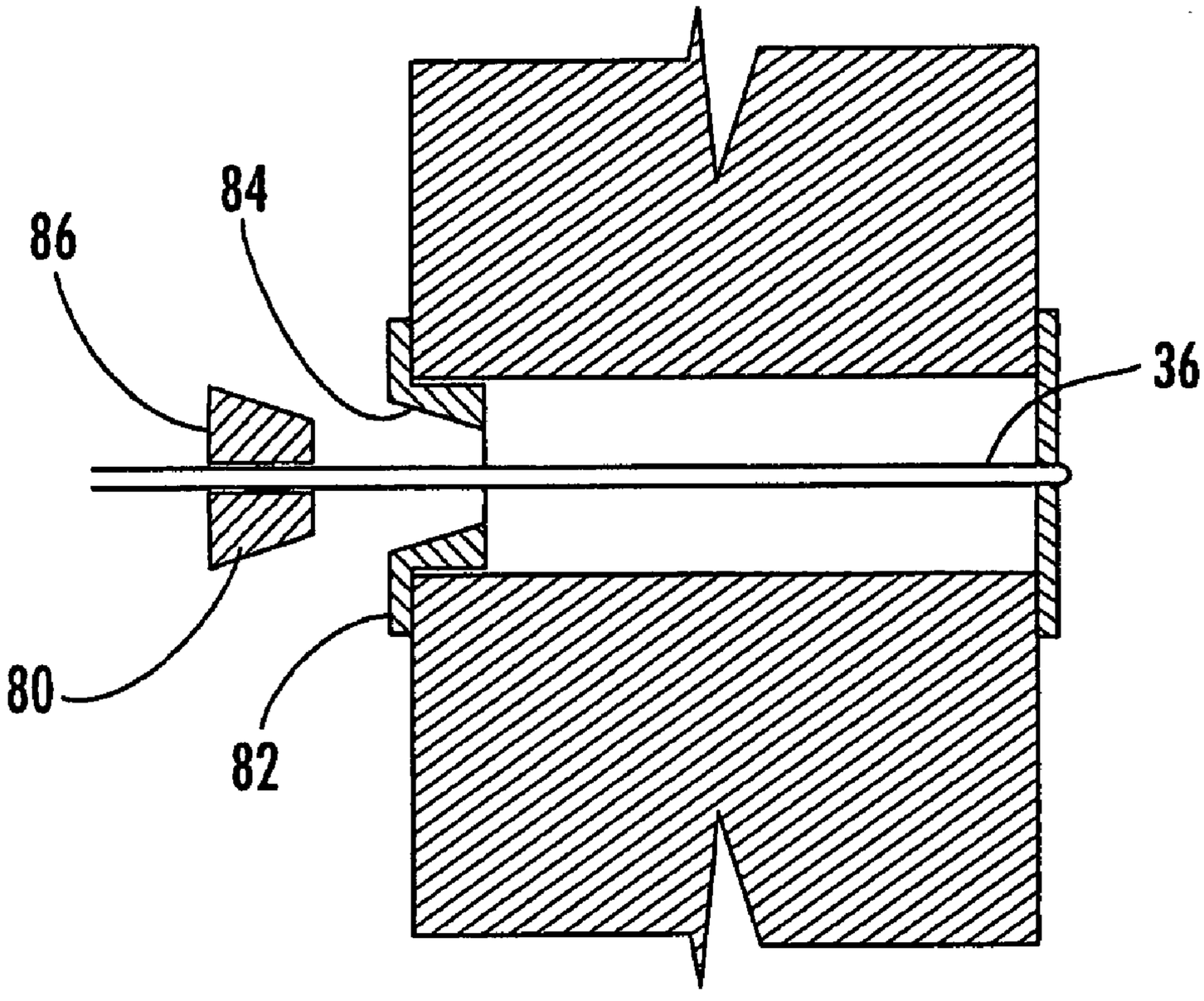

FIG. 17

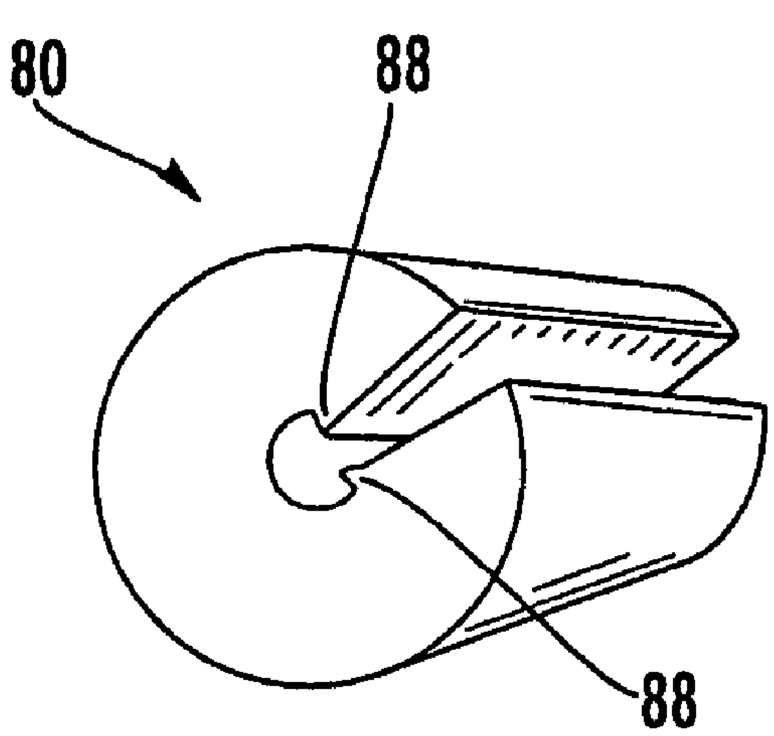

FIG. 18

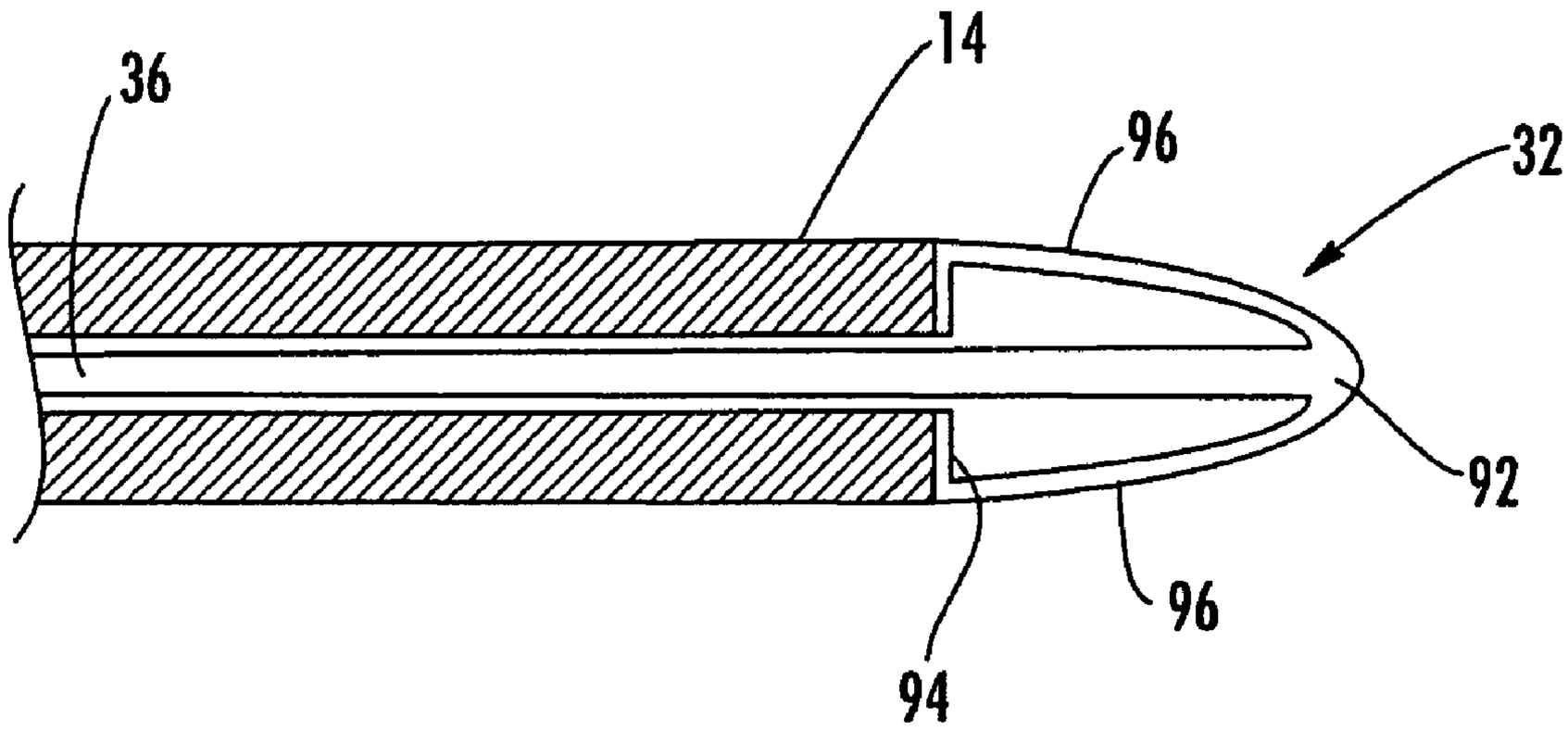

FIG. 19A

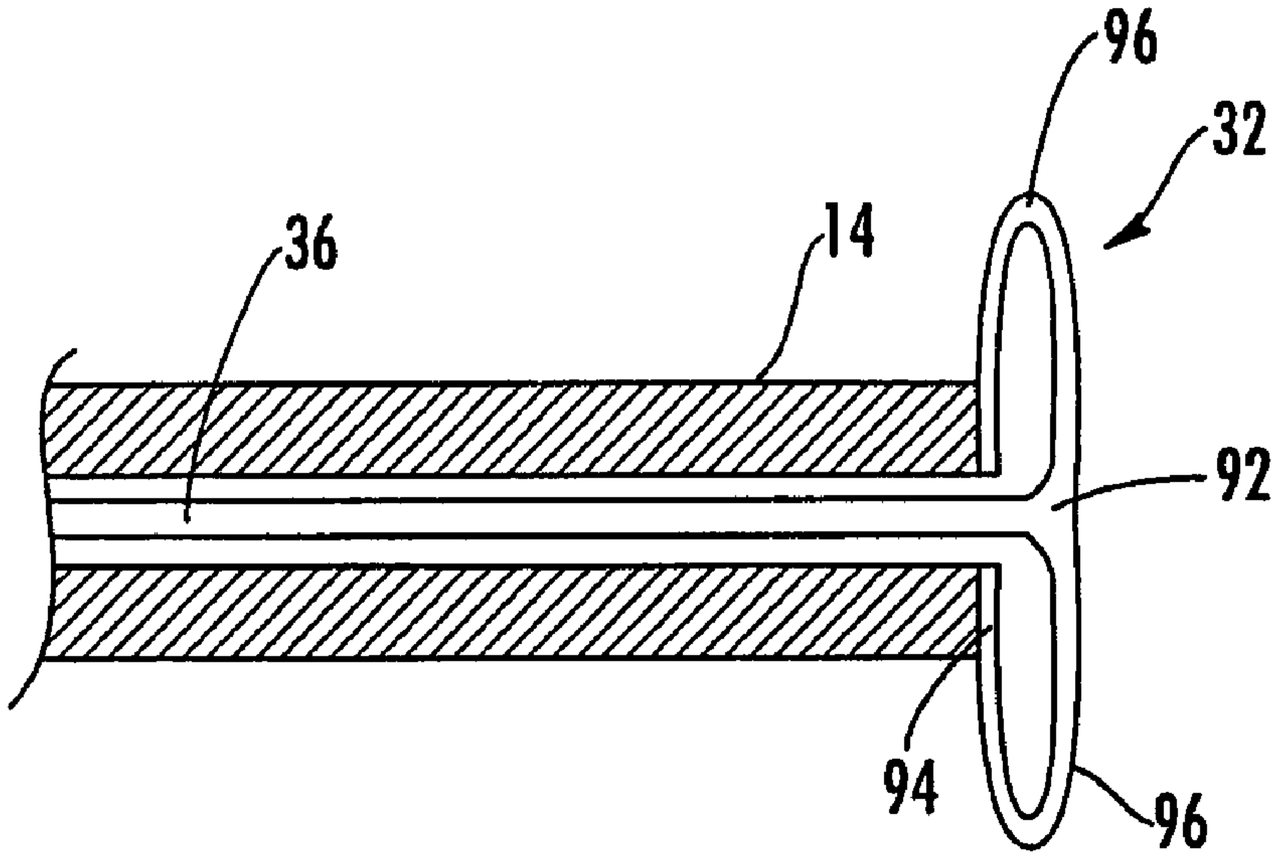

FIG. 19B

SYSTEM AND METHOD OF BONE COMPRESSION AND FIXATION

CROSS-REFERENCE TO RELATED APPLICATIONS

This application claims the benefit of U.S. Provisional Application No. 60/846,100, filed Sep. 21, 2006, which is hereby incorporated by reference.

FIELD OF THE INVENTION

The present invention relates to devices for installing a tension member in a bone and, more specifically, to a tension member application device for providing compression and stabilization of a bone.

BACKGROUND OF THE INVENTION

For years bones have been repaired using medical hardware such as nails, screws, or pins, often in combination with plates or rods. In order to stabilize a fractured bone, for example, the surgeon usually inserts one or more pieces of hardware across the fracture to hold the broken bones together in compression during the healing process. Compression is crucial to bone healing as it stabilizes the bone and stimulates bone growth. These hardware devices are often used in multiples because the compression force of the hardware is limited by how well the chosen hardware affixes to the bone. When more than one hardware device is used, they are often applied to opposing sides of the fracture requiring larger incisions or multiple incisions. The increase in the number of pieces of hardware also leads to increased time in surgery, higher cost of the surgery, greater potential for scarring and stiffness, and increased risk for another surgery to remove painful hardware.

When a person ages, their bones become more brittle as the cortex gets thinner, increasing the likelihood of broken bones. While weakened bones are prevalent in the elderly, such conditions are not limited to the elderly and can be found in people of any age. In weakened bones, the hardware used to repair a bone can cause damage to the bone when initially inserted and can more easily loosen from the bone during routine activity. With more brittle bones, hardware must be inserted more strategically in only the strongest parts of the bone, necessitating a maximum amount of holding force with a minimum amount of hardware. The problem then exists that if holding force is increased, or even remains constant, while using less hardware, the pressure exerted by each piece of hardware is increased in bone that likely cannot sustain the higher forces involved.

Thus, the need exists for a device to stabilize a bone that can be quickly and easily installed with minimal invasiveness. This device must be able to provide adequate holding force to facilitate healing, while reducing the risk of further damage to the bone. Advantageously, the device would also reduce human error by limiting the force that can be applied during installation.

BRIEF SUMMARY OF THE INVENTION

The present invention generally relates to a tension member installation and tensioning device for repairing bone. The device may be used to repair bone fractures, osteotomies, and other bone defects. Advantageously, in one embodiment, the device includes a barrel that houses a tension member, such as a cable, with a leading element attached to the leading end of the tension member. The barrel of the device is inserted into a hole drilled through a bone until the barrel is beyond the distal cortex of the bone. The leading element is then engaged with the distal cortex. The barrel is then retracted from the hole, and tension is applied to the tension member via a tensioning mechanism, such as a trigger, to attach a terminal element to a trailing portion of the tension member when a certain tension is achieved. Thus, the device may be used to install a tension member at a predetermined tension across a bone defect to promote healing without the need for multiple incisions or numerous pieces of hardware.

In one embodiment, the device includes a barrel configured to be inserted in a hole drilled bicortically through the bone and a tension member housed at least partially within the barrel and having a leading end. A leading element is attached to the leading end of the tension member, and the leading element is configured to pass through the hole and to engage a distal cortex of the bone. A terminal element is configured to attach to a trailing portion of the tension member and to engage a proximal cortex of the bone. The device also includes a tensioning mechanism configured to apply tension to the tension member, such that the terminal element attaches to the tension member at a predetermined tension of the tension member. In this way, a length of the tension member extending between the leading element and the terminal element may apply compression to the bone.

In some cases, the barrel includes an outer chamber and an inner chamber, where the outer chamber at least partially surrounds the inner chamber and the outer chamber is configured to slide over and lock onto the inner chamber, thereby releasing the leading element from the barrel. The leading element may include a body and a number of wings attached to the body, with the wings having a first position in which the wings are collapsed to allow the leading element to fit within the outer chamber and a second position in which the wings are expanded to increase a width of the leading element and permit engagement with the distal cortex. In some embodiments, the wings are configured to be generally perpendicular to the tension member when in the second position and are configured to move from the first position to the second position when unrestrained by the outer chamber.

In other cases, the leading element includes a distal end, a proximal end, and at least one flat member connecting the distal and proximal ends. Each flat member may be configured to bend outward and expand a width of the leading element to engage the distal cortex when the distal end is drawn toward the proximal end via the tension member.

In some embodiments, the device includes a casing at least partially housing the barrel and configured to allow the barrel to move longitudinally within the casing. Thus, the terminal element may include a static washer removably attached to an end of the casing and a crimp. The static washer may be configured to receive the crimp, and the crimp may be configured to attach to the tension member and to engage the static washer. The static washer and crimp may be configured with a taper, and the crimp may be configured to collapse around the tension member when axially loaded under tension via the tension member. In some cases, the crimp may define a slot extending from an edge of the crimp towards a center of the crimp, and the slot may be configured to receive the tension member. The crimp may be configured to deform to attach to the tension member, and/or the crimp may include a scoring edge configured to score the tension member.

Furthermore, the tensioning mechanism may include a trigger configured to apply tension to the tension member. The tensioning mechanism may further include at least one gear configured to interact with the trigger and the tension

member and to apply tension to the tension member upon actuation of the trigger. In some cases, the terminal element includes a cutter configured to cut the tension member near the terminal element such that the length of the tension member extending between the leading element and the terminal element is detached from the device.

In other embodiments, a method of installing a tension member for stabilizing a bone is provided. A barrel is initially inserted into a hole drilled in the bone such that an end of the barrel extends beyond a distal cortex of the bone. The barrel at least partially houses the tension member, and a leading element is attached to a leading end of the tension member. The leading element is then engaged with the distal cortex, and the barrel is withdrawn from the hole. Tension is then applied to the tension member to attach a terminal element to a trailing portion of the tension member, where the terminal element is configured to attach to the tension member and engage a proximal cortex of the bone when a predetermined amount of tension on the tension member is achieved.

In some cases, an outer chamber of the barrel is moved over an inner chamber of the barrel such that the outer chamber releases the leading element and locks onto the inner chamber. Tension may be applied to the tension member to draw a distal end of the leading element toward a proximal end of the leading element, thereby expanding the leading element. A crimp may thus be applied to the trailing portion of the tension member when the predetermined amount of tension is achieved, where the crimp is configured to engage a static washer to form the terminal element. The crimp may be deformed when the predetermined amount of tension is achieved to attach the crimp to the tension member.

In some embodiments, a trigger may be actuated to incrementally increase the tension in the tension member. The tension member may also be cut proximate the terminal element, which, in some cases, may be done by deforming at least part of the terminal element to score the tension member and applying force to the tension member to sever the tension member.

BRIEF DESCRIPTION OF THE SEVERAL VIEWS OF THE DRAWING(S)

Having thus described the invention in general terms, reference will now be made to the accompanying drawings, which are not necessarily drawn to scale, and wherein:

FIG. **1** is an isometric view of the tension member application device according to one embodiment;

FIG. **1**A is a section view of the isometric view of the tension member application device of FIG. **1**;

FIG. **2**A is an illustration of the tension member application device inserted through a hole drilled in a fractured bone according to one embodiment;

FIG. **2**B is an illustration of the tensioned tension member spanning the fracture with a leading element and a terminal element affixed to the tension member according to one embodiment;

FIG. **3** is an illustration of an expandable leading element confined within an outer chamber of the tension member application device according to one embodiment;

FIG. **4** is a section view of the outer chamber of FIG. **3** showing an inner chamber and the leading element confined within the outer chamber;

FIG. **5** is a section view of the outer chamber of FIG. **3** after the leading element has been pushed through the outer chamber by the inner chamber;

FIG. **6** is an illustration of the leading element of FIG. **3** when it is fully expanded according to one embodiment;

FIG. **7** is an illustration of the leading element according to one embodiment;

FIG. **8** is an illustration of the leading element with a living hinge according to another embodiment;

FIG. **9** is a section view of a casing of the tension member application device with a static washer attached to the casing according to one embodiment;

FIG. **10** is a section view of the tension member application device as inserted into a hole spanning the fracture according to one embodiment;

FIG. **11** is a section view of the tension member application device after retraction of the barrel into the casing according to one embodiment;

FIG. **12** is a section view of the tension member application device upon locking the barrel in the casing and tensioning the tension member according to one embodiment;

FIG. **13** is a section view of the casing and a grip portion of the tension member application device showing a tensioning mechanism according to one embodiment;

FIG. **14** is a section view of the casing and the grip portion of the tension member application device showing the tensioning mechanism according to another embodiment;

FIG. **15** is an illustration of a terminal element with a cutting edge for severing the tension member;

FIG. **16** is an illustration of the terminal element fastened into position with the tension member severed;

FIG. **17** is an illustration of the crimp and static washer of the terminal element according to another embodiment;

FIG. **18** is an illustration of the crimp of FIG. **17** showing a scoring edge according to one embodiment;

FIG. **19**A is an illustration of a leading element before it is expanded according to one embodiment; and

FIG. **19**B is an illustration of a leading element of FIG. **19**A after it is expanded.

DETAILED DESCRIPTION OF THE DRAWINGS

The present invention now will be described more fully hereinafter with reference to the accompanying drawings, in which some, but not all embodiments of the invention are shown. Indeed, the invention may be embodied in many different forms and should not be construed as limited to the embodiments set forth herein; rather, these embodiments are provided so that this disclosure will satisfy applicable legal requirements. Like numbers refer to like elements throughout.

Embodiments of the present invention generally relate to a tension member installation and tensioning device for repairing bone. For example, the device may be used to repair bone fractures, osteotomies, and other bone defects. For ease of explanation, however, the specification and accompanying figures will refer to bone fractures, although it is to be understood that any type of bone repair, including the repair of fractures, osteotomies, and other bone defects, may be accomplished using embodiments of the device described herein.

As described further below, the tension member application device includes a barrel that houses a tension member with a leading element attached to the leading end of the tension member. In general, the barrel of the tension member application device is inserted into a hole drilled bicortically through a bone until the barrel is beyond the distal side of the hole. The leading element is released from the barrel or otherwise deployed to engage the distal cortex of the bone. The barrel is then retracted from the bone, and a terminal element is attached to a trailing portion of the tension member. A tensioning mechanism is used to apply tension to the tension

member, and at a predetermined tension the terminal element attaches to the tension member and engages the proximal cortex of the bone. In some cases, a crimp surrounds the tension member and engages a static washer to form the terminal element. The crimp may either be pushed onto the tension member, or it may be pre-threaded on the tension member, such as during manufacture of the tension member application device. The device may further include a trigger or any other form of control for applying tension to the tension member (e.g., a button or switch) and a cutter for severing the tension member from the application device after installation.

The tension applied to the tension member (i.e., the predetermined tension) necessarily varies based on several factors of each individual operation. For example, the size, type, and condition of the bone, the configuration and material type of the leading and terminal elements, and numerous other factors contribute to determine the appropriate tension that is applied to the tension member for attaching the terminal element and stabilizing the bone. In some embodiments, typical ranges of tension that may be applied are between about 5 and 50 pounds-force. For example, when stabilizing a young healthy bone during a procedure for repairing a proximal tibia periarticular fracture, the predetermined tension may be around 30 pounds-force. Furthermore, the necessary tension may dictate the material type and size of the tension member.

Referring to FIG. **1**, a tension member application device **10** according to one embodiment is shown in the isometric view. The device **10** of FIG. **1** includes a casing **12**, a barrel **14**, and a trigger **16**. The casing **12** and barrel **14** may, for example, be made of high-grade plastic, metal, or other material suitable to a sterile surgical environment. The barrel **14** is configured (i.e., sized and shaped) to be inserted into a hole **15** drilled through a fractured bone **17** (shown in FIG. **2**A); thus, the particular configuration of the barrel **14** may vary depending on the type and size of the bone to be treated. For example, a barrel **14** to be used for fixing a fracture of an adult femur may have different dimensions than a barrel **14** to be used for fixing a fracture of a child's humerus.

The barrel **14** may be configured to fit within and be movable through at least part of the casing **12**. For example, as depicted in FIG. **1**, the casing **12** may include one or more slots **20** through which one or more barrel handles **24** may extend to facilitate the movement of the barrel **14** through the casing **12**. In this way, the barrel handles **24** may be moved along the slots **20** towards a grip portion **22** of the casing **12** such that the barrel **14** may be retracted into the casing **12**, as described below.

FIG. **1**A shows the inside of the casing **12** of the tension member application device **10** depicted in FIG. **1**, including a tensioning mechanism **39** (described below). A tension member **36** with a leading end **19** is housed at least partially within the barrel **14** and is attached at the leading end **19** to a leading element **32**. The leading element **32** may be made of a material such as stainless steel, titanium, shape memory alloy, polymer or other materials suitable for use within the human body. The tension member **36** may be made of a material such as braided or non-braided stainless steel, titanium, polymer or other material suitable for use within the human body, or a combination of such materials. In some cases, the tension member **36** may be a two-section member including a more rigid portion of the tension member **36** that is inserted into the fractured bone, and a second portion of more flexible material for the section of the tension member **36** that engages the tensioning mechanism **39**. These two materials may be joined such that the transition between the two materials does not affect the function of the tension member application device **10**. For example, the tension member **36** may include a leading portion made of monofilament wire that is welded to a trailing portion made of braided stainless steel.

The tension member **36** may extend from the leading element **32**, through the barrel **14** and the casing **12**, and into the grip portion **22** of the casing **12**, where it may engage the tensioning mechanism **39**. Referring to FIGS. **1**A and **2**B, the leading element **32** (shown released from the barrel **14** in FIG. **1**A) is configured to expand according to one embodiment so as to engage a distal cortex **13** of the bone **17** on a distal side of the fracture **21** (as shown in FIG. **2**B). It should be noted that although FIGS. **2**A and **2**B show the tension member installation on a fracture across the shaft of the bone, the tension member application device **10** may be used to repair fractures of bones having other configurations, such as pelvic fractures, and periarticular fractures, i.e., fractures at the end of the bone near the location of a joint, where installation of plates and screws for fracture fixation could result in painful, prominent hardware or loss of fixation secondary to screws pulling away from the relatively soft bone. Furthermore, as previously mentioned, the tension member application device **10** may be used to repair osteotomies and other bone defects not illustrated.

Referring to FIGS. **3-6**, the barrel **14** may include an outer chamber **30** and an inner chamber **34**. As seen in FIGS. **4** and **5**, the outer chamber **30** may be configured to at least partially surround the inner chamber **34**. Furthermore, the outer chamber **30** may be configured to slide over the inner chamber **34**, such that the inner and outer chambers **34**, **30** may be locked onto each other and may subsequently move in unison as the barrel **14**, as further described below. For example, the inner and outer chambers **34**, **30** may initially be configured as shown in FIGS. **3** and **4**, with the leading element **32** disposed at a leading end of the inner chamber **34** and held in a collapsed position by the walls of the outer chamber **30**. Another embodiment may eliminate the need for a separate inner chamber **34** by providing a leading element **32** that is held in place against a leading edge of the outer chamber **30** or barrel **14** via the tension member **36**, as described below.

Once the barrel **14** of the tension member application device **10** is inserted into the hole **15** drilled through the fractured bone **17** (i.e., spanning the fracture) such that the end of the barrel **14** extends beyond the distal cortex **13** of the bone **17** (as shown in FIG. **2**A), the leading element **32** may be released from the barrel **14** and allowed to expand. To release the leading element **32**, the outer chamber **30** is pulled back with respect to the inner chamber **34** (the relative movement of the chambers **34**, **30** being indicated by the arrows in FIG. **4**), which locks the chambers **30**, **34** together, thereby forcing the leading element **32** out of the outer chamber **30**, as shown in FIG. **5**, and permitting the leading element **32** to expand and engage the distal cortex.

In this regard, the leading element **32** may include a body **37** and a number of wings **41** attached to the body, as illustrated in FIG. **7**. The wings **41** may be configured to have a first position, in which the wings **41** are collapsed to allow the leading element **32** to fit at least partially within the outer chamber **30** (e.g., as shown in FIGS. **3** and **4**) for passage through the hole, and a second position, in which the wings **41** are expanded to increase a width of the leading element **32** (e.g., as shown in FIGS. **5** and **6**) and allow engagement of the distal cortex. For example, the wings **41** may be configured to be generally perpendicular to the tension member **36** (e.g., via a spring or other biasing mechanism) when in the second position such that, when unrestrained by the outer chamber **30**, the wings **41** move from the first position to the second position. In another embodiment, shown in FIG. **8**, the lead-

ing element **32** includes wings **41** that each comprise a living hinge **56**. The living hinge **56** is configured such that in the expanded position, each wing **41** folds onto itself providing reinforcement to the leading element **32** (as shown in FIG. **6**). When the tension member **36** is tensioned, as described below, the leading element **32** may be fully expanded, as shown in FIG. **6**, to create a larger surface for engagement with the distal cortex **13** of the fractured bone **17** (as shown in FIG. **2**B).

Another embodiment of the leading element **32**, shown in FIGS. **19**A and **19**B, may include a leading element **32** that is held outside the barrel **14** and has an initial diameter generally equal to the diameter of the barrel **14**, but that includes one or more flat members **96** that are configured to expand when tension is applied to the tension member **36**, thereby eliminating the need for separate inner and outer chambers. In this case, the tension member **36** is attached to the distal end **92** of the leading element **32** and the proximal end **94** of the leading element **32** is held in place against the barrel **14** via the tension member **36** (FIG. **19**A). Once the leading element **32** is inserted beyond the distal cortex, tension may be increased in the tension member **36** such that the distal end **92** of the leading element **32** may be pulled towards the proximal end **94** of the leading element **32**. As a result, the flat members **96** of the leading element **32** may bend outward and permanently deform to create a surface with an expanded diameter greater than that of the hole drilled through the bone, thereby allowing the leading element **32** to engage the distal cortex (FIG. **19**B). In some cases, each flat member **96** may include a stress riser to facilitate bending of the flat member **96** in the area of the stress riser when tension is applied.

Referring to FIG. **9**, in embodiments including an inner chamber **34** and an outer chamber **30** of the barrel **14**, the outer chamber **30** may include an opening **48** configured to receive a tab **38** of the inner chamber **34**. The tab **38** may be configured to allow the outer chamber **30** to slide over the tab **38** when being moved relative to the inner chamber **34** in the direction shown in FIG. **4**. For example, the inner chamber **34** may include stops **49** configured to engage a portion of the casing **12** such that the inner chamber **34** may be held stationary as the outer chamber **30** is moved into locking engagement with the inner chamber **34**. Once the tab **38** of the inner chamber **34** is received by the opening **48** of the outer chamber **30**, the inner chamber **34** and outer chamber **30** together form the barrel **14** and may be moved in unison to complete installation of the tension member **36** in the fractured bone.

The tension member application device **10** further includes a terminal element **29** configured to attach to a trailing portion of the tension member **36** and to engage a proximal cortex **23** of the bone **17**, as shown in FIG. **2**B. Referring again to FIG. **9**, the terminal element may include a static washer **26** and a crimp **28**. The static washer **28** and crimp **26** may, for example, be composed of stainless steel, titanium, or other materials compatible with the human body, though they need not be composed of the same material. The static washer **26** may be removably attached to an end of the casing **12**, such as via a press fit or interference fit, and the crimp **28** may be configured to attach to the tension member **36** and to engage the static washer **26**. For example, the crimp **28** may be disposed in a crimp ejection mechanism **18** and may be positioned away from the barrel **14**, such that the barrel **14** is permitted to move within the casing **12** without being hindered by the crimp **28**. Alternatively, the crimp may be free from the device and added by the surgeon at some point during the procedure. The static washer **26** may be configured such that the barrel **14** is able to pass through a void **25** formed in a central portion of the static washer **26** without detaching the static washer **26** from the casing **12**.

Turning to FIGS. **10-12**, once the barrel **14** is installed in a hole spanning the fracture, the barrel **14**, which is initially positioned such that the barrel handles **24** are in one or more first locking slots **50** extending from longitudinal slots **20**, may be placed in a first locked position by moving the barrel handles **24** along the first locking slots **50** (towards the grip portion **22** shown in FIG. **1**) in order to lock the inner and outer chambers **34**, **30** and release the leading element **32** to engage the distal cortex, as previously described (FIG. **10**). The barrel **14** may then be rotated from the first locking slots **50** into the longitudinal slots **20** and retracted into the casing **12**, towards the grip portion **22** (shown in FIG. **1**) as previously described, until the barrel handles **24** are at the ends **54** of the longitudinal slots **20** and the barrel **14** is clear of the crimp **28** (FIG. **11**).

The crimp ejection mechanism **18** may be configured to move towards the barrel **14** and casing **12**, such that, once the barrel **14** has been retracted into the casing **12** past the location of the crimp **28**, for example, to the ends **54** of the longitudinal slots **20**, the crimp ejection mechanism **18** may be moved towards the now exposed tension member **36**, as shown in FIG. **11**. The crimp ejection mechanism **18** may in some cases be manually movable, such that a surgeon may push on an external portion of the mechanism **18** to move it towards the tension member **36**. In other cases, the crimp ejection mechanism **18** may be spring-loaded or otherwise biased such that the mechanism **18** automatically moves towards the tension member **36** once the barrel **14** is clear.

The crimp **28** may define a slot **58** extending from the edge of the crimp **28** towards the center of the crimp **28** (as shown in FIG. **12**). In some cases, the slot may also extend past the center of the crimp. The slot **58** may thus be configured to receive the tension member **36**, such that, once the crimp ejection mechanism **18** is moved towards the tension member **36**, the tension member **36** may fit within the slot **58**. The crimp **28** may be made of a material that deforms as a predetermined amount of force is applied to the crimp **28**. In this way, the crimp **28** may be configured to deform to hold the tension member **36**, for example, causing the slot **58** to surround and attach to the tension member **36** (as shown in FIGS. **15-16** and described below).

In some embodiments, the crimp **28** may be configured to automatically attach to the tension member **36** at a predetermined tension of the tension member **36**. Thus, tension may be applied to the tension member **36**, for example, via the tensioning mechanism **39** shown in FIGS. **1**A, **13**, and **14**, and the crimp **28** may automatically attach to the tension member **36** once the tension in the tension member **36** reaches a certain level. Referring to FIG. **12**, the barrel **14** may be moved into one or more second locking slots **52** extending transversely from the longitudinal slots **20** via rotation of the barrel handles **24** such that the leading end of the barrel **14** engages the crimp **28**, which presses against the static washer **26**, releasing it from the casing **12** and causing it to protrude beyond the end of the casing **12**. As tension is applied to the tension member **36**, the proximal cortex **23** of the bone **17** (shown in FIG. **2**B) will press against the static washer **26**, which will transmit the force to the engaged crimp **28**. On the other side of the crimp **28**, the end of the barrel **14** will apply an opposite force to the crimp **28**, thereby "sandwiching" the crimp **28** between the barrel **14** on one side and the static washer **26** on the other. As the force approaches the value at which the crimp **28** is configured to deform (due to increasing tension applied to the tension member **36**), the crimp **28** will attach to the tension member **36** as a result of deformation of

the crimp **28** (e.g., the slot **58**) around the tension member **36**. In this embodiment, the crimp **28** and the static washer **26** may be configured to fit together, as shown in FIG. **15**, so as to combine to form the terminal element **29** (shown in FIG. **2**B), which will hold the tension in the tension member **36** once the tensioning operation is complete.

Referring to FIG. **17**, another embodiment of a crimp **80** may include a static washer **82** with an internal taper **84**. The crimp **80** may be configured such that when the barrel **14** of the tension member application device **10** applies force to the proximal side **86** of the crimp **80** via tensioning the tension member **36**, the crimp **80** is forced into the taper **84** of the static washer **82**, causing the crimp **80** to deform and attach to the tension member **36**. The crimp **80** may further include one or more scoring edges **88** (shown in FIG. **18**) configured to score or otherwise pierce the tension member **36** such that it is totally severed or can be easily severed from the tension member application device **10**. For example, upon achieving the predetermined amount of tension in the tension member **36**, the tension member **36** may be sufficiently scored such that the surgeon may manually sever the tension member **36** by twisting the tension member application device or otherwise applying force to the scored area.

Referring to FIG. **13**, the grip portion **22** of the tension member application device **10** is shown in a sectional isometric view that displays the tensioning mechanism **39** within the casing **12** according to one embodiment. In this embodiment, the tensioning mechanism **39** includes a hub **40**, a gear **42**, and a guide hub **46** to align the tension member **36** with the barrel **14**. The tension member **36** is secured around the hub **40**, which is mounted on a one-way-clutch (not shown) within the gear **42**. The other end (i.e., the leading end) of the tension member **36** is attached to the leading element, as previously described. The trigger **16** is configured to apply tension to the tension member **36**. For example, in the illustrated embodiment, actuation of the trigger **16** turns the gear **42** via engaging teeth **43**, which in turn rotates the hub **40** and winds the tension member **36** around the hub **40**. When the trigger **16** is released, the trigger **16** springs back to the extended position for subsequent actuation, for example, via a coiled spring or other biasing mechanism (not shown) within a hinge pin **44**. The gear **42**, which is still engaged with the teeth **43** of the trigger **16**, rotates backwards as the trigger **16** returns to the extended position, but the hub **40** remains stationary due to the internal one-way clutch. This operation may thus be repeated as necessary by additional actuations of the trigger **16**, creating further tension in the tension member **36** until the predetermined amount of tension is achieved in the tension member **36** and enough pressure is applied between the barrel **14** and the leading element **32** to deform the crimp **28** that secures the tension member **36** (as shown in FIG. **12** and described above) or until the surgeon determines that enough tension has been applied to the tension member **36**.

Referring to FIG. **14**, another embodiment of the tensioning mechanism **39** is shown. In this embodiment, the tensioning mechanism **39** includes a gear **60** with teeth **62** that are designed for one-way engagement. In this way, when the trigger **16** is depressed, the gear **60** turns via engaging teeth **45** on the trigger **16** and winds the tension member **36** around a hub **64**. When the trigger **16** is released, the biased hinge pin **44** returns the trigger **16** to the extended position, but the gear teeth **62** are no longer engaged with the teeth **45** of the trigger **16** due to the tapered configuration of the teeth **62**, **45**, for example, similar to a ratcheting mechanism. A gear pawl **47** may also be included to engage the gear teeth **62** when the trigger **16** is returning to the extended position (i.e., is not engaged with the gear teeth **62**). The gear pawl **47** may include, for example, one tooth configured to allow the gear **60** to rotate when the gear teeth **62** are engaged with the teeth **45** of the trigger **16** and also configured to engage any one of the gear teeth **62** when the gear **60** is attempting to rotate in the opposite direction. In this way, the gear **60** is held stationary during the extension of the trigger **16** for subsequent actuation, and the tension created in the tension member **36** from previous trigger actuations may be maintained. These are two embodiments of how the tensioning mechanism **39** may be configured, but tensioning mechanisms other than those illustrated here may be employed.

Once the desired amount of tension in the tension member **36** is achieved and the terminal element **29** is attached, the length of the tension member **36** extending between the leading element **32** and the terminal element **29** may be detached from the tension member application device **10**, as shown in FIG. **2**B. Referring to FIG. **15**, the slot **58** of the crimp **28** may include a sharp edge **72** which, upon deformation of the crimp **28**, severs the tension member **36** (as shown in FIG. **16**), thereby detaching the tension member application device **10** from the tensioned tension member **36**. In other embodiments, such as the embodiment shown in FIGS. **17** and **18**, the terminal element may include a crimp **80** having a scoring edge **88** configured to sever or at least score the tension member such that it may be severed, as previously described.

Another embodiment for detaching the tension member application device **10** from the tensioned tension member **36** may include a tension member release mechanism **70**, as shown in FIG. **14**. When the tension member **36** has reached the predetermined tension level that deforms the crimp **28** and attaches the crimp **28** to the tension member **36**, the tension member release mechanism **70** may be pressed to disengage the pawl **47** from the gear teeth **62**, thereby allowing free rotation of the gear **60**. The tension member application device may then be drawn away from the terminal element **29** as the tension member **36** is unwound from the gear hub **64**, such that the user may cut the tension member **36** proximate the terminal element **29** using any appropriate device.

In other embodiments, a method of using a tension member application device to install a tension member for stabilizing a bone is provided. Referring to FIGS. **1** and **2**A, in one embodiment, the surgeon initially inserts the barrel **14** of the device **10** into a hole **15** drilled across a bone fracture **21** until the distal end of the barrel **14** is beyond the distal cortex **13** of the bone **17**. The surgeon then pulls the barrel **14** along the first locking slots **50**, towards the grip portion **22**, via the barrel handles **24** to release the leading element **32** on the distal side of the bone and to lock the inner and outer chambers **30**, **34** together (shown in FIGS. **3-6**). The surgeon then rotates the barrel **14** by rotating the barrel handles **24** until they are inline with the longitudinal slots **20**. The surgeon continues to retract the barrel **14** from the bone by pulling the barrel handles **24** towards the grip portion **22** until the handles **24** reach the ends of the longitudinal slots **54**.

In other embodiments, as described above in conjunction with FIGS. **19**A and **19**B, the surgeon may apply tension to the tension member after inserting the barrel **14** and leading element **32** beyond the distal cortex. As tension is applied, the leading element **32** may engage the distal cortex by drawing the distal end of the leading element **32** towards the proximal end and bending the flat members **96** outwards, as shown in FIG. **19**B. Once the width of the leading element **32** is thus expanded to engage the distal cortex, the surgeon may retract the barrel from the hole and proceed to attach the terminal element to the tension member **36** by applying tension to the tension member **36** until the predetermined amount of tension is achieved.

At this point, in some embodiments, the crimp eject mechanism **18** may be pressed or otherwise actuated to position the crimp **28** over the tension member **36** (shown in FIGS. **10-12**). The barrel **14** may then be moved towards the crimp **28** and rotated by rotating the barrel handles **24** into the transverse locking slots **52**, thereby pushing the crimp **28** into engagement with the static washer **26** to detach the static washer **26** from the casing **12** and form the terminal element **29** (shown in FIG. **2**B after installation of the tension member **36**). The surgeon may then actuate the trigger **16** to apply tension to the tension member **36** until the proper tension is achieved. As tension is applied to the tension member **36**, the crimp **28** deforms to hold the tensioned tension member **36** in place.

In some cases, when the predetermined amount of tension on the tension member **36** is achieved, the crimp may sever the tension member **36**. Alternatively, the crimp may score the tension member **36**, and the surgeon may sever the tension member **36** by twisting or otherwise applying force to the tension member **36**. In other cases, a tension member release mechanism **70** (shown in FIG. **14**) may be actuated to release the tension on the tension member **36** between the terminal element **29** and the tension member application device **10** and provide slack in the tension member **36**. As a result, the surgeon may then cut the tension member **36** proximate the terminal element **29** using any appropriate cutting tool. In some embodiments, the tension member application device is configured for a single use, such that the surgeon may dispose of the tension member application device after severing the installed tension member from the application device. In this way, there is no need to sterilize the device for subsequent tension member installations, and the risk of contamination in other patients may be reduced.

Many modifications and other embodiments of the inventions set forth herein will come to mind to one skilled in the art to which these inventions pertain having the benefit of the teachings presented in the foregoing descriptions and the associated drawings. Therefore, it is to be understood that the inventions are not to be limited to the specific embodiments disclosed and that modifications and other embodiments are intended to be included within the scope of the appended claims. Although specific terms are employed herein, they are used in a generic and descriptive sense only and not for purposes of limitation.

That which is claimed:

1. A device for stabilizing a bone comprising:

a barrel configured to be inserted in a hole drilled bicortically through the bone;

a tension member housed at least partially within the barrel and having a leading end;

a leading element attached to the leading end of the tension member, wherein the leading element is configured to pass through the hole and to engage a distal cortex of the bone;

a terminal element configured to attach to a trailing portion of the tension member while the tension member is at least partially disposed within the barrel and configured to engage a proximal cortex of the bone; and

a tensioning mechanism configured to apply tension to the tension member, such that the terminal element attaches to the tension member at a predetermined tension of the tension member,

wherein a length of the tension member extending between the leading element and the terminal element is configured to apply compression to the bone.

2. The device of claim **1**, wherein the barrel comprises an outer chamber and an inner chamber, wherein the outer chamber at least partially surrounds the inner chamber and the outer chamber is configured to slide over and lock onto the inner chamber, thereby releasing the leading element from the barrel.

3. The device of claim **2**, wherein the leading element comprises a body and a plurality of wings attached to the body, wherein the wings have a first position in which the wings are collapsed to allow the leading element to fit within the outer chamber and a second position in which the wings are expanded to increase a width of the leading element and permit engagement with the distal cortex.

4. The device of claim **3**, wherein the wings are configured to be generally perpendicular to the tension member when in the second position, and wherein the wings are configured to move from the first position to the second position when unrestrained by the outer chamber.

5. The device of claim **1**, wherein the leading element comprises a distal end, a proximal end, and at least one flat member connecting the distal and proximal ends, wherein each flat member is configured to bend outward and expand a width of the leading element to engage the distal cortex when the distal end is drawn toward the proximal end via the tension member.

6. The device of claim **1** further comprising a casing at least partially housing the barrel and configured to allow the barrel to move longitudinally within the casing.

7. The device of claim **6**, wherein the terminal element comprises a static washer removably attached to an end of the casing and a crimp, wherein the static washer is configured to receive the crimp and wherein the crimp is configured to attach to the tension member and to engage the static washer.

8. The device of claim **7**, wherein the static washer and crimp are configured with a taper and wherein the crimp is configured to collapse around the tension member when axially loaded under tension via the tension member.

9. The device of claim **7**, wherein the crimp defines a slot extending from an edge of the crimp towards a center of the crimp, and wherein the slot is configured to receive the tension member.

10. The device of claim **7**, wherein the crimp is configured to deform to attach to the tension member.

11. The device of claim **7**, wherein the crimp comprises a scoring edge configured to score the tension member.

12. The device of claim **1**, wherein the tensioning mechanism includes a trigger configured to apply tension to the tension member.

13. The device of claim **12**, wherein the tensioning mechanism further comprises at least one gear configured to interact with the trigger and the tension member and to apply tension to the tension member upon actuation of the trigger.

14. The device of claim **1**, wherein the terminal element comprises a cutter configured to cut the tension member proximate the terminal element such that the length of the tension member extending between the leading element and the terminal element is detached from the device.

15. A method of installing a tension member for stabilizing a bone comprising:

inserting a barrel into a hole drilled in the bone such that an end of the barrel extends beyond a distal cortex of the bone, wherein the barrel at least partially houses the tension member and a leading element is attached to a leading end of the tension member;

engaging the leading element with the distal cortex;

withdrawing the barrel from the hole; and

applying tension to the tension member to attach a terminal element to a trailing portion of the tension member, wherein the terminal element is configured to attach to

the tension member while the tension member is at least partially disposed within the barrel and engage a proximal cortex of the bone when a predetermined amount of tension on the tension member is achieved.

16. The method of claim **15**, wherein engaging the leading element with the distal cortex comprises moving an outer chamber of the barrel over an inner chamber of the barrel such that the outer chamber releases the leading element and locks onto the inner chamber.

17. The method of claim **15**, wherein engaging the leading element with the distal cortex comprises applying tension to the tension member to draw a distal end of the leading element toward a proximal end of the leading element, thereby expanding the leading element.

18. The method of claim **15**, wherein applying tension comprises attaching a crimp to the trailing portion of the tension member when the predetermined amount of tension is achieved, wherein the crimp is configured to engage a static washer to form the terminal element.

19. The method of claim **18**, wherein applying tension comprises deforming the crimp when the predetermined amount of tension is achieved to attach the crimp to the tension member.

20. The method of claim **15**, wherein applying tension comprises actuating a trigger to incrementally increase the tension in the tension member.

21. The method of claim **15** further comprising cutting the tension member proximate the terminal element.

22. The method of claim **21**, wherein cutting the tension member comprises deforming at least part of the terminal element to score the tension member and applying force to the tension member to sever the tension member.

23. The method of claim **15**, wherein applying tension comprises cutting the tension member proximate the terminal element.

* * * * *