US007869594B2

(12) **United States Patent**
**Tsurumoto**

(10) **Patent No.: US 7,869,594 B2**
(45) **Date of Patent: Jan. 11, 2011**

(54) **DIGITAL BROADCASTING RECEIVING SYSTEM AND DIGITAL BROADCASTING RECEIVING DEVICE**

(75) Inventor: **Takashi Tsurumoto**, Saitama (JP)

(73) Assignee: **Sony Corporation**, Tokyo (JP)

( * ) Notice: Subject to any disclaimer, the term of this patent is extended or adjusted under 35 U.S.C. 154(b) by 1087 days.

(21) Appl. No.: **11/555,067**

(22) Filed: **Oct. 31, 2006**

(65) **Prior Publication Data**

US 2007/0116276 A1 May 24, 2007

(30) **Foreign Application Priority Data**

Nov. 9, 2005 (JP) ..... 2005-325361

(51) **Int. Cl.**
***H04N 7/167*** (2006.01)

(52) **U.S. Cl.** ..... **380/200**; 380/201; 713/189

(58) **Field of Classification Search** ..... None
See application file for complete search history.

(56) **References Cited**

U.S. PATENT DOCUMENTS

| | | | | |
|---|---|---|---|---|
| 6,028,937 | A * | 2/2000 | Tatebayashi et al. | 713/169 |
| 6,141,681 | A * | 10/2000 | Kyle | 709/206 |
| 6,266,416 | B1 * | 7/2001 | Sigbjornsen et al. | 380/255 |
| 6,286,103 | B1 * | 9/2001 | Maillard et al. | 726/26 |
| 7,051,211 | B1 * | 5/2006 | Matyas et al. | 713/187 |
| 7,089,425 | B2 * | 8/2006 | Chan | 713/189 |
| 2005/0078822 | A1 * | 4/2005 | Shavit et al. | 380/201 |

FOREIGN PATENT DOCUMENTS

| | | | |
|---|---|---|---|
| JP | 2005-018725 | A1 | 1/2005 |
| JP | 2005-057459 | | 3/2005 |
| JP | 2005-100378 | | 4/2005 |
| JP | 2005-222418 | | 8/2005 |
| WO | 2005/020043 | | 3/2005 |
| WO | 2005/098570 | A1 | 10/2005 |

* cited by examiner

*Primary Examiner*—Kambiz Zand
*Assistant Examiner*—Peter Poltorak
(74) *Attorney, Agent, or Firm*—K&L Gates LLP

(57) **ABSTRACT**

A digital broadcasting receiving system is provided. The digital broadcasting receiving system includes an information processing device for executing a loader, a main process, and a supervisory process, a digital broadcasting receiving device detachably connected to the information processing device. The information processing device includes storage section on which the loader is developed, and transmits the main process and the supervisory process to the digital broadcasting receiving device. The digital broadcasting receiving device includes receiving section for receiving the broadcast signal to generate content data, decryption key storage section, process decryption section for decrypting the main process and the supervisory process using the decryption key, protective data adding section for adding protective data to the main process decrypted by the process decryption section, and first protective data storage section. The information processing device, in accordance with the loader, receives the decrypted main process and the decrypted supervisory process from the digital broadcasting receiving device.

**10 Claims, 7 Drawing Sheets**

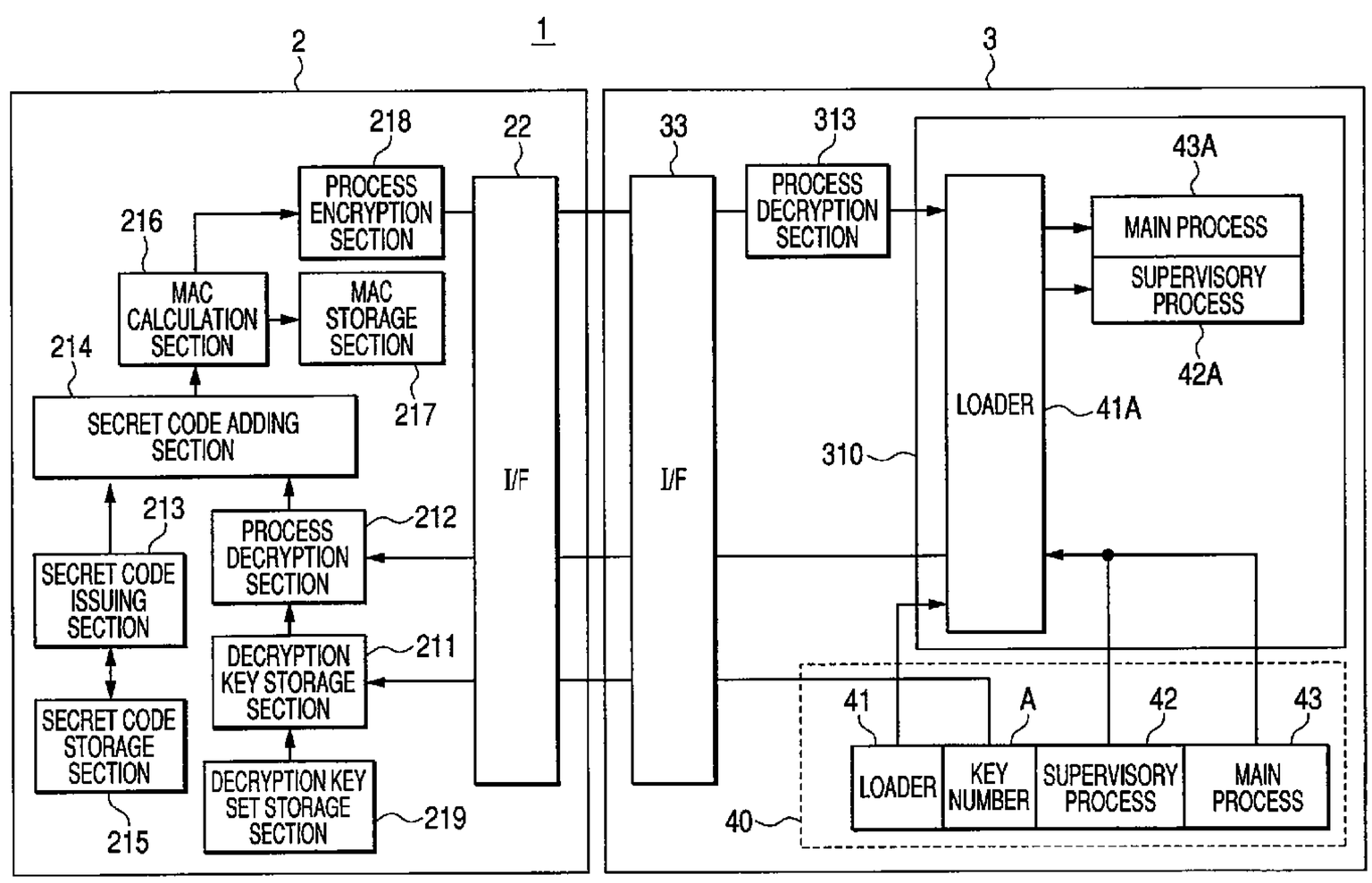

FIG. 1

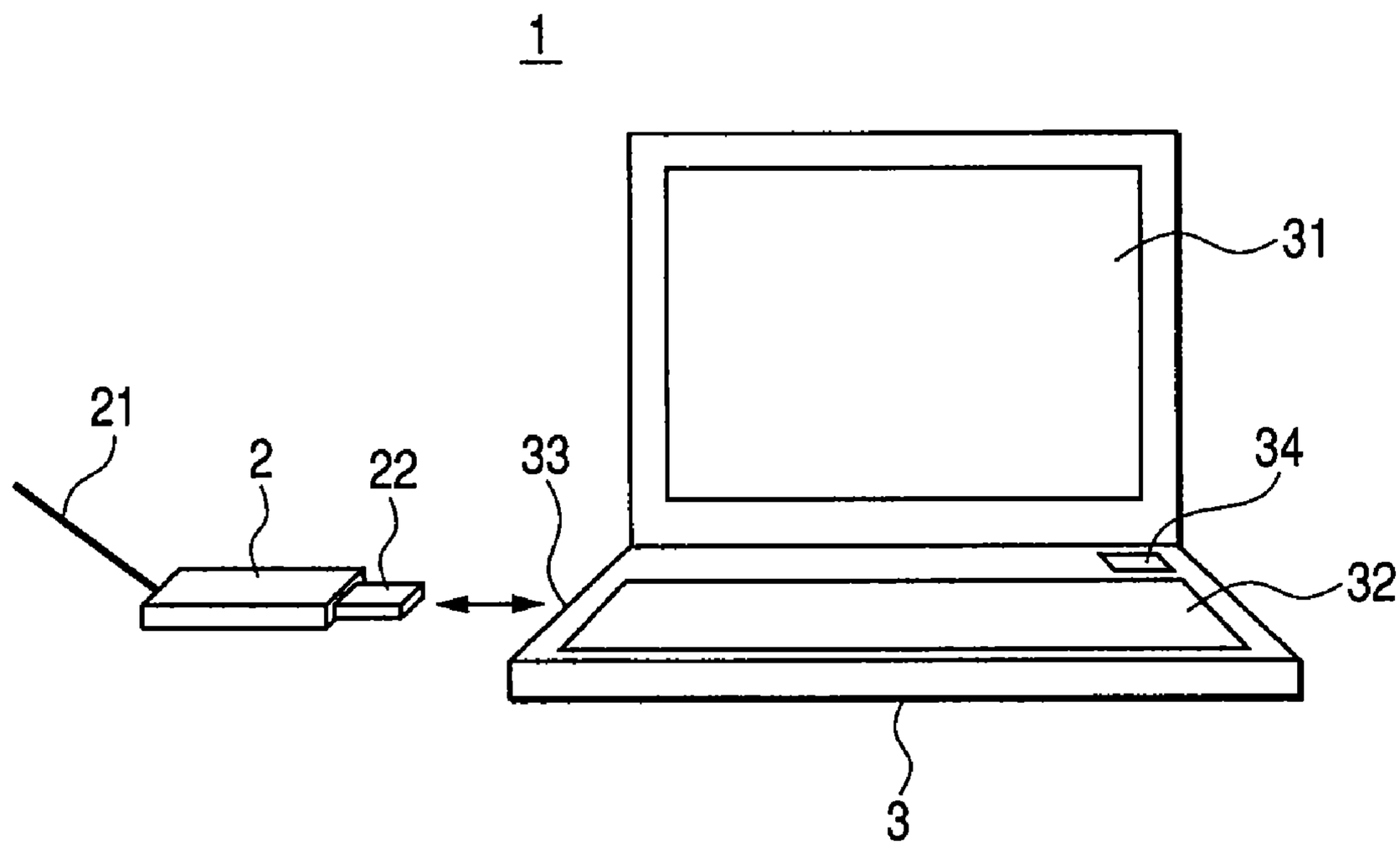
1
31
21
2
22
33
34
32
3

FIG. 2

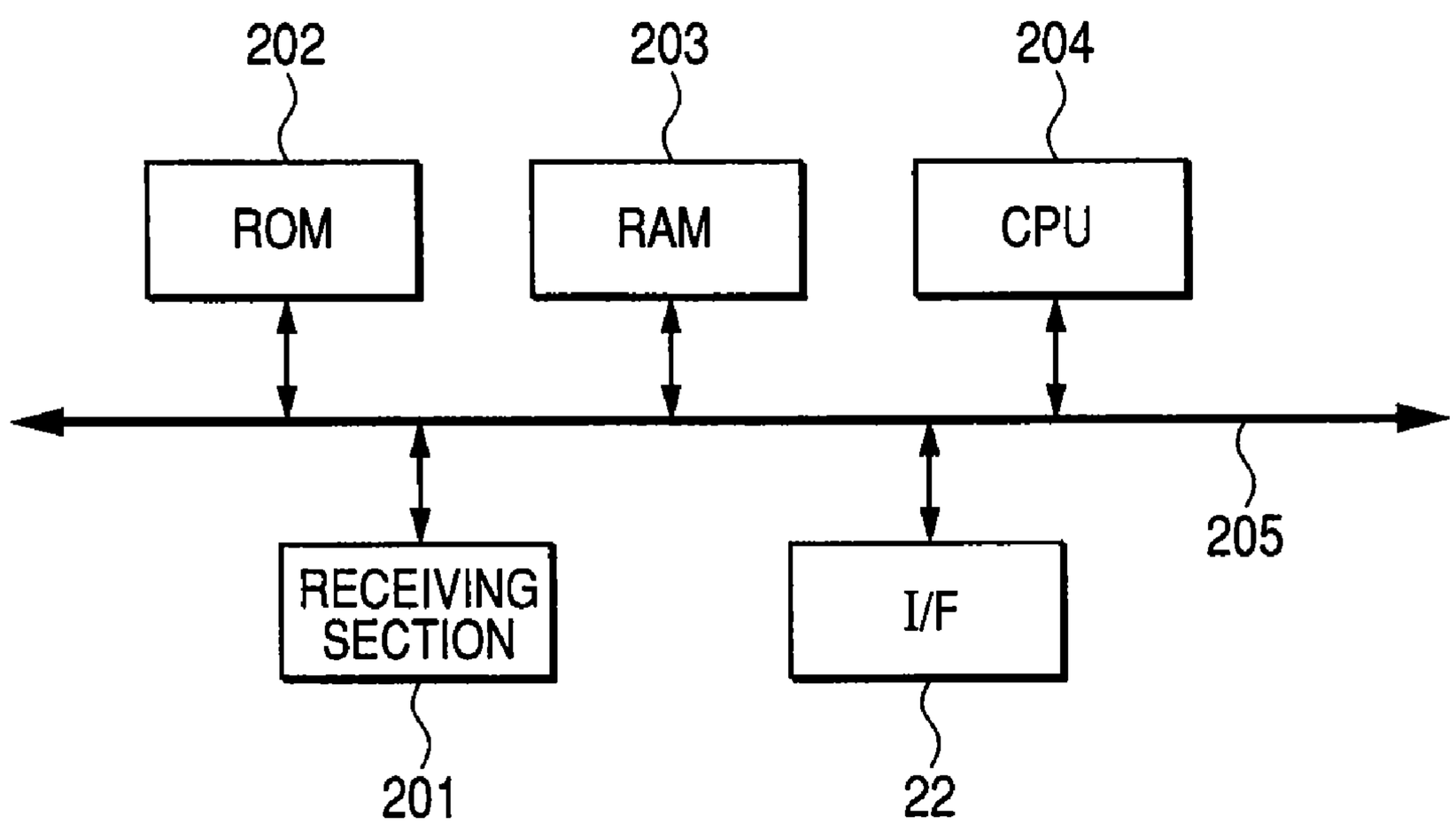
202
203
204
ROM
RAM
CPU
205
RECEIVING SECTION
I/F
201
22

FIG. 3

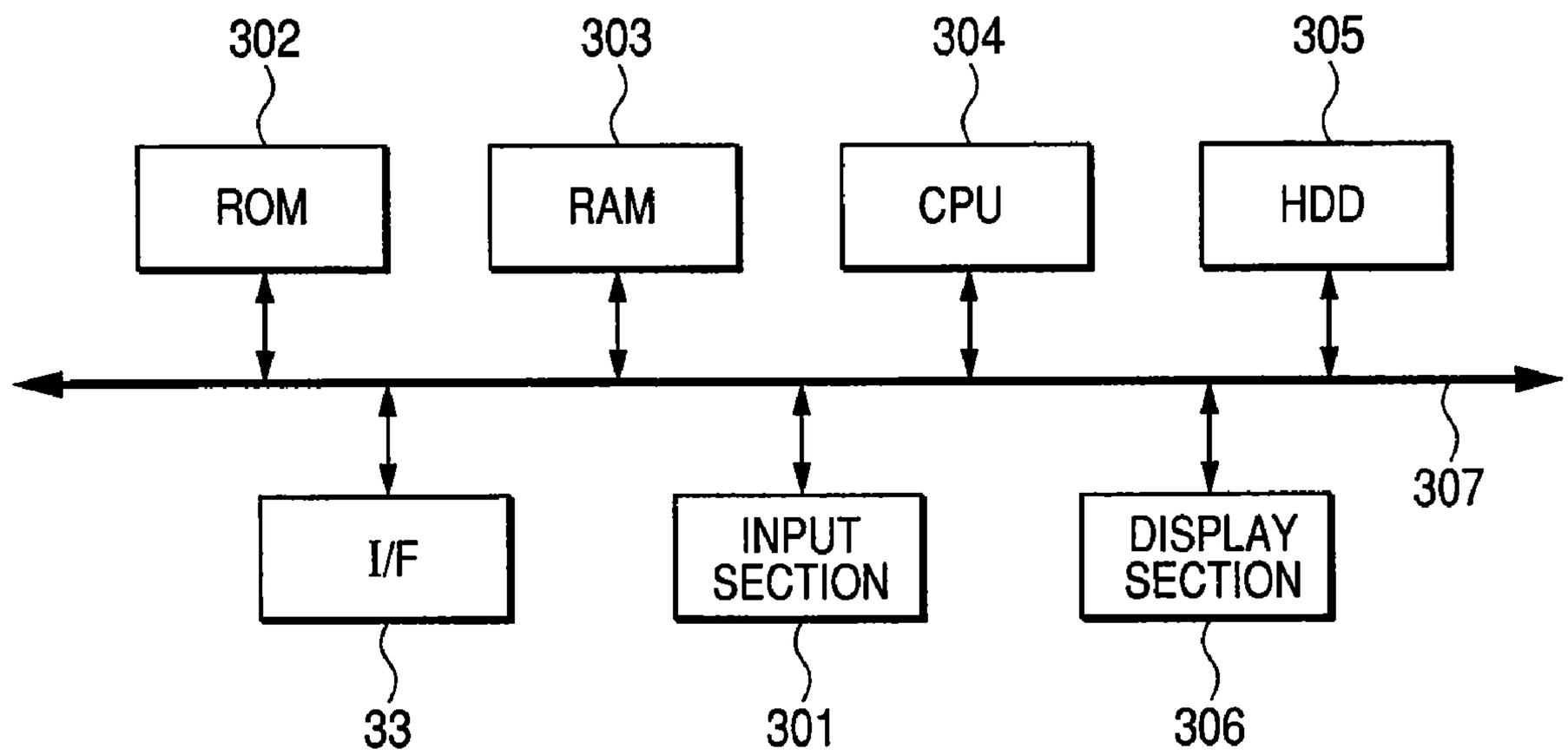
302
303
304
305
ROM
RAM
CPU
HDD
307
I/F
INPUT SECTION
DISPLAY SECTION
33
301
306

FIG. 4

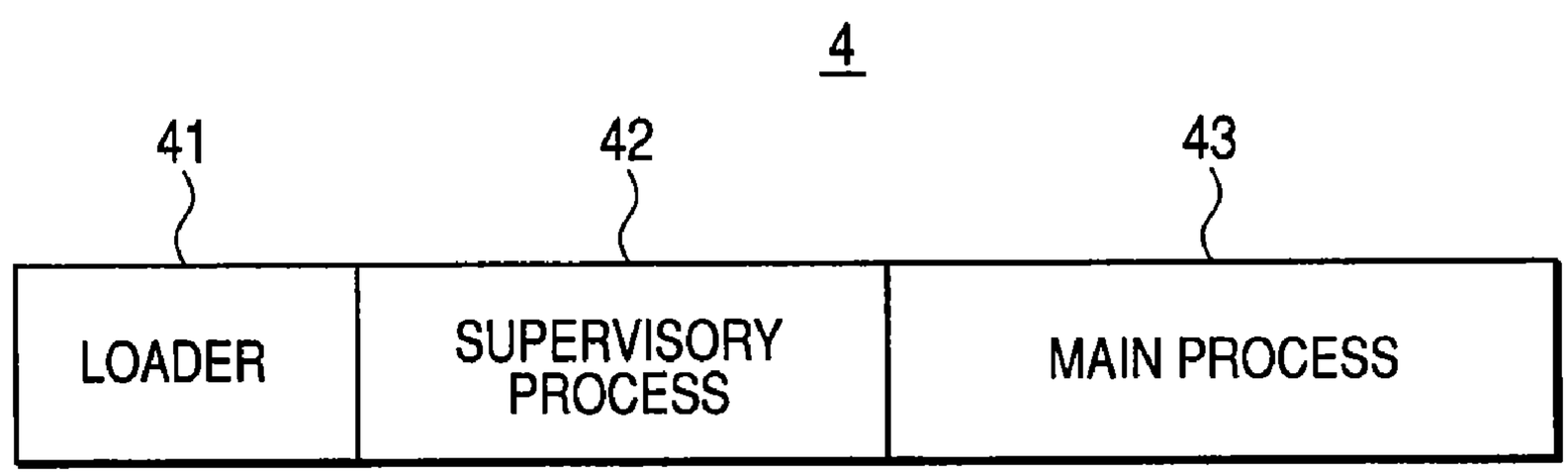
4
41
42
43
LOADER
SUPERVISORY PROCESS
MAIN PROCESS

FIG. 5

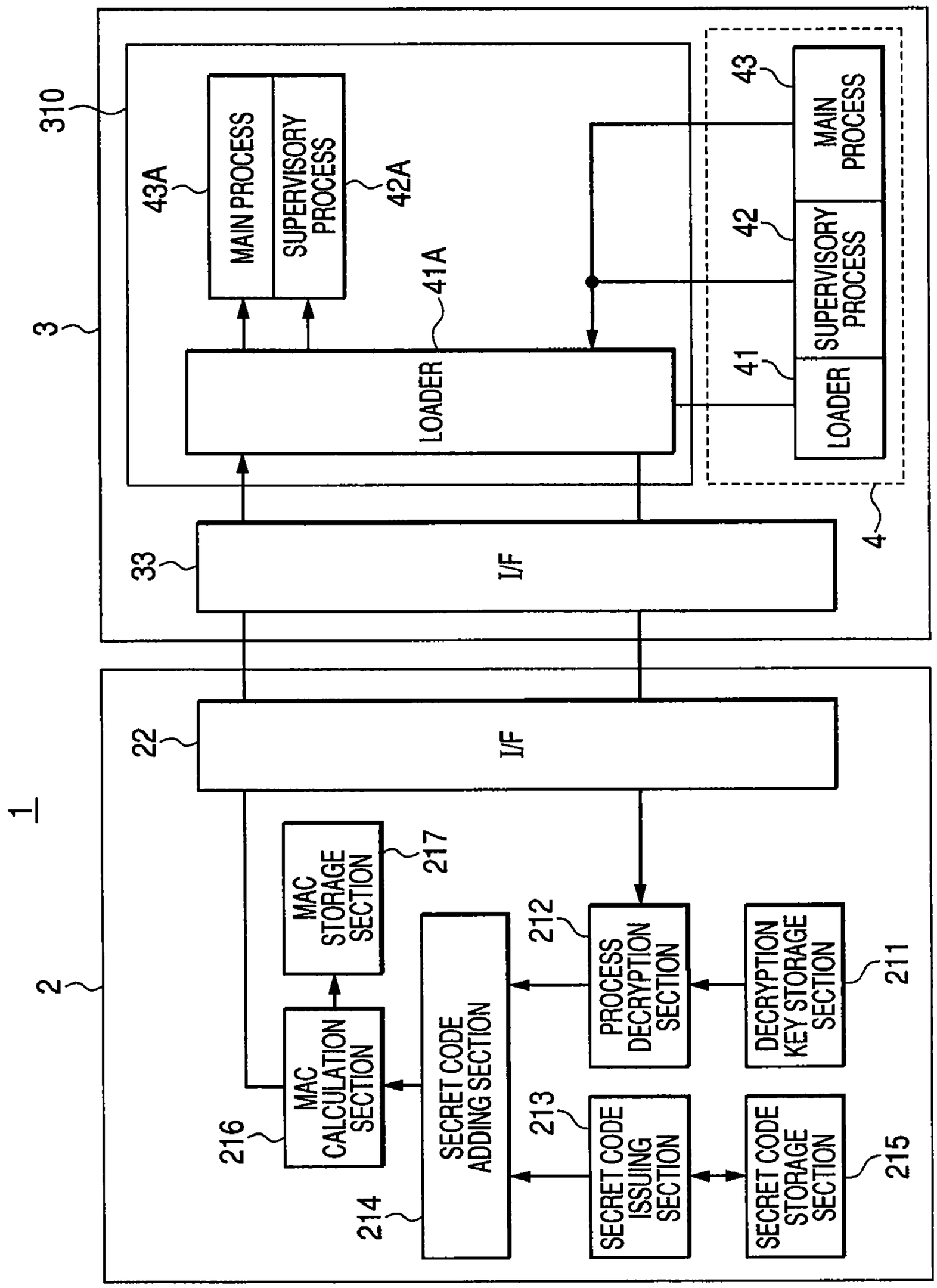
1
2
3
310
43A
MAIN PROCESS
SUPERVISORY PROCESS
42A
41A
LOADER
33
I/F
22
I/F
43
MAIN PROCESS
42
SUPERVISORY PROCESS
41
LOADER
4
MAC STORAGE SECTION
217
MAC CALCULATION SECTION
216
SECRET CODE ADDING SECTION
214
PROCESS DECRYPTION SECTION
212
DECRYPTION KEY STORAGE SECTION
211
SECRET CODE ISSUING SECTION
213
SECRET CODE STORAGE SECTION
215

FIG. 6

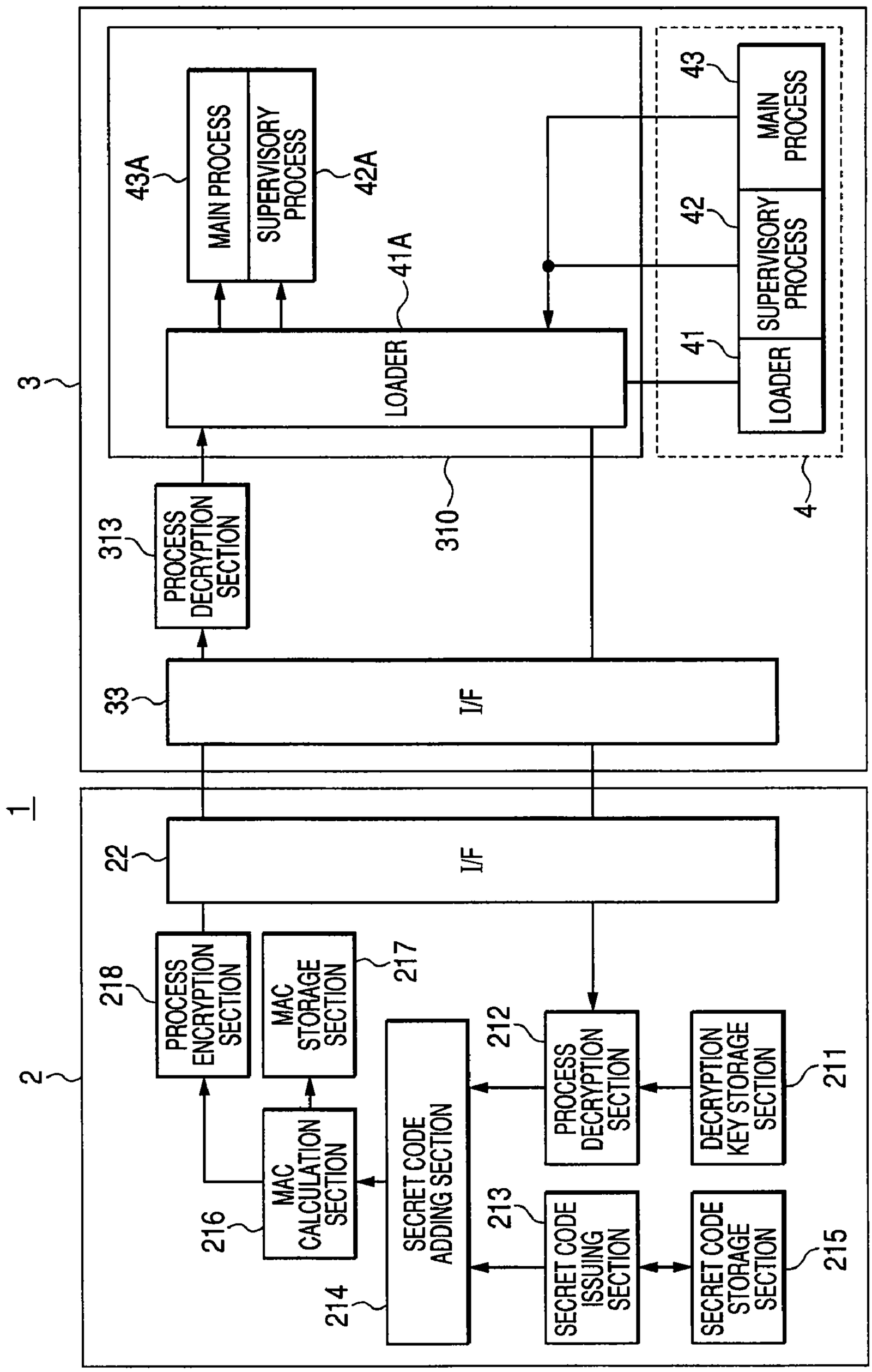
1
2
3
4
43A
MAIN PROCESS
SUPERVISORY PROCESS
42A
41A
LOADER
310
313
PROCESS DECRYPTION SECTION
33
I/F
22
I/F
218
PROCESS ENCRYPTION SECTION
MAC STORAGE SECTION
217
216
MAC CALCULATION SECTION
214
SECRET CODE ADDING SECTION
212
PROCESS DECRYPTION SECTION
DECRYPTION KEY STORAGE SECTION
211
213
SECRET CODE ISSUING SECTION
SECRET CODE STORAGE SECTION
215
43
MAIN PROCESS
42
SUPERVISORY PROCESS
41
LOADER

FIG. 7

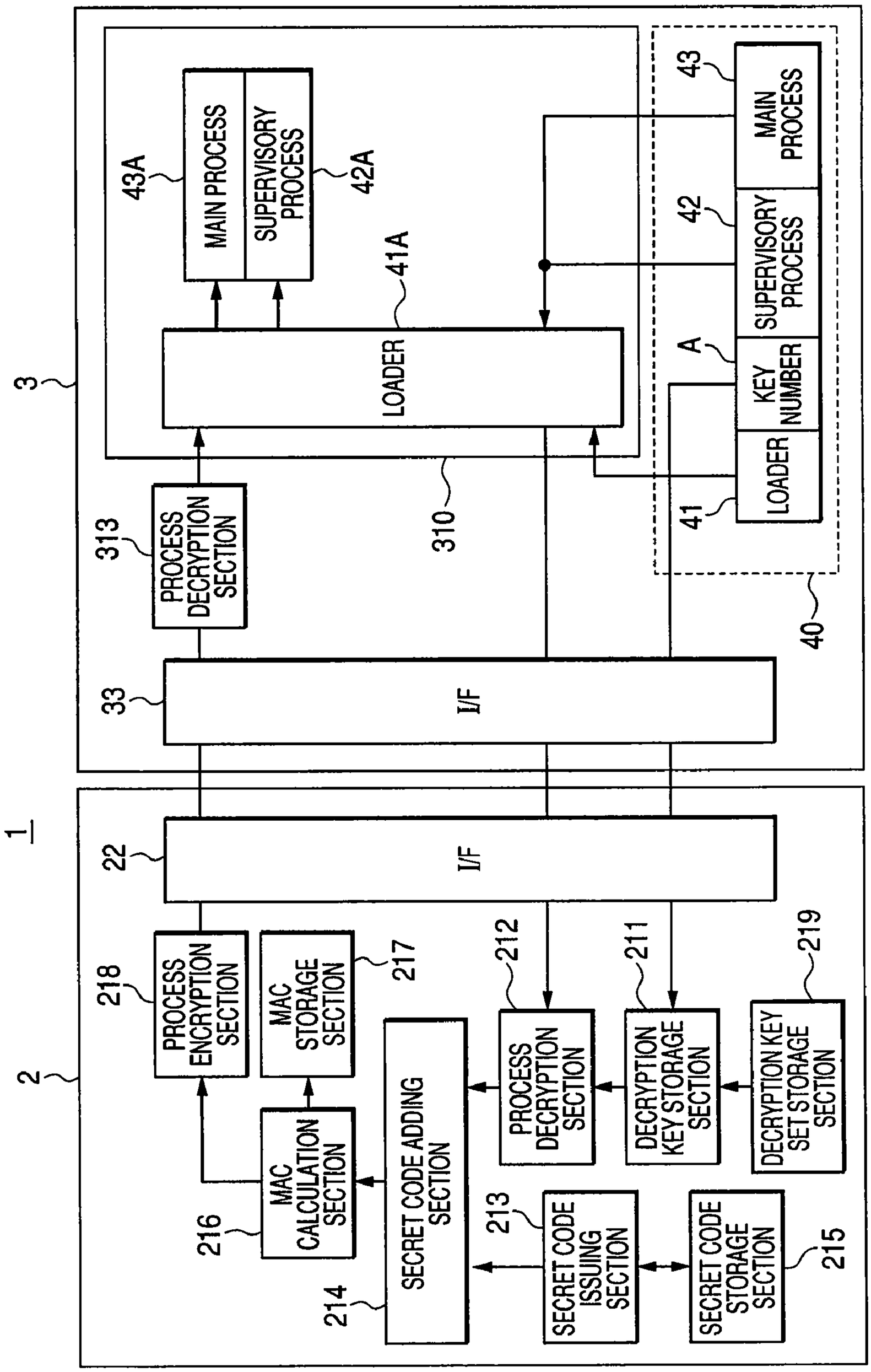
1
2
3
MAIN PROCESS
SUPERVISORY PROCESS
43A
42A
41A
LOADER
310
313
PROCESS DECRYPTION SECTION
33
I/F
22
I/F
218
PROCESS ENCRYPTION SECTION
MAC STORAGE SECTION
217
MAC CALCULATION SECTION
216
SECRET CODE ADDING SECTION
214
212
PROCESS DECRYPTION SECTION
211
DECRYPTION KEY STORAGE SECTION
219
DECRYPTION KEY SET STORAGE SECTION
213
SECRET CODE ISSUING SECTION
SECRET CODE STORAGE SECTION
215
43
MAIN PROCESS
42
SUPERVISORY PROCESS
A
KEY NUMBER
LOADER
41
40

FIG. 8

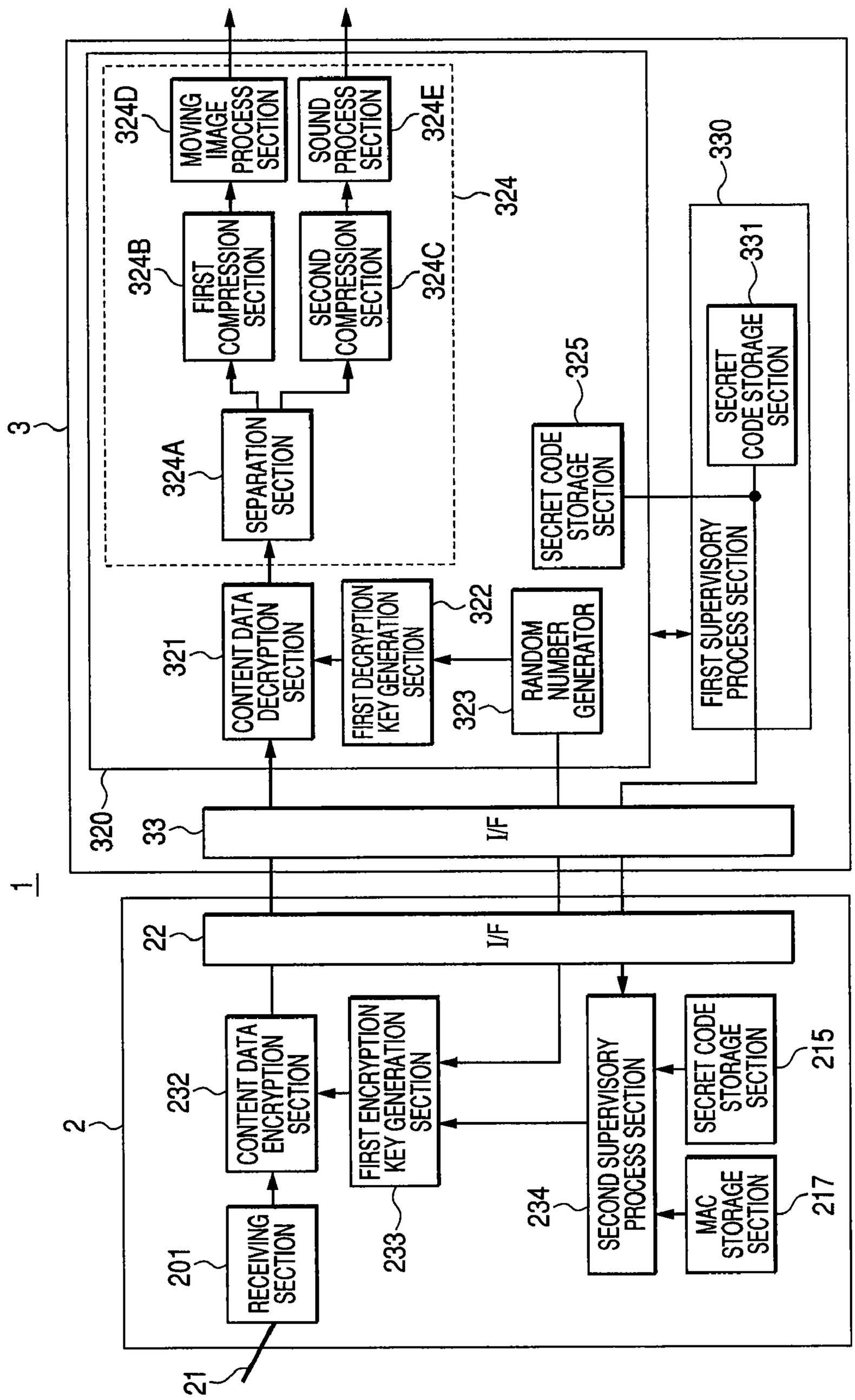
1
2
3
21
22
I/F
201
RECEIVING SECTION
232
CONTENT DATA ENCRYPTION SECTION
233
FIRST ENCRYPTION KEY GENERATION SECTION
234
SECOND SUPERVISORY PROCESS SECTION
215
SECRET CODE STORAGE SECTION
217
MAC STORAGE SECTION
320
33
I/F
321
CONTENT DATA DECRYPTION SECTION
322
FIRST DECRYPTION KEY GENERATION SECTION
323
RANDOM NUMBER GENERATOR
324
324A
SEPARATION SECTION
324B
FIRST COMPRESSION SECTION
324C
SECOND COMPRESSION SECTION
324D
MOVING IMAGE PROCESS SECTION
324E
SOUND PROCESS SECTION
325
SECRET CODE STORAGE SECTION
330
FIRST SUPERVISORY PROCESS SECTION
331
SECRET CODE STORAGE SECTION

FIG. 9

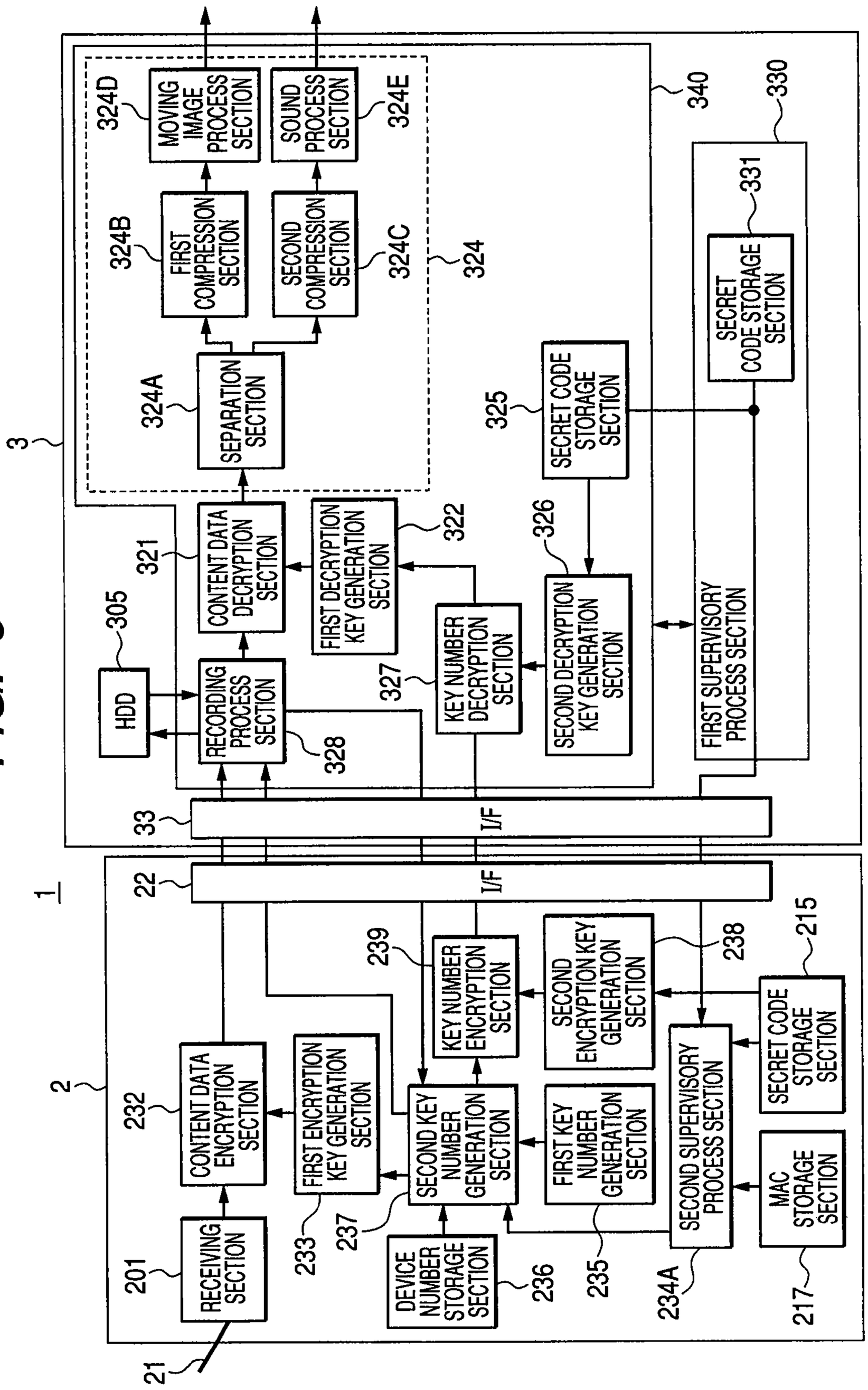
1
2
3
21
22
I/F
201
RECEIVING SECTION
232
CONTENT DATA ENCRYPTION SECTION
233
FIRST ENCRYPTION KEY GENERATION SECTION
237
SECOND KEY NUMBER GENERATION SECTION
236
DEVICE NUMBER STORAGE SECTION
235
FIRST KEY NUMBER GENERATION SECTION
234A
SECOND SUPERVISORY PROCESS SECTION
217
MAC STORAGE SECTION
215
SECRET CODE STORAGE SECTION
238
SECOND ENCRYPTION KEY GENERATION SECTION
239
KEY NUMBER ENCRYPTION SECTION
33
I/F
305
HDD
328
RECORDING PROCESS SECTION
321
CONTENT DATA DECRYPTION SECTION
322
FIRST DECRYPTION KEY GENERATION SECTION
327
KEY NUMBER DECRYPTION SECTION
326
SECOND DECRYPTION KEY GENERATION SECTION
325
SECRET CODE STORAGE SECTION
340
FIRST SUPERVISORY PROCESS SECTION
330
331
SECRET CODE STORAGE SECTION
324
324A
SEPARATION SECTION
324B
FIRST COMPRESSION SECTION
324C
SECOND COMPRESSION SECTION
324D
MOVING IMAGE PROCESS SECTION
324E
SOUND PROCESS SECTION

# DIGITAL BROADCASTING RECEIVING SYSTEM AND DIGITAL BROADCASTING RECEIVING DEVICE

## CROSS REFERENCES TO RELATED APPLICATIONS

The present application claims priority to Japanese Patent Application JP 2005-325361 filed in the Japan Patent Office on Nov. 9, 2005, the entire contents of which being incorporated herein by reference.

## BACKGROUND

The present disclosure relates to a digital broadcasting receiving system and a digital broadcasting receiving device capable of protecting digital broadcasting contents.

Domestic terrestrial digital broadcasting receiving devices are obligated to be compliant with the provisions stipulated in chapter 8 of ARIB TR-B 14 and ARIB TR-B15. Thus, protection of the broadcast contents is intended.

However, in the case in which dedicated application software is installed in a commercial personal computer (PC) to receive the terrestrial digital broadcast, since the dedicated application software can easily be altered, there are many cases in which it becomes difficult to be compliant with the provision of making it difficult to break down the content protection function including copy control.

This is caused by, for example, a tool and an analysis device for analyzing software that can easily be obtained to analyze the codes of the software and put back the analyzed software to the previous state.

As a method of preventing alteration of the received content, there has been from the past a method of encrypting the content when the digital broadcast content is delivered between two devices as described in JP-A-2005-057459.

However, even if such a system for protecting the contents is used, the program file for executing the system is still at risk for alteration.

## SUMMARY

In view of the existing current conditions, it is desirable to provide a digital broadcasting receiving system which is a system for receiving content data of the digital broadcasting, and capable of protecting the content by executing a program whose alteration is prevented, and a digital broadcasting receiving device.

According to an embodiment, there is provided a digital broadcasting receiving system including an information processing device for executing a program file including a loader, a main process that is at least partially encrypted, and a supervisory process that is at least partially encrypted and for supervising main processing according to the main process, and a digital broadcasting receiving device detachably connected to the information processing device and for receiving a broadcast signal of digital broadcasting, wherein the information processing device includes storage means on which the loader is developed in a executable condition, and transmits the main process that is at least partially encrypted and the supervisory process that is at least partially encrypted to the digital broadcasting receiving device, the digital broadcasting receiving device includes receiving means for receiving the broadcast signal of the digital broadcasting to generate content data, decryption key storage means for storing a decryption key, process decryption means for decrypting the main process that is at least partially encrypted and the supervisory process that is at least partially encrypted received from the information processing device using the decryption key stored in the decryption key storage means, protective data adding means for adding protective data to the main process decrypted by the process decryption means, and first protective data storage means for storing the protective data, the information processing device, in accordance with the loader, receives the decrypted main process and the decrypted supervisory process from the digital broadcasting receiving device, and develops the decrypted main process and the decrypted supervisory process on the storage means included in the information processing device.



According to another embodiment, there is provided a digital broadcasting receiving device detachably connected to an information processing device for executing a program file including a loader, a main process that is at least partially encrypted, and a supervisory process that is at least partially encrypted and for supervising main processing according to the main process for receiving a broadcast signal of digital broadcasting, and to which the main process that is at least partially encrypted and the supervisory process that is at least partially encrypted are transmitted in accordance with the loader from the information processing device provided with a storage means on which the loader is developed in a executable condition, including receiving means for receiving the broadcast signal of the digital broadcasting to generate content data, decryption key storage means for storing a decryption key, process decryption means for decrypting the main process that is at least partially encrypted and the supervisory process that is at least partially encrypted transmitted from the information processing device using the decryption key stored in the decryption key storage means, protective data adding means for adding protective data to the main process decrypted by the process decryption means, and first protective data storage means for storing the protective data.

According to the embodiments, when the program file used for the digital broadcasting receiving system is developed on the storage means, the previously encrypted main process and the previously encrypted supervisory process can be decrypted, and further, the program file can be protected by adding the protective data to the main process.

Additional features and advantages are described herein, and will be apparent from, the following Detailed Description and the figures.

## BRIEF DESCRIPTION OF THE FIGURES

FIG. **1** is a diagram showing an exterior configuration of a digital broadcasting receiving system according to an embodiment.

FIG. **2** is a diagram showing an interior configuration of the digital broadcasting receiving device according to an embodiment.

FIG. **3** is a diagram showing an interior configuration of a PC according to an embodiment.

FIG. **4** is a configuration diagram of a program file according to an embodiment.

FIG. **5** is a diagram showing a process step in which a digital broadcasting receiving system according to an embodiment develops the program file on storage means.

FIG. **6** is a diagram showing a process step in which a digital broadcasting receiving system according to an embodiment develops the program file on storage means.

FIG. **7** is a diagram showing a process step in which a digital broadcasting receiving system according to an embodiment develops the program file on storage means.

FIG. **8** is a diagram showing a data processing operation of content data executed by the digital broadcasting receiving system according to an embodiment.

FIG. **9** is a diagram showing a data processing operation of content data executed by the digital broadcasting receiving system according to an embodiment.

## DETAILED DESCRIPTION

Hereinafter, embodiments are described in detail with reference to the accompanying drawings.

FIG. **1** is a diagram showing an exterior configuration of a digital broadcasting receiving system **1** according to an embodiment.

The digital broadcasting receiving system **1** is configured with a digital broadcasting receiving device **2** and a PC **3** as an information processing device detachably connected to each other.

The digital broadcasting receiving device **2** has an exterior configuration of connecting an antenna **21** and an interface (I/F) **22** such as a universal serial bus (USB) terminal to a main body.

Further, the PC **3** has an exterior configuration as a typical PC including a display screen **31**, an input key **32**, an interface (I/F) **33** such as a USB inlet, a loudspeaker **34**, and so on.

If the digital broadcasting receiving device **2** is connected thereto via the interface (I/F) **22** and the interface (I/F) **33**, the digital broadcasting receiving device **2** receives a broadcast signal of one-segment broadcasting of the terrestrial digital broadcasting via the antenna **21**, and the PC **3** performs a predetermined signal process to display a moving image of the one-segment broadcasting on the display screen **31**, and to output a sound from the loudspeaker **34**.

It should be noted that the one-segment broadcasting denotes simplified moving picture broadcasting utilizing the strongest one layer of segments defined by dividing a 6 MHz band forming one cannel of the terrestrial digital broadcasting into thirteen segments, and is applied to mobile terminal devices such as a PC. It should also be noted that a receiving section **201** is assumed to be able to receive not only the broadcast signal of the one-segment broadcasting but also the broadcast signal of full segment broadcasting in the terrestrial digital broadcasting.

FIG. **2** is a functional block diagram showing an interior configuration of the digital broadcasting receiving device **2** used for the digital broadcasting system **1** according to an embodiment.

The digital broadcasting receiving device **2** is configured with the interface (I/F) **22**, the receiving section **201** for receiving a broadcast signal of the one-segment broadcasting via the antenna **21**, a read only memory (ROM) **202**, a random access memory (RAM) **203**, and a CPU **204** all connected to an internal bus **205**.

FIG. **3** is a functional block diagram showing an interior configuration of the PC **3** used for the digital broadcasting system **1** according to an embodiment.

The PC **3** is configured with the interface (I/F) **33**, an input section **301** for inputting data control by the user from the input key **32**, a ROM **302**, a RAM **303**, a CPU **304**, a hard disk drive (HDD) **305**, and a display **306** for displaying a moving picture on the display screen **31** and outputting a sound from the loudspeaker **34** all connected to an internal bus **307**.

A program file **4** of dedicated application software used for the digital broadcasting receiving system **1** according to an embodiment is configured with three programs, namely a loader **41**, a supervisory process **42**, and a main process **43** as shown in FIG. **4**, wherein the supervisory process **42** and the main process **43** are previously encrypted. The program file **4** is supplied by downloading via a network such as the Internet or with a recording medium such as a compact disc read only memory) CD-ROM. The program file **4** is temporarily stored in a storage device provided in the PC **3**.

FIG. **5** is a diagram showing how the digital broadcasting receiving system **1** according to an embodiment develops the program file **4** on the storage section **310** provided in the PC **3**.

It should be noted that each of the functional blocks performing a series of data processes in the digital broadcasting receiving system **1** is provided inside the CPU. Further, each of the functional blocks for temporarily storing the series of data is a partial area of the RAM. Still further, the program to be performed by the CPU is written in the ROM.

The loader **41** out of the program file **4** is developed on the storage section **310**, and the supervisory process **42** and the main process **43** are transmitted to a process decryption section **212** in the digital broadcasting receiving device **2** via the interface (I/F) **33** and the interface (I/F) **22** in accordance with the loader **41** thus enabled.

A decryption key storage section **211** stores decryption keys for decrypting the encrypted supervisory process **42** and the encrypted main process **43**.

The process decryption section **212** decrypts the encrypted supervisory process **42** and the encrypted main process **43** using the decryption keys stored in the decryption key storage section **211**.

A secret code issuing section **213** issues secret codes and supplies a secret code adding section **214** and a secret code storage section **215** with the secret codes every time the digital broadcasting receiving device **2** receives the supervisory process **42** and the main process **43**.

The secret code adding section **214** adds the secret codes supplied from the secret code issuing section **213** to the decrypted supervisory process **42** and the decrypted main process **43**, and then supplies an MAC calculation section **216** with the supervisory process **42** and the main process **43**.

The secret code storage section **215** stores the secret codes supplied from the secret code issuing section **213**.

The secret code adding section **214** adds the secret codes supplied from the secret code issuing section **213** to the decrypted supervisory process **42** and the decrypted main process **43**, to supply the message authentication code (MAC) calculation section **216** with the supervisory process **42** added with the secret code and the main process **43** added with the secret code.

The MAC calculation section **216** calculates the MAC of the main process **43**, and then supplies an MAC storage section **217** with the MAC. It should be noted here that the MAC can be a keyed-hashing for message authentication code (HMAC) using a hash function. If the MAC calculation section **216** uses the HMAC, the MAC calculation section **216** calculates a characteristic number based on the original program of the main process **43** by the hash function, and regards the characteristic number as the MAC.

Further, the MAC calculation section **216** transmits the supervisory process **42** and the main process **43** to the PC **3** via the interface (I/F) **22** and the interface (I/F) **33**.

The MAC storage section **217** stores the MAC supplied from the MAC calculation section **216**.

Further, although in the digital broadcasting receiving system **1** the secret code and the MAC are used as protection data for protecting the main process, the protection data is not limited thereto.

In accordance with the loader **41**A, the PC **3** temporarily stores the supervisory process **42** and the main process **43** in

the storage section **310** and then develops them thereon in response to receiving the supervisory process **42** and the main process **43** from the MAC calculating section **634** via the interface (I/F) **22** and the interface (I/F) **33**. It should be noted here that the supervisory process and the main process developed on the storage section **310** and enabled to be executed are referred to as the supervisory process **42**A and the main process **43**A, respectively.

When execution of the supervisory process **42**A and the main process **43**A is stopped, the storage section **310** is released, and accordingly, the supervisory process **42**A and the main process **43**A are erased from the storage section **310**.

When the supervisory process **42** and the main process **43** pass through the interface (I/F) **22** and the interface (I/F) **33**, there the binary codes of the program file **4** might be taken out between these interfaces.

Therefore, in order to enhance the protection function of the program file **4**, it is possible to provide a process encryption section **218** in the digital broadcasting receiving device and a process decryption section **313** in the PC **3**, respectively, in addition to the configuration shown in FIG. **5** as shown in FIG. **6**. It should be noted that the same components as in FIG. **5** will be denoted with the same reference numerals, and the detailed descriptions therefor will be omitted.

The secret code adding section **214** adds the secret codes to the decrypted supervisory process **42** and the decrypted main process **43**, and subsequently the process encryption section **218** encrypts the supervisory process **42** and the main process **43** both decrypted by the process decryption section **212** after the MAC calculation section **216** calculates the MAC of the main process **43**. After then, the process encryption section **218** transmits the encrypted supervisory process **42** and the encrypted main process **43** to the process decryption section **313** via the interface (I/F) **22** and the interface (I/F) **33**.

The process decryption section **313** decrypts the supervisory process **42** and the main process **43** received from the process encryption section **218**, and then temporarily stores the supervisory process **42** and the main process thus decrypted in the storage section **310** and develops them on the storage section **310**.

It should be noted here that the encryption key used by the process encryption section **218** and the decryption key used by the process decryption section **313** are set to have the same values, and further, the encryption key and the decryption key are set to have different values from the value of the decryption key stored in the decryption key storage section **211**.

Although in the configurations shown in FIGS. **5** and **6**, as the encryption keys for encrypting the supervisory process **42** and the main process **43** in the program file **4**, the same values are used for all of the program files, it is possible to alter the values of the encryption keys for every version or variation of the program file, for example. Therefore, as shown in FIG. **7**, it is also possible to use a program file **40** obtained by adding a key number A to the program file **4** and to further provide a decryption key set storage section **219** to the decryption key storage section **211**. It should be noted that the same components as in FIG. **6** will be denoted with the same reference numerals, and the detailed descriptions therefor will be omitted.

The program file **40** has the key number A of the encryption key used for encrypting the supervisory process **42** and the main process **43** attached thereto.

The decryption key set storage section **219** stores a number of decryption key sets each composed of the key number attached to every program file and the decryption key corresponding to the key number.

In response to receiving the supervisory process **42** and the main process **43**, the decryption key storage section **211** selects the key number with the same value as the key number A from the decryption key set storage section **219**, takes out the decryption key corresponding to this key number, and stores it.

Since in the configuration shown in FIG. **7**, the unique key number is attached to every program file, and the encrypted supervisory process **42** and the encrypted main process **43** are decrypted using the decryption key corresponding to the key number, the protection function of the program file can further be enhanced.

It should be noted that although the whole of the supervisory process **42** and the whole of the main process **43** are encrypted and decrypted here, it is also possible to encrypt and decrypt only a part of each of the processes having particular needs for preventing alteration.

In the digital broadcasting receiving system **1** according to an embodiment, as described above, the digital broadcasting receiving device **2** and the PC **3** receives the one-segment broadcasting signal and performs a predetermined data process as shown in FIG. **8** in accordance with the supervisory process **42**A and the main process **43**A, which have thus developed on the storage section **310** and become executable.

FIG. **8** is a diagram for explaining a first embodiment of the digital broadcasting receiving system **1** receiving the one-segment broadcasting signal and performing the predetermined data process.

In the PC **3**, the main process section **320** according to the main process **43**A is provided with a content data decryption section **321**, a first decryption key generation section **322**, a random number generator **323**, a content reproduction section **324**, and a secret code storage section **325**.

Further, a first supervisory process section **330** for supervising the main process section **320** in accordance with the supervisory process **42**A is provided with a secret code storage section **331**.

In accordance with channel selection control input to the input section **301** in the PC **3**, the receiving section **201** in the digital broadcasting receiving device receives the broadcasting signal of the one-segment broadcasting via the antenna **21**, selects the frequency of a specific broadcasting station of the one-segment broadcasting, and then decrypts the radio wave of the broadcasting station to generate the video and audio content data, and supplies a content data encryption section **232** with the data.

The random number generator **323** periodically generates a random number as the predetermined data described above to supply it to the first decryption key generation section **322**, and also supplies the first encryption key generation section **233** in the digital broadcasting receiving device **2** with the generated random number via the interface (I/F) **33** and the interface (I/F) **22**.

The first encryption key generation section **233** generates the encryption key using the random number supplied from the random number generator **323**.

The first decryption key generation section **322** generates the decryption key using the random number supplied from the random number generator **323**.

The content data encryption section **232** encrypts the content data applying a common key encryption method such as the data encryption standard (DES) or the wired equivalent privacy (WEP).

The content data encryption section **232** encrypts the content data using the encryption key generated by the first encryption key generation section **233**, and transmits it to the

content data decryption section **321** provided to the main process section **320** via the interface (I/F) **22** and the interface (I/F) **33**.

The first encryption key generation section **233** and the first decryption key generation section **322** respectively generate the encryption key and the decryption key by applying a common key generation algorithm on the common random number in accordance with the common key encryption method described above. It should be noted that the key length of the generated encryption and decryption keys is assumed to be equal to or greater than 56 bits.

Thus, the values of the encryption key and the decryption key respectively generated by the first encryption key generation section **233** and the first decryption key generation section **322** become the same. Further, since the key generation algorithm is kept confidential, even if the value of the random number is somehow decrypted, there is no chance that the value of the encryption key and the value of the decryption key can be decrypted.

The content data decryption section **321** decrypts the content data, which is encrypted by the content data encryption section **232**, using the decryption key generated by the first decryption key generation section **322**.

The content reproduction section **324** is provided with a separation section **324**A, a first compression section **324**B, a second compression section **324**C, a moving image process section **324**D, and a sound process section **324**E.

As the separation section **324**A, two-bit demultiplexing is used here. The two-bit demultiplexing divides the encrypted and then decrypted content data into content data for moving image and content data for sound.

The first compression section **324**B performs compression of the content data for moving image using H.264 to generate moving picture compression data.

The second compression section **324**C performs compression of the content data for sound using advanced audio coding (AAC) to generate audio compression data.

The moving image process section **324**D performs a moving image process using the moving picture compression data to supply the display section **306** with a moving picture signal.

The sound process section **324**E performs a sound process using the audio compression data to supply the display section **306** with an audio signal.

The secret code storage section **325** stores the secret codes attached to the main process **43**.

The first supervisory process section **330** periodically takes out the secret codes respectively stored in the secret code storage section **325** and the secret code storage section **331** as the protective data of the main process section **320**, and transmits to the second supervisory process section **234** in the digital broadcasting receiving device **2** via the interface (I/F) **33** and the interface (I/F) **22**.

Further, the first supervisory process section **330** periodically calculates the MAC of the main process section, and transmits the MAC to the second supervisory process section **234** as the protective data of the main process section **320** in accordance with the main process **43**A via the interface (I/F) **33** and the interface (I/F) **22**.

In the case in which, for example, the second supervisory process section **234** does not receive these protective data periodically from the first supervisory process section **330** or it receives other data than the protective data, the supervisory process section **234** judges that some sort of problem has occurred in the system, and generates supervisory result data indicative of malfunction of the system to supply the first encryption key generation section **233** with the supervisory result data. The first encryption key generation section **233** changes the value of the encryption key in accordance with the supervisory result data. In this case, the display section **306** in the PC **3** is disabled from outputting a moving image or a sound.

Further, the second supervisory process section **234** compares the value of the secret code received from the first supervisory process section **330** with the value of the secret code stored in the secret code storage section **215**. Subsequently, the second supervisory process section **234** supplies the first encryption key generation section **233** with the supervisory result data based on the result of the comparison.

The first encryption key generation section **233** supplied with the supervisory result data changes the value of the encryption key if the values of the secret codes are different from each other.

Further, the second supervisory process section **234** compares the MAC received from the first supervisory process section **330** with the MAC stored in the MAC storage section **217**. Subsequently, the second supervisory process section **234** generates the supervisory result data based on the result of the comparison to supply it to the first encryption key generation section **233**.

The first encryption key generation section **233** supplied with the supervisory result data changes the value of the encryption key if the values of the MACs are different from each other.

In the digital broadcasting receiving system **1** provided with the configuration described above, when the receiving section **201** supplies the content data encryption section **232** with the content data of the one-segment broadcasting, the content data encryption section **232** encrypts the content data using the encryption key generated by the first encryption key generation section **233**, and supplies the content data decryption section **321** with the encrypted content data via the interface (I/F) **22** and the interface (I/F) **33**. The content data decryption section **321** then decrypts the content data encrypted by the content data encryption section **232** using the decryption key generated by the first decryption key generation section **322**, and supplies the separation section **324**A with the decrypted content data. The encryption key and the decryption key are generated by applying the common key generation algorithm on the random number generated by the random number generator **323**, and accordingly become the same values.

Further, in the digital broadcasting receiving system **1** provided with the configuration described above, the first supervisory process section **330** according to the supervisory process **42**A periodically transmits the secret code and the MAC to the second supervisory process section **234** as the protective data. The second supervisory process section **234** compares the secret code stored in the secret code storage section **215** and the MAC stored in the MAC storage section **217** with the secret code and the MAC received from the first supervisory process section **330**, respectively, to generate the supervisory result data. If there is a discrepancy between the protective data compared based on the supervisory result data, the first encryption key generation section **233** changes the encryption key.

Further, if any problems have occurred in the system, the second supervisory process section **234** generates the supervisory result data accordingly. Further, the first encryption key generation section **233** changes the encryption key in accordance with the supervisory result data.

As described above, the digital broadcasting receiving system **1** can be stopped by changing the encryption key if some sort of problem has been recognized.

Although the first embodiment shown in FIG. **8** is applied only to the case in which the received one-segment broadcast program is reproduced in real time, the digital broadcasting receiving system **1** can also be configured to further perform a process of recording the encrypted content data on an HDD as a second embodiment shown in FIG. **9**. It should be noted that the same components as in FIG. **8** will be denoted with the same reference numerals, and the detailed descriptions therefor will be omitted.

A digital broadcasting receiving device **2** shown in FIG. **9** is configured by further providing a first key number generation section **235**, a device number storage section **236**, a second key number generation section **237**, a second encryption key generation section **238**, and a key number encryption section **239** to the functional block provided to the digital broadcasting receiving device **2** shown in FIG. **8**.

Further, the main process section **340** is configured to further include a second decryption key generation section **326**, a key number decryption section **327**, and a recording process section **328**.

The first key number generation section **235** periodically generates a random number as the predetermined data, and generates a first key number by applying a predetermined algorithm on the random number. Subsequently, the first key number generation section **235** supplies the second key number generation section **237** with the first key number.

Further, the first key number generation section **235** transmits the first key number to the recording process section **328** via the interface (I/F) **22** and the interface (I/F) **33**.

The device number storage section **236** stores a unique device number assigned to every digital broadcasting receiving device, and supplies the second key number generation section **237** with the device number of the digital broadcasting receiving device **2**.

The second key number generation section **237** generates a second key number using the first key number supplied from the first key number generation section **235** and the device number stored in the device number storage section **236**, and supplies the key number encryption section **239** with the second key number.

The first encryption key generation section **233** generates the encryption key for encrypting the content data in accordance with the second key number generated by the second key number generation section **236**.

When recording the content, the recording process section **328** records the content data received from the content data encryption section **232** via the interface (I/F) **22** and the interface (I/F) **33** and the first key number received from the first key number generation section **235** via the interface (I/F) **22** and the interface (I/F) **33** on the HDD **305**.

Further, when reproducing the content, the recording process section **328** retrieves the encrypted content data and the encrypted first key number from the HDD **305** to supply the content data decryption section **321** with the encrypted content data, and transmits the first key number to the second key number generation section **237** via the interface (I/F) **22** and the interface (I/F) **33**.

In response to receiving the first key number from the recording process section **328** via the interface (I/F) **33** and the interface (I/F) **22**, the second key number generation section **237** performs a predetermined calculation using the first key number and the device number stored in the device number storage section **236** to generate the second key number, and then supplies the key number encryption section **239** with the second key number.

The second encryption key generation section **238** generates the encryption key used by the key number encryption section **239** in accordance with the secret code stored in the secret code storage section **215**, and supplies the key number encryption section **239** with the encryption key.

The key number encryption section **239** encrypts the key number using the encryption key supplied from the second encryption key generation section **238**, and transmits the encrypted key number to the key number decryption section **327** in the main process section **340** via the interface (I/F) **22** and the interface (I/F) **33**.

The secret code storage section **325** stores the secret code attached to the main process **43**, and supplies the second decryption key generation section **326** with the secret code.

The second decryption key generation section **326** generates the decryption key used by the key number decryption section **327** in accordance with the secret code supplied from the secret code storage section **325**, and supplies the key number decryption section **327** with the decryption key.

In response to receiving the encrypted key number from the key number encryption section **239** via the interface (I/F) **22** and the interface (I/F) **33**, the key number decryption section **327** decrypts the encrypted key number using the decryption key supplied from the second decryption key generation section **326**, and supplies it to the first decryption key generation section **322**.

The first decryption key generation section **322** generates the decryption key used by the content data decryption section **321** using the key number supplied from the key number decryption section **327**, and supplies the content data decryption section **321** with the decryption key.

When the encrypted content data is supplied from the recording process section **328**, the content data decryption section **321** decrypts the encrypted content data using the decryption key supplied from the first decryption key generation section **235**.

In the case in which, for example, the second supervisory process section **234**A has recognized an abnormality such as failure in periodically receiving the protective data from the first supervisory process section **330** or reception of different data than the protective data, it judges that some sort of problem has occurred in the system, and generates supervisory result data indicative of malfunction of the system to supply the second key number generation section **237** with the supervisory result data. The second key number generation section **237** changes the value of the key number in accordance with the supervisory result data. In this case, the display section **306** in the PC **3** is disabled to output a moving image or a sound.

Further, the second supervisory process section **234**A compares the value of the secret code received from the first supervisory process section **330** with the value of the secret code stored in the secret code storage section **215**. Subsequently, the second supervisory process section **234**A supplies the second key number generation section **237** with the supervisory result data based on the result of the comparison.

The second key number generation section **237** supplied with the supervisory result data changes the value of the key number if the values of the secret codes are different from each other.

Further, the second supervisory process section **234**A compares the MAC received from the first supervisory process section **330** with the MAC stored in the MAC storage section **217**. Subsequently, the second supervisory process section **234**A supplies the second key number generation section **237** with the supervisory result data based on the result of the comparison.

The second key number generation section **237** supplied with the supervisory result data changes the value of the key number if the values of the MACs are different from each other.

In the second embodiment described above, the first key number based on the periodically generated random number and the encrypted content data are recorded on the HDD **305**.

Further, in the second embodiment, when reproducing the content of the one-segment broadcasting recorded on the HDD **305**, the first key number and the encrypted content data are retrieved from the HDD **305**, and the first key number is transmitted to the digital broadcasting receiving device **2** and is encrypted. Subsequently, the encrypted key number is transmitted again to the main process section **320** to decrypt the encrypted key number using the decryption key based on the secret code stored in the secret code storage section **325**. After then, the decryption key is generated in accordance with the decrypted key number, and the encrypted content data is decrypted using the decryption key.

As described above, since the first key number is recorded together with the content data in recording the content data, the value of the encryption key of the content data based on the second key number generated using the first key number and the device number does not match the value of the decryption key of the content data. Thus, the content can be prevented from being reproduced even if some sort of alteration is made in the content data while recorded on the HDD **305** and thus key number is altered.

It should be appreciated that although in the embodiments described above, the PC is used as the information processing device, any other information processing device can be adopted having similar interior configurations to the PC **3** described above, and a portable terminal such as a cellular phone can also be adopted.

Further, although in the embodiments described above the receiving section **201** is assumed to receive the broadcast signal of the one-segment broadcasting of the terrestrial digital broadcasting, any broadcast signals can be included providing they are broadcast signals of digital broadcasting.

Further, although in the embodiments described above, the secret code issuing section **213**, the secret code adding section **214**, the MAC calculation section **216**, the secret code storage section **215**, and the MAC storage section **217** are provided as the means for protecting the main process, the means for protecting the main process is not limited thereto.

Further, although in the embodiments described above, the program file of the dedicated application software includes the different two processes, namely the supervisory process **42** and the main process **43**, it is also possible that a single process has the functions of the main process and the supervisory process.

Further, although in the embodiments described above, the whole of each of the supervisory process **42** and the main process **43** is encrypted and decrypted, it is also possible to select a part of each of the processes which is particularly necessary to be protected from alteration, and to encrypt and decrypt only that part.

Further, although in the embodiments described above, the random number is used as the predetermined data, it should be appreciated that any data can be adopted providing the encryption key, the decryption key, and the key number can be generated from the data.

It should be understood by those skilled in the art that various modifications, combinations, sub-combinations, and alterations may occur depending on design requirements and the other factors insofar as they are within the scope of the appended claims or the equivalents thereof.

It should be understood that various changes and modifications to the presently preferred embodiments described herein will be apparent to those skilled in the art. Such changes and modifications can be made without departing from the spirit and scope of the present subject matter and without diminishing its intended advantages. It is therefore intended that such changes and modifications be covered by the appended claims.

The invention is claimed as follows:

**1**. A digital broadcasting receiving system, comprising:

an information processing device for executing a program file including a loader, a main process that is at least partially encrypted, and a supervisory process that is at least partially encrypted and for supervising main processing according to the main process; and

a digital broadcasting receiving device detachably connected to the information processing device and for receiving a broadcast signal of digital broadcasting;

wherein the information processing device includes storage section on which the loader is developed in a executable condition, and transmits the main process that is at least partially encrypted and the supervisory process that is at least partially encrypted to the digital broadcasting receiving device,

wherein said the digital broadcasting receiving device includes:

a receiver for receiving the broadcast signal of the digital broadcasting to generate content data,

a decryption key storage section for storing a decryption key,

a process decryption section for decrypting the main process and the supervisory process received from the information processing device using the decryption key stored in the decryption key storage section,

a protective data adding section for adding protective data to the main process decrypted by the process decryption section, and

a first protective data storage section for storing the protective data,

the information processing device, in accordance with the loader, receives the decrypted main process and the decrypted supervisory process from the digital broadcasting receiving device, and develops the decrypted main process and the decrypted supervisory process on the storage section included in the information processing device.

**2**. The digital broadcasting receiving system of claim **1**, wherein:

(a) the protective data adding section issues a secret code and adds the secret code to the main process decrypted by the process decryption section as the protective data; and

(b) the first protective data storage section stores the secret code issued by the protective data adding section.

**3**. The digital broadcasting receiving system of claim **2**, wherein:

(a) the protective data adding section calculates a unique value generated in accordance with a program sentence of the main process added with the secret code, and adds the unique value to the main process as the protective data; and

(b) the first protective data storage section stores the unique value of the main process.

**4**. The digital broadcasting receiving system of claim **1**, wherein:

(a) the digital broadcasting receiving device further includes a process encryption section for encrypting at

least a part of the main process decrypted by the process decryption section and at least a part of the supervisory process decrypted by the process decryption section; and

(b) the information processing device further includes a process decryption section for decrypting the main process that is at least partially encrypted and the supervisory process that is at least partially encrypted received from the process encryption section.

**5**. The digital broadcasting receiving system of claim **1**, wherein:

(a) the program file is added with a key number of an encryption key used for encrypting at least a part of the main process and at least a part of the supervisory process;

(b) the digital broadcasting receiving device further includes:

(i) a process encryption section for encrypting at least a part of the main process decrypted by the process decryption section and at least a part of the supervisory process decrypted by the process decryption section; and

(ii) a decryption key set storage section for storing a plurality of decryption key sets, each decryption key set comprising the key number added to every program file and the decryption key corresponding to the key number;

(c) the information processing device further includes a process decryption section for decrypting the main process that is at least partially encrypted and the supervisory process that is at least partially encrypted received form the process encryption section; and

(d) the encryption key storage section selects the decryption key corresponding to the key number having the same value as the key number added to the program file from the decryption key set storage section and stores the selected decryption key.

**6**. The digital broadcasting receiving system of claim **1**, wherein:

(a) the digital broadcasting receiving device includes:

(i) a first encryption key generation section for generating a content data encryption key based on a predetermined signal; and

(ii) a content data encryption section for encrypting the content data generated by the receiving section using the content data encryption key generated by the first encryption key generation section;

(b) the information processing device includes:

(i) a main process section for performing a predetermined process in accordance with the main process developed on the storage section; and

(ii) a first supervisory process section for supervising the main process section in accordance with the supervisory process developed on the storage section;

(c) wherein the main process section includes:

a first decryption key generation section for generating a content data decryption key based on predetermined data;

(ii) a content data decryption section for decrypting the content data received from the content data encryption section using the content data decryption key generated by the first decryption key generation section;

(iii) a content reproduction section for reproducing the content from the content data decrypted by the content data decryption section; and

(iv) a second protective data storage section for storing protective data added to the main process by main process protection section; and

(d) the first supervisory process section transmits the protective data stored in the second protective data storing section to the digital broadcasting receiving device; and

(e) the digital broadcasting receiving device includes a second supervisory process section for generating supervisory result data based on the protective data received from the first supervisory process section and the protective data stored in the first protective data storage section.

**7**. The digital broadcasting receiving system of claim **6**, wherein:

(a) the digital broadcasting receiving device includes:

(i) a first key number generation section for generating a first key number based on predetermined data;

(ii) a device number storage section for storing a device number of the digital broadcasting receiving device;

(iii) a second key number generation section for generating a second key number;

(iv) a second encryption key generation section for generating a second encryption key in accordance with the protective data stored in the first protective data storage section; and

(v) a key number encryption section for encrypting the second key number generated by the second key number generation section using the second encryption key generated by the second encryption key generation section;

(b) the main process section includes:

(i) recording process section for writing and/or retrieving predetermined data to and/or from recording section provided to the information processing device;

(ii) second decryption key generation section for generating a second decryption key in accordance with the protective data stored in the second protective data storage section; and

(iii) key number decryption section for decrypting the second key number received from the key number encryption section using the second decryption key generated by the second decryption key generation section;

(c) the second key number generation section supplies the encryption key generation section with the second key number generated using the first key number and the device number;

(d) the recording process section writes the content data and the first key number received from the content data encryption section and the first key number generation section, respectively, in the recording section, retrieves the content data and the first key number written in the recording section to supply the content data decryption section with the content data and to transmit the first key number to the second key number generation section;

(e) the second key number generation section supplies the key number encryption section with the second key number generated using the first key number received from the recording process section and the device number;

(f) the key number encryption section transmits the encrypted second key number to the key number decryption section; and

(g) the key number decryption section supplies the first decryption key generation section with the decrypted second key number.

**8**. A digital broadcasting receiving device detachably connected to an information processing device for executing a program file including a loader, a main process that is at least partially encrypted, and a supervisory process that is at least partially encrypted and for supervising main processing according to the main process for receiving a broadcast signal of digital broadcasting, and to which the main process that is at least partially encrypted and the supervisory process that is at least partially encrypted are transmitted from the information processing device provided with a storage section on which the loader is developed in a executable condition, said digital broadcasting receiving device comprising:

a receiver for receiving the broadcast signal of the digital broadcasting to generate content data,

a decryption key storage section for storing a decryption key,

a process decryption section for decrypting the main process that is at least partially encrypted and the supervisory process that is at least partially encrypted transmitted from the information processing device using the decryption key stored in the decryption key storage section,

a protective data adding section for adding protective data to the main process decrypted by the process decryption section, and

a first protective data storage section for storing the protective data.

**9**. The digital broadcasting receiving device of claim **8**, wherein:

(a) the protective data adding section issues a secret code and adds the secret code to the main process decrypted by the process decryption section as the protective data; and

(b) the first protective data storage section stores the secret code issued by the protective data adding section.

**10**. The digital broadcasting receiving device of claim **9**, wherein:

(a) the protective data adding section calculates a unique value generated in accordance with a program sentence of the main process added with the secret code, and adds the unique value to the main process as the protective data; and

(b) the first protective data storage section stores the unique value of the main process.

* * * * *