US007717725B2

(12) **United States Patent**
Montena

(10) **Patent No.: US 7,717,725 B2**
(45) **Date of Patent: May 18, 2010**

(54) **SEALING ASSEMBLY FOR A CABLE CONNECTING ASSEMBLY AND METHOD OF JOINING CABLE CONNECTORS**

(75) Inventor: **Noah Montena**, Syracuse, NY (US)

(73) Assignee: **John Mezzalingua Associates, Inc.**, East Syracuse, NY (US)

(*) Notice: Subject to any disclaimer, the term of this patent is extended or adjusted under 35 U.S.C. 154(b) by 64 days.

(21) Appl. No.: **12/011,165**

(22) Filed: **Jan. 24, 2008**

(65) **Prior Publication Data**

US 2009/0191752 A1 Jul. 30, 2009

(51) **Int. Cl.**
H01R 13/52 (2006.01)

(52) **U.S. Cl.** **439/277**; 439/322

(58) **Field of Classification Search** 439/322, 439/584, 587, 595, 594, 489, 271, 320, 277
See application file for complete search history.

(56) **References Cited**

U.S. PATENT DOCUMENTS

4,601,497	A *	7/1986	Bartholomew	285/319
4,902,246	A	2/1990	Samchisen	
5,011,432	A	4/1991	Sucht et al.	
5,295,864	A	3/1994	Birch et al.	
5,340,332	A	8/1994	Nakajima et al.	
5,470,257	A	11/1995	Szegda	
5,571,028	A	11/1996	Szegda	
5,586,910	A	12/1996	Del Negro et al.	
5,997,350	A	12/1999	Burris et al.	
6,019,636	A	2/2000	Langham	
6,034,325	A	3/2000	Nattel et al.	
6,089,912	A	7/2000	Tallis et al.	
6,679,724	B2 *	1/2004	Hillman et al.	439/489
D504,113	S	4/2005	Montena	
7,097,500	B2	8/2006	Montena	
7,128,603	B2	10/2006	Burris et al.	
7,207,820	B1	4/2007	Montena	
7,264,503	B2	9/2007	Montena	
7,458,851	B2 *	12/2008	Montena	439/584
2004/0082218	A1 *	4/2004	Stirling	439/587

* cited by examiner

Primary Examiner—Neil Abrams
Assistant Examiner—Phuong Nguyen
(74) *Attorney, Agent, or Firm*—Wood, Phillips, Katz, Clark & Mortimer

(57) **ABSTRACT**

A sealing assembly operatively attached to a coaxial cable connector that is attached to an RF port. The sealing assembly has a sealing subassembly, that is changeable between a pre-assembled state and a sealing state, and at least one actuator component. The sealing subassembly has a sealing portion. Advancement of the actuator component changes the sealing subassembly from the pre-assembled state into the sealing state and thereby causes the sealing portion to compress radially against the RF port.

23 Claims, 15 Drawing Sheets

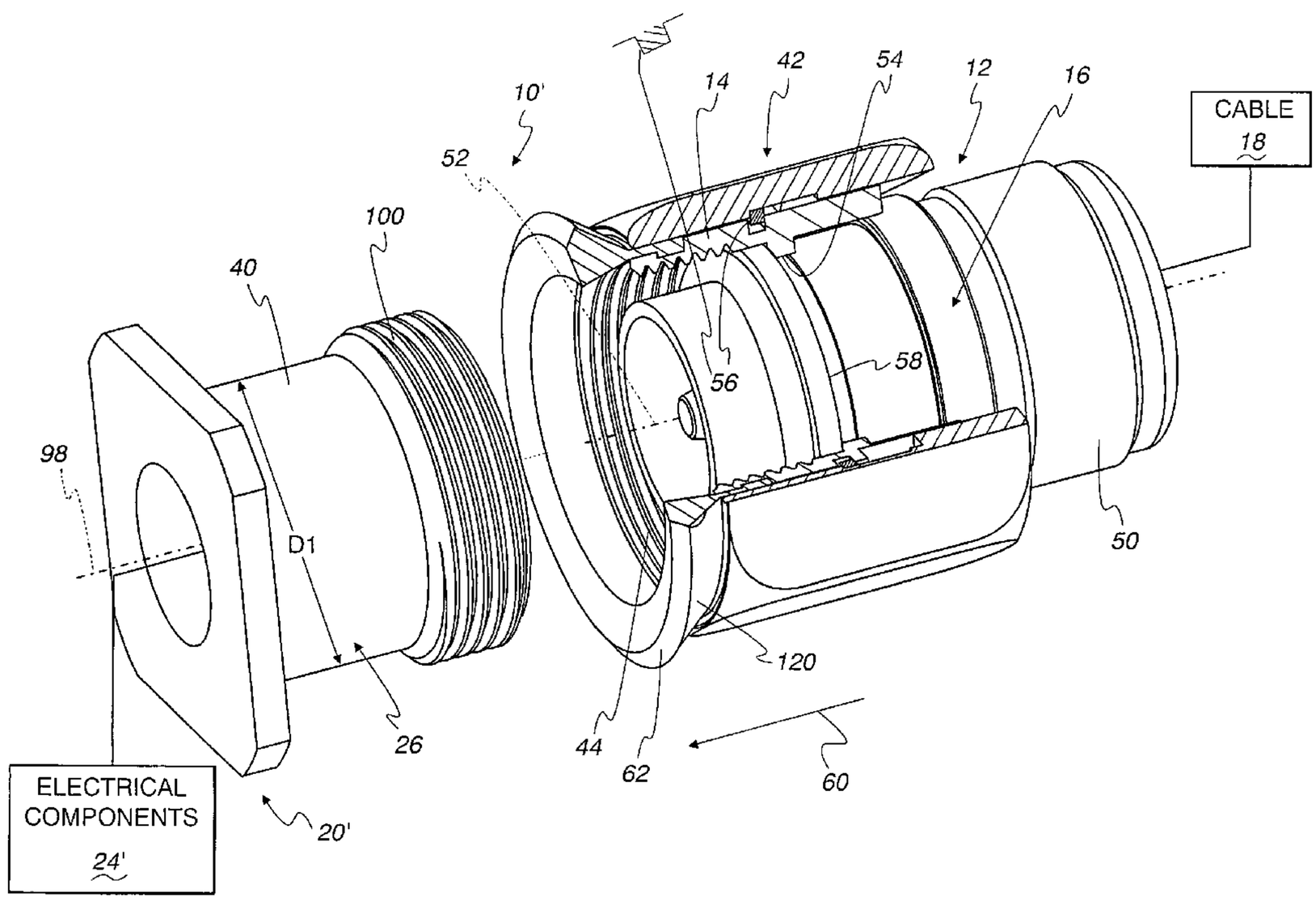

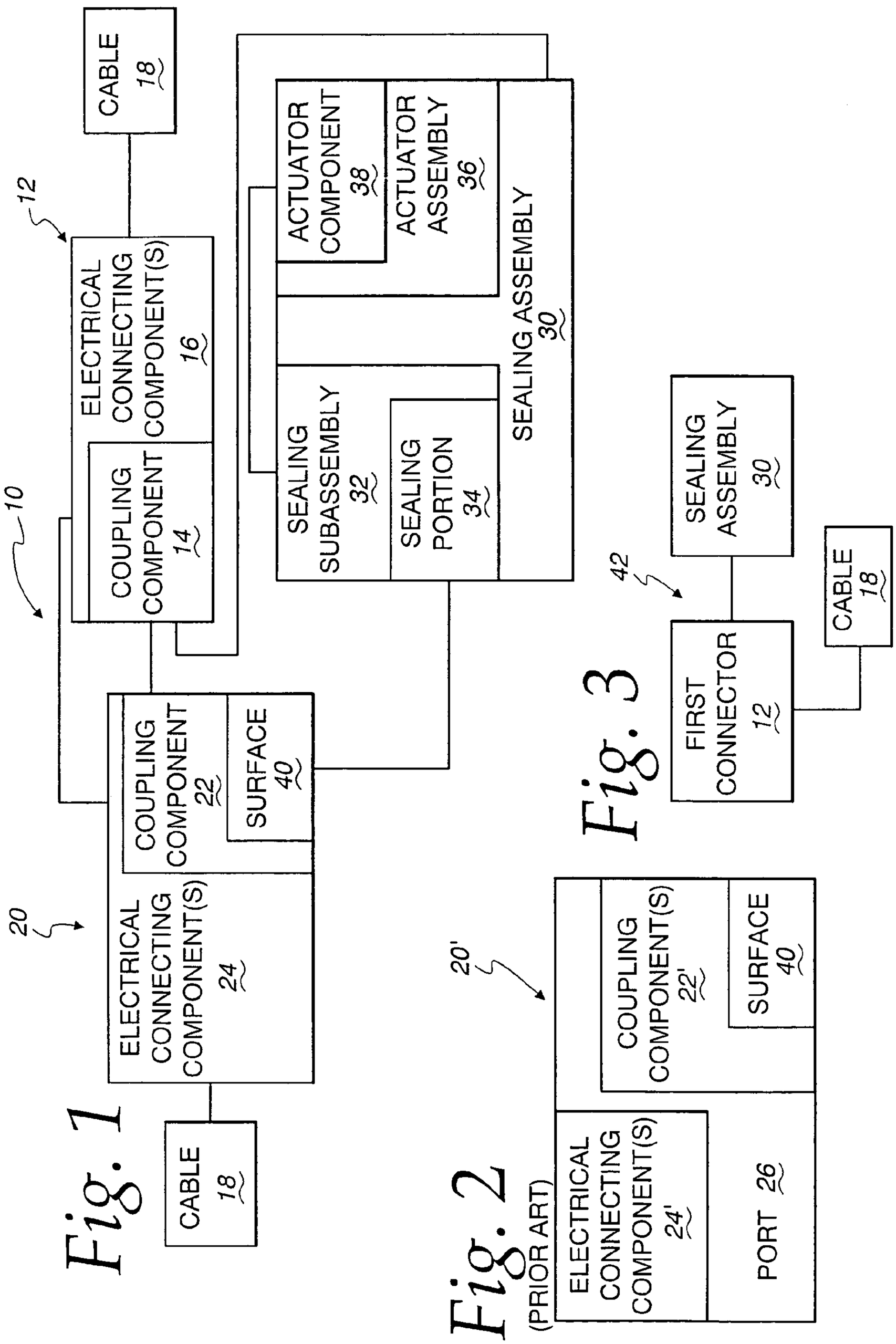

Fig. 1

Fig. 2
(PRIOR ART)

Fig. 3

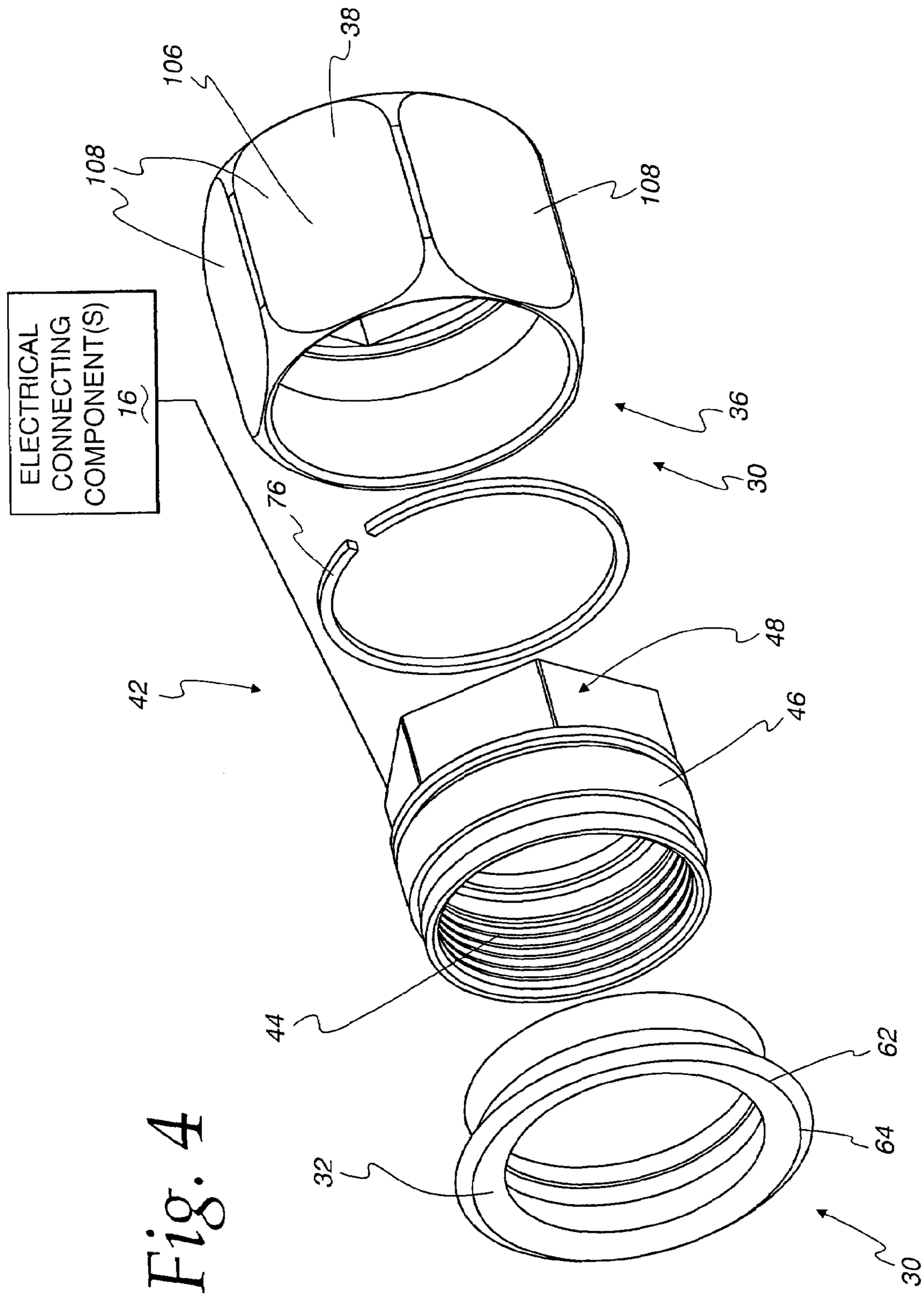
ELECTRICAL CONNECTING COMPONENT(S) 16
108
106
38
108
36
30
76
48
42
46
44
62
64
32
30

Fig. 4

Fig. 5

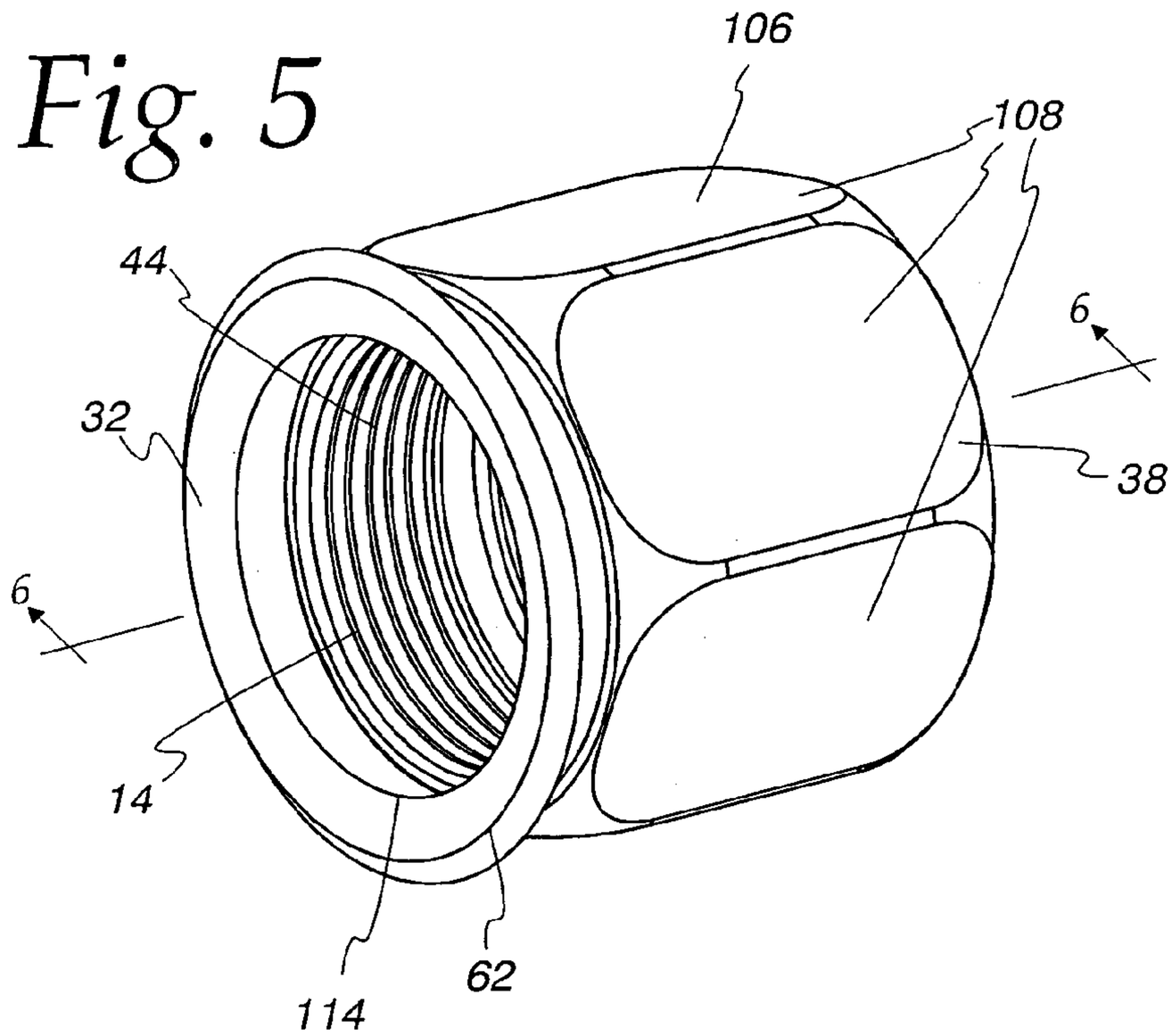
106
108
44
6
32
38
6
14
114
62

Fig. 6

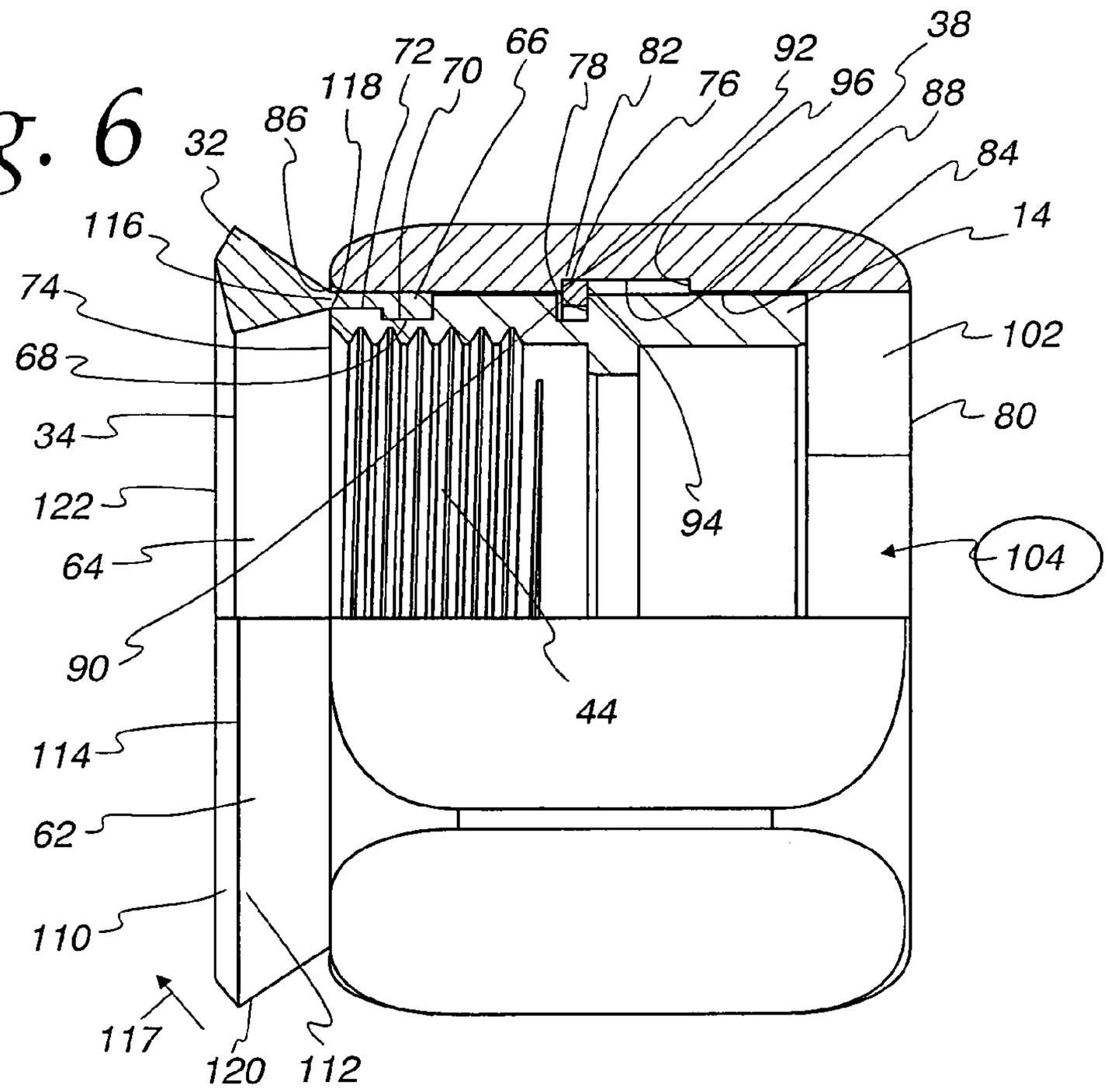
38
72
66
118
70
78
82
92
96
88
86
32
84
116
14
74
102
68
80
34
94
122
64
104
90
44
114
62
110
117
120
112

Fig. 7

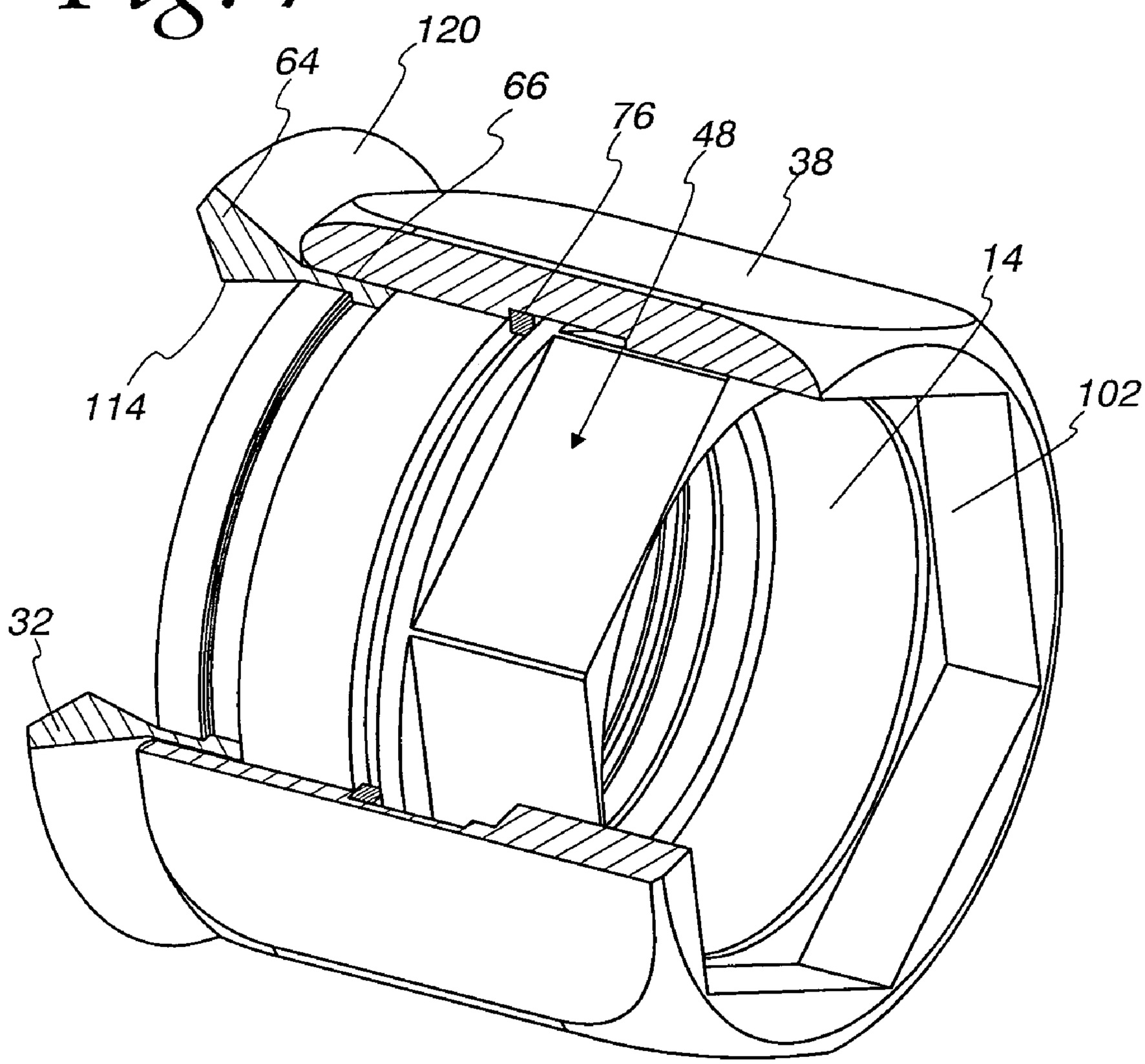

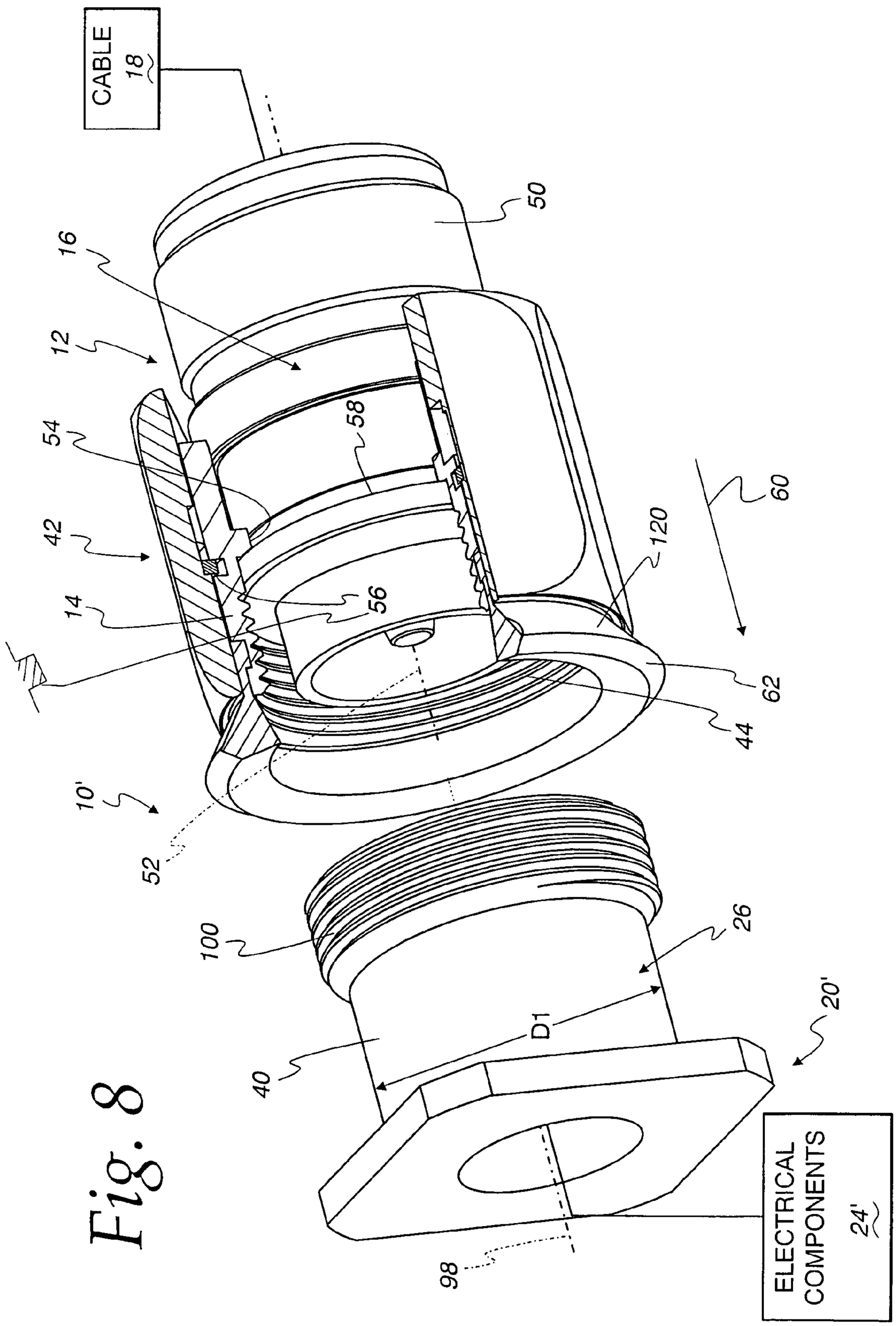
CABLE
18
50
16
12
54
58
42
14
56
120
60
62
44
10'
52
100
26
D1
40
20'
ELECTRICAL
COMPONENTS
24'
98

Fig. 8

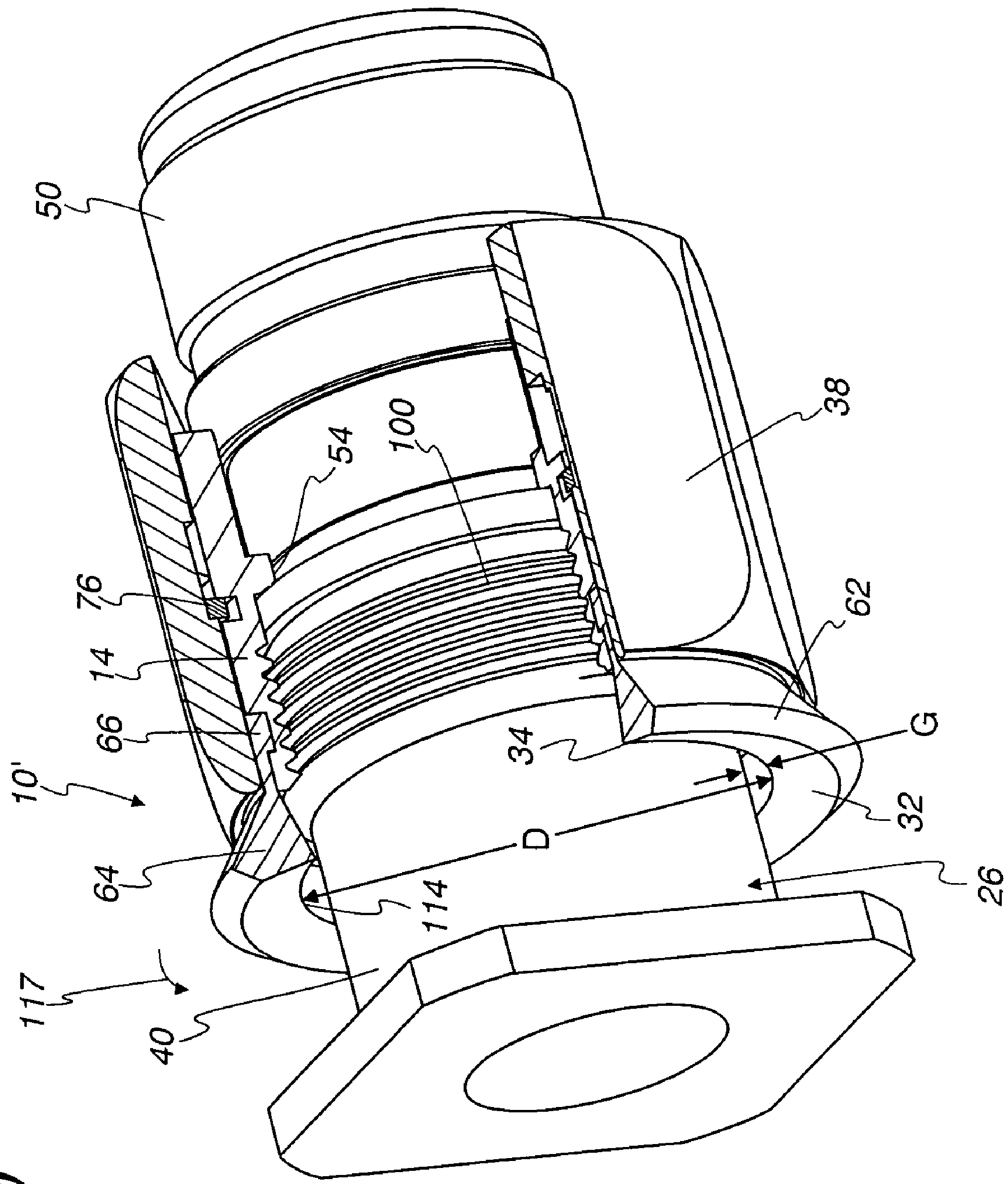

Fig. 9

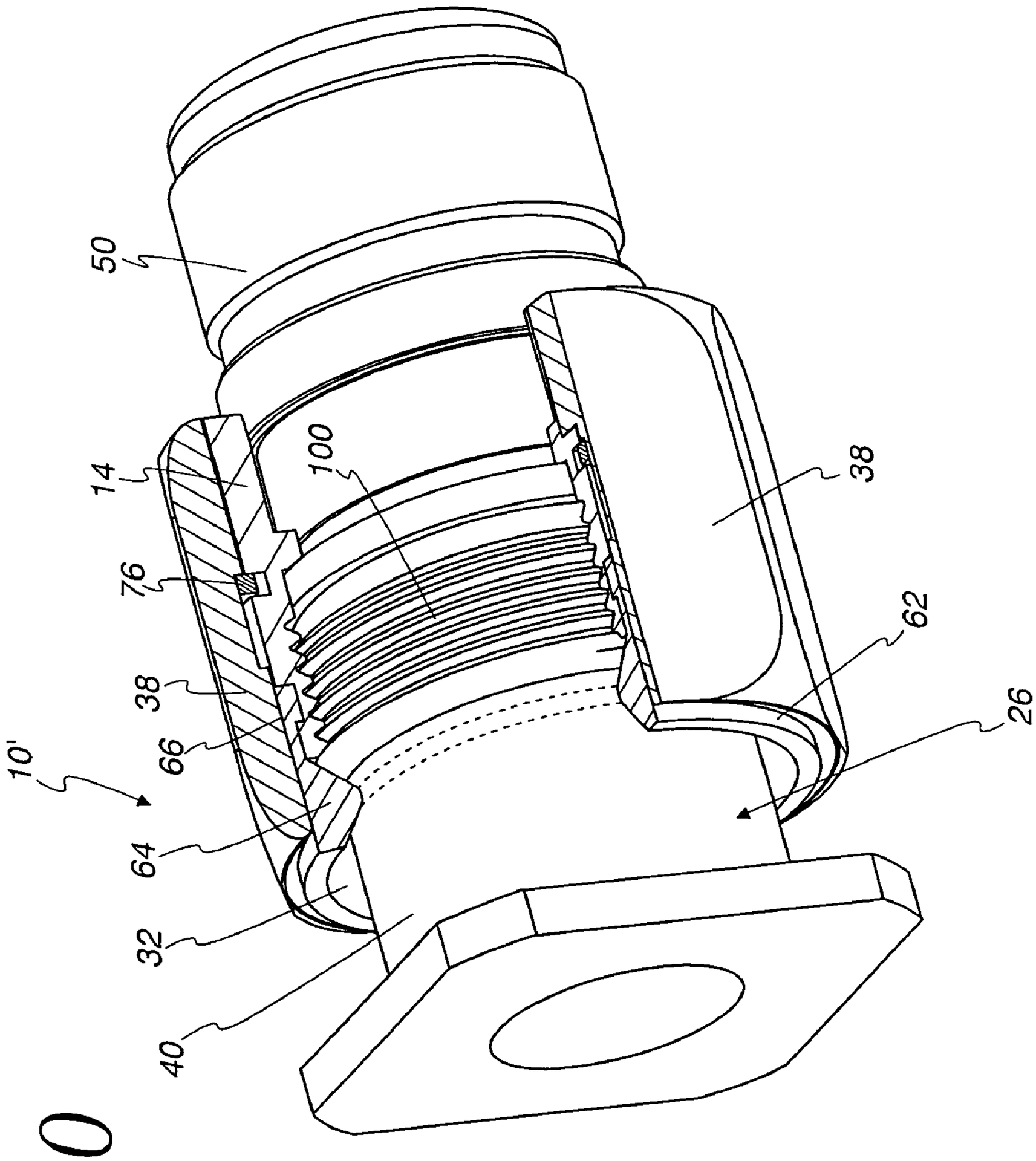

Fig. 10

Fig. 11

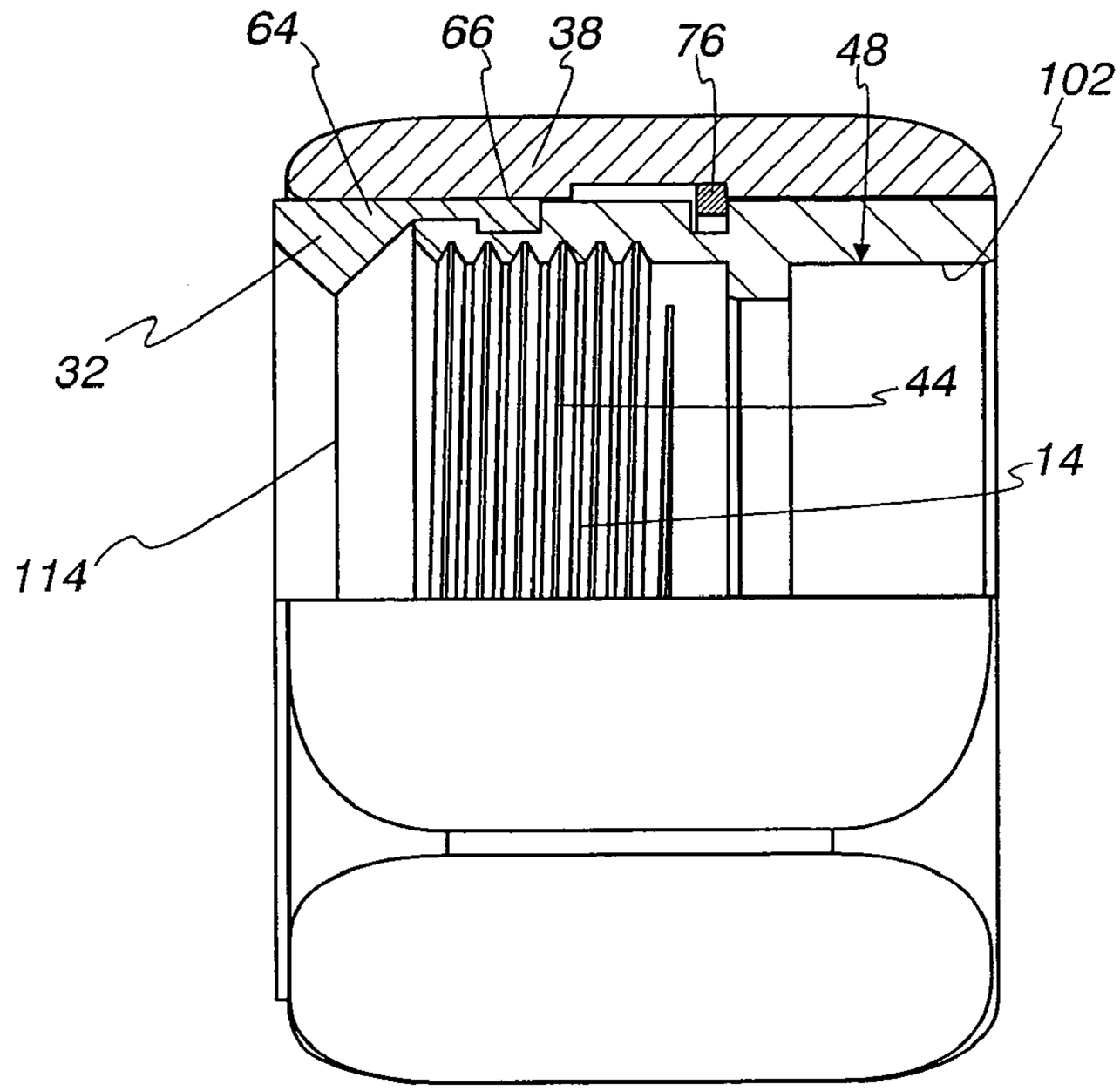

Fig. 12

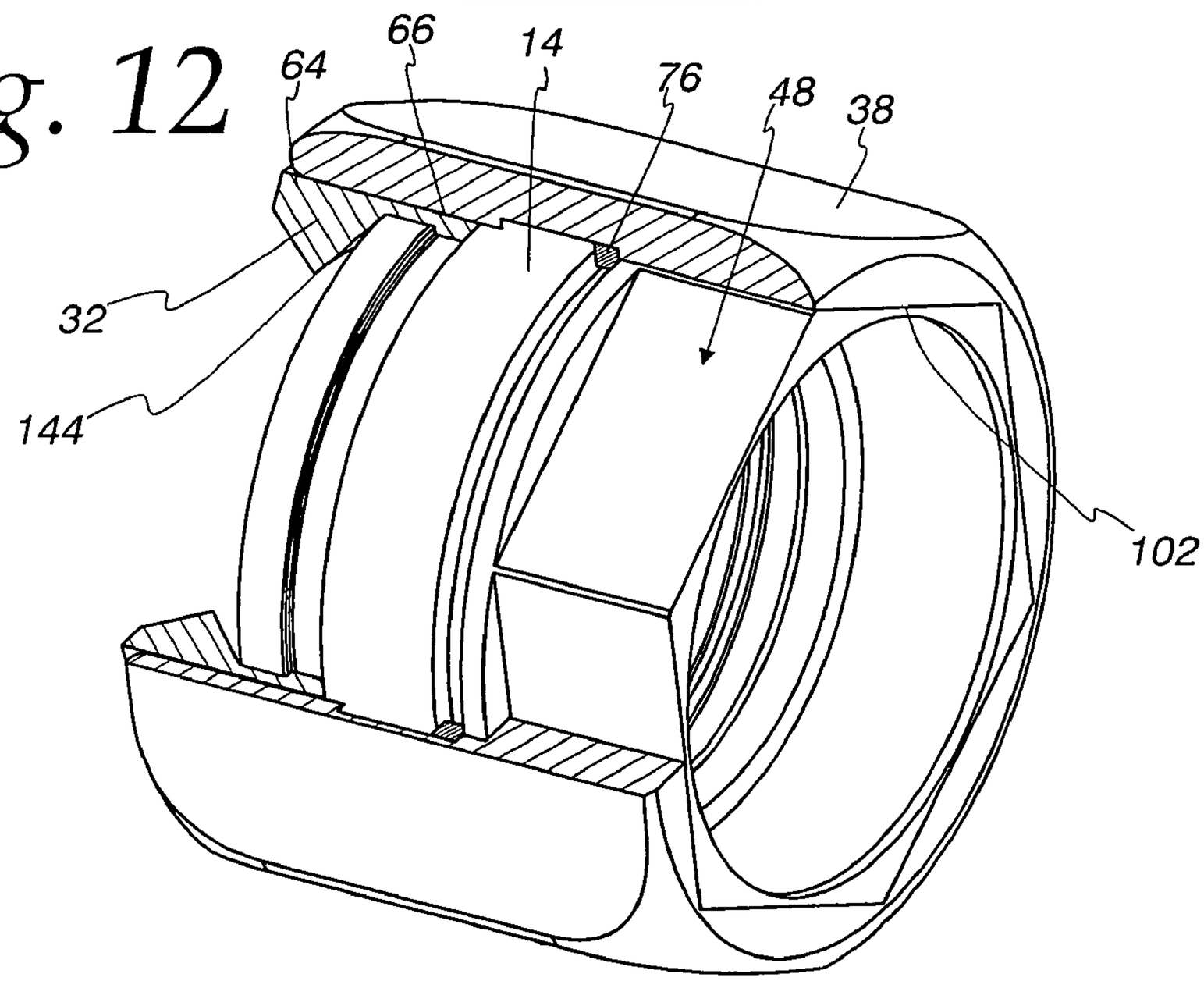

Fig. 13

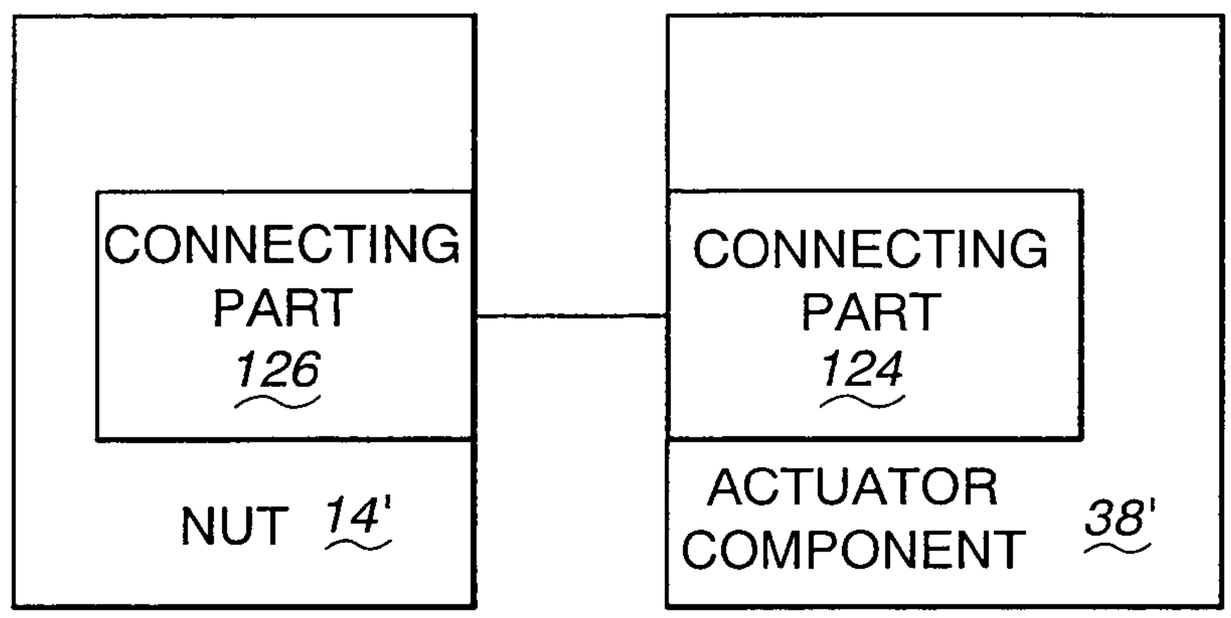
CONNECTING PART 126
NUT 14'
CONNECTING PART 124
ACTUATOR COMPONENT 38'

Fig.14

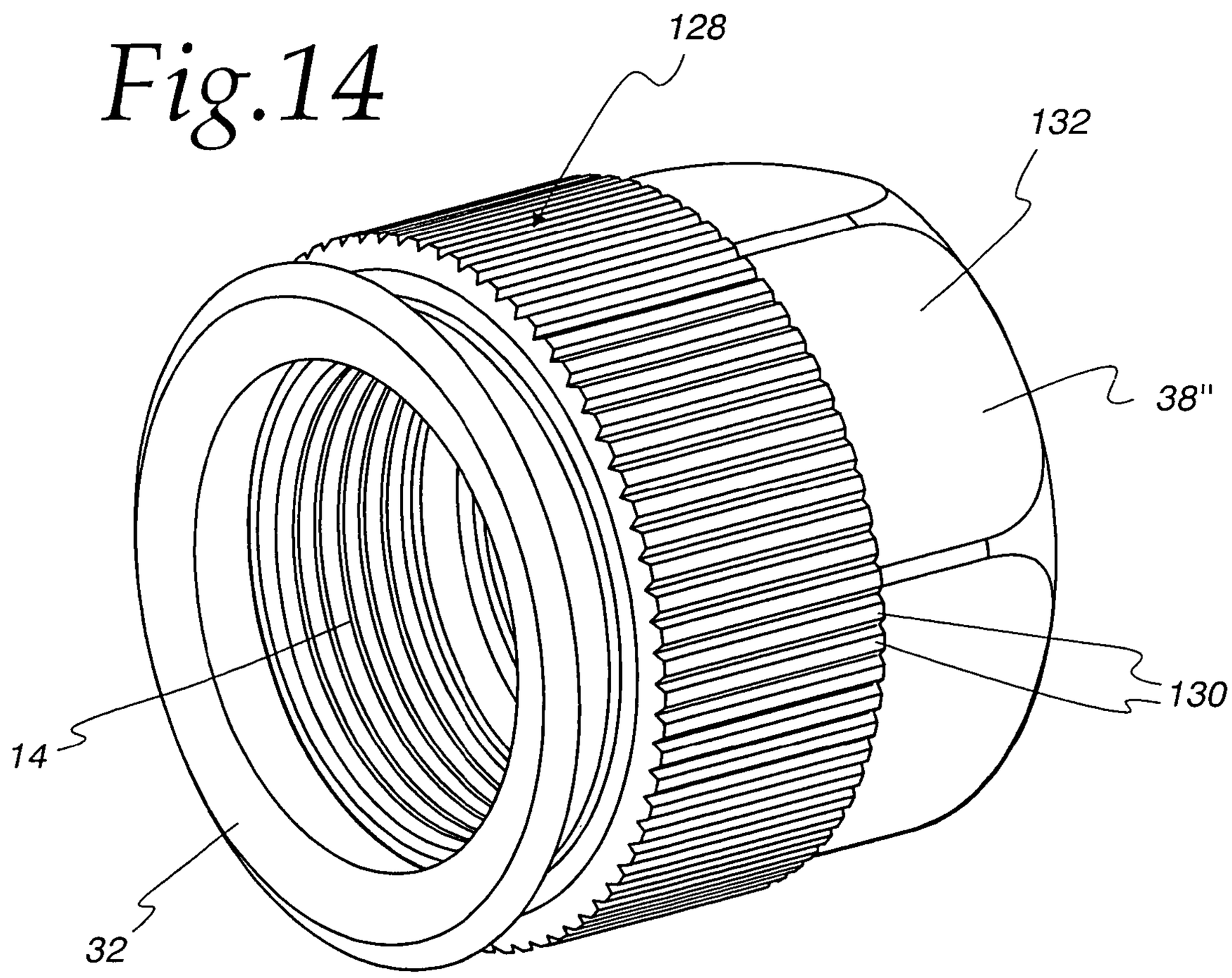
128
132
38''
130
14
32

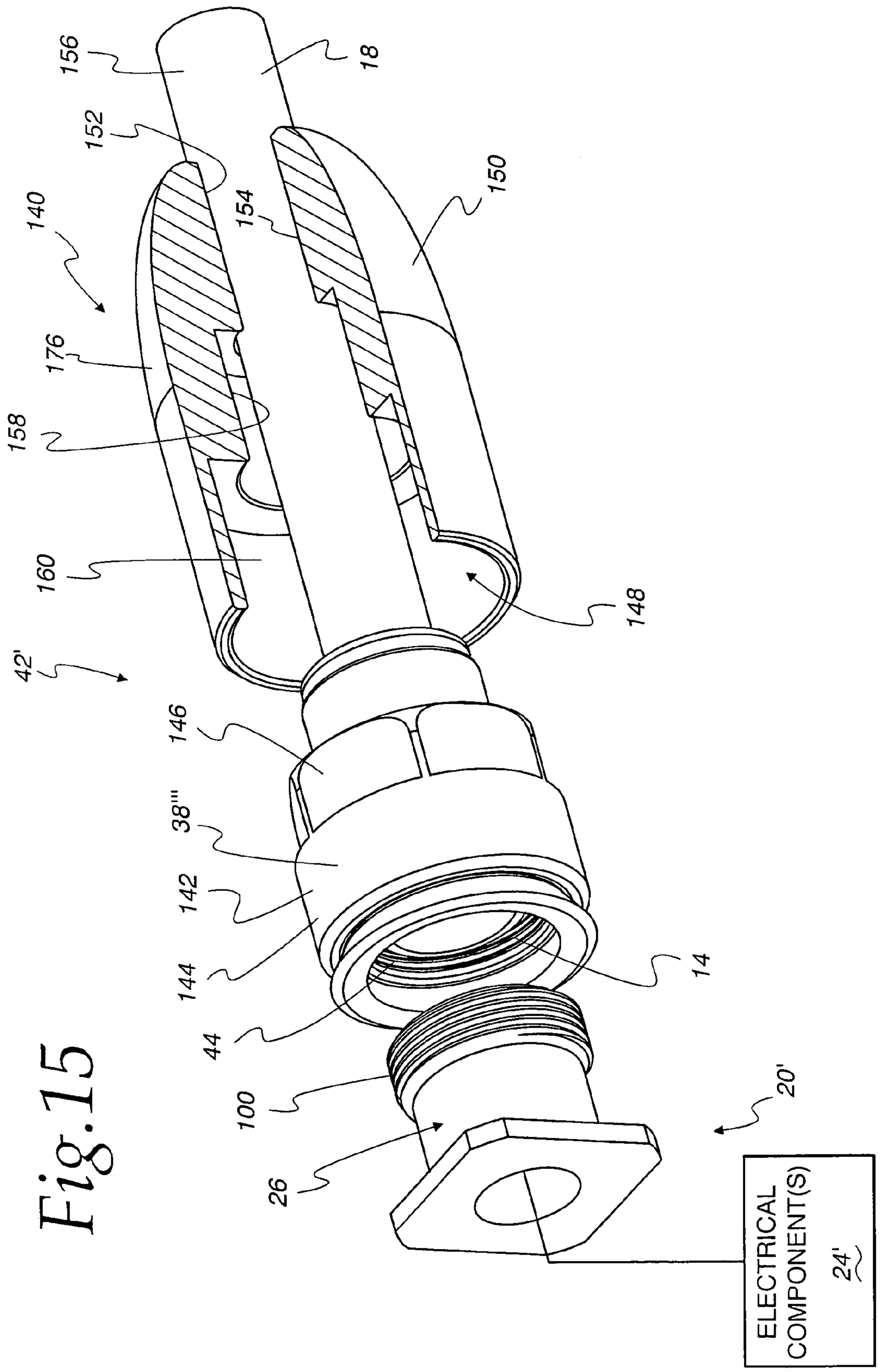
156
18
152
150
140
154
176
158
160
148
42'
146
38'''
142
144
14
44
100
20'
26
ELECTRICAL
COMPONENT(S)
24'

Fig.15

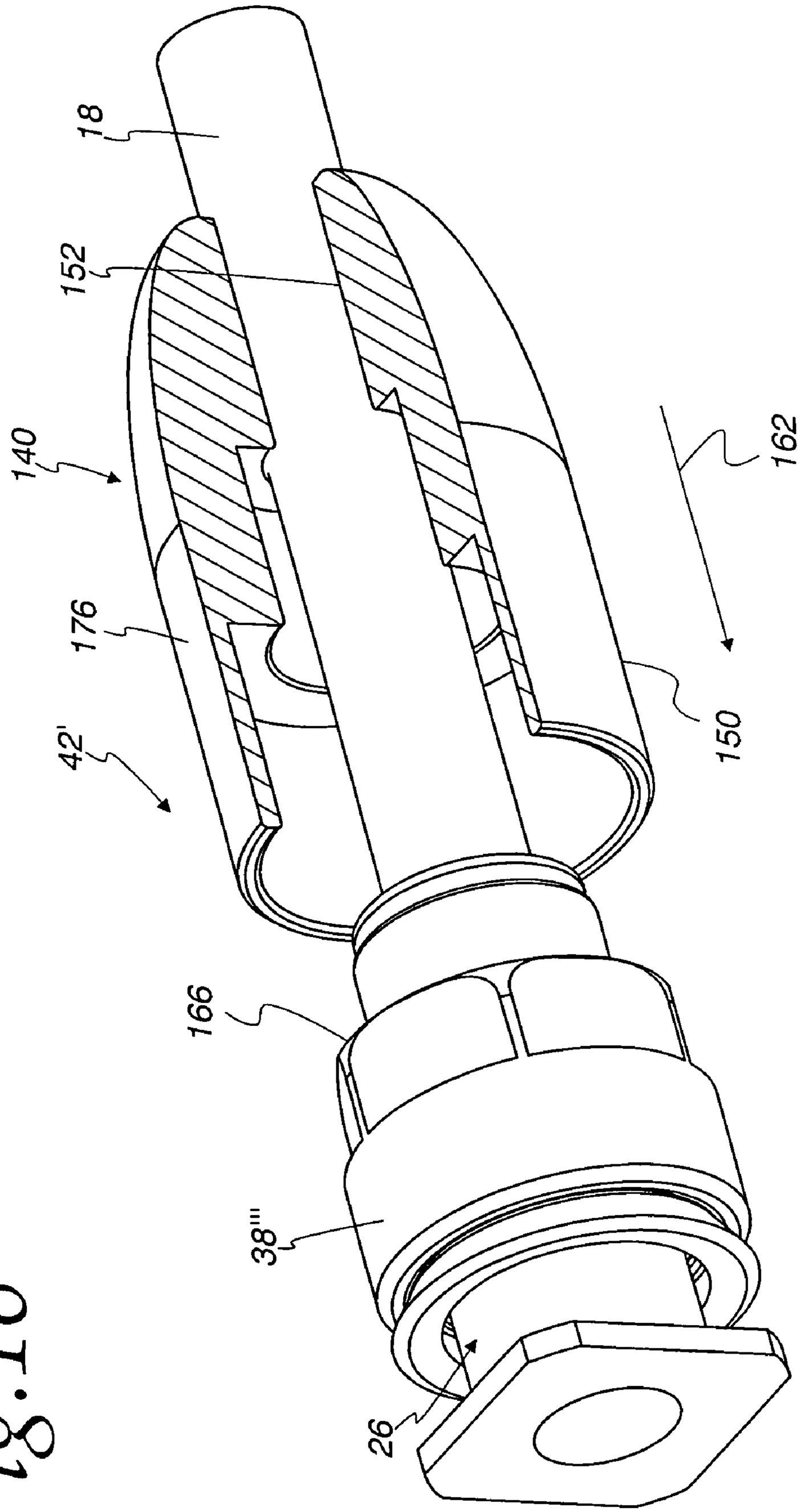

Fig.16

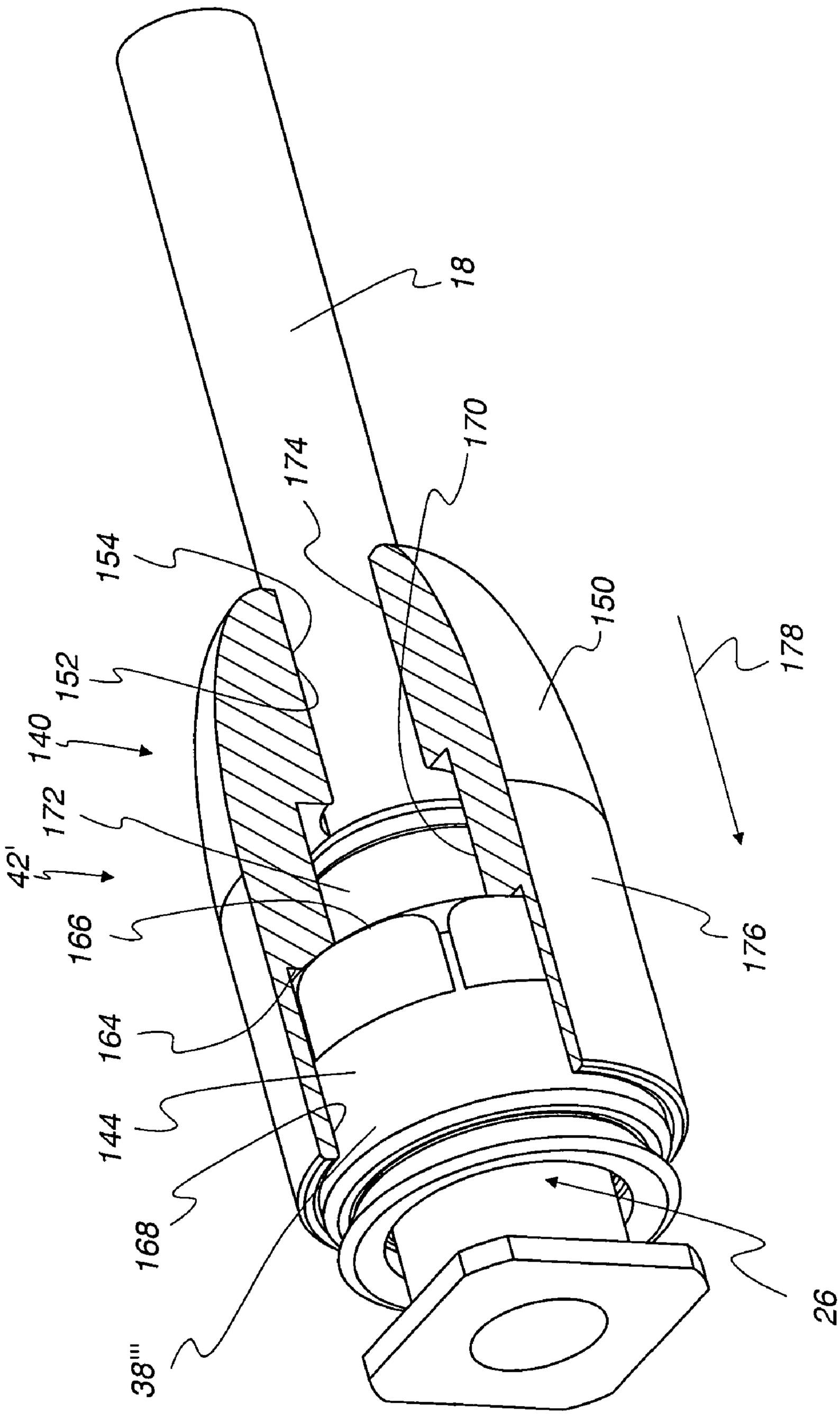

Fig. 17

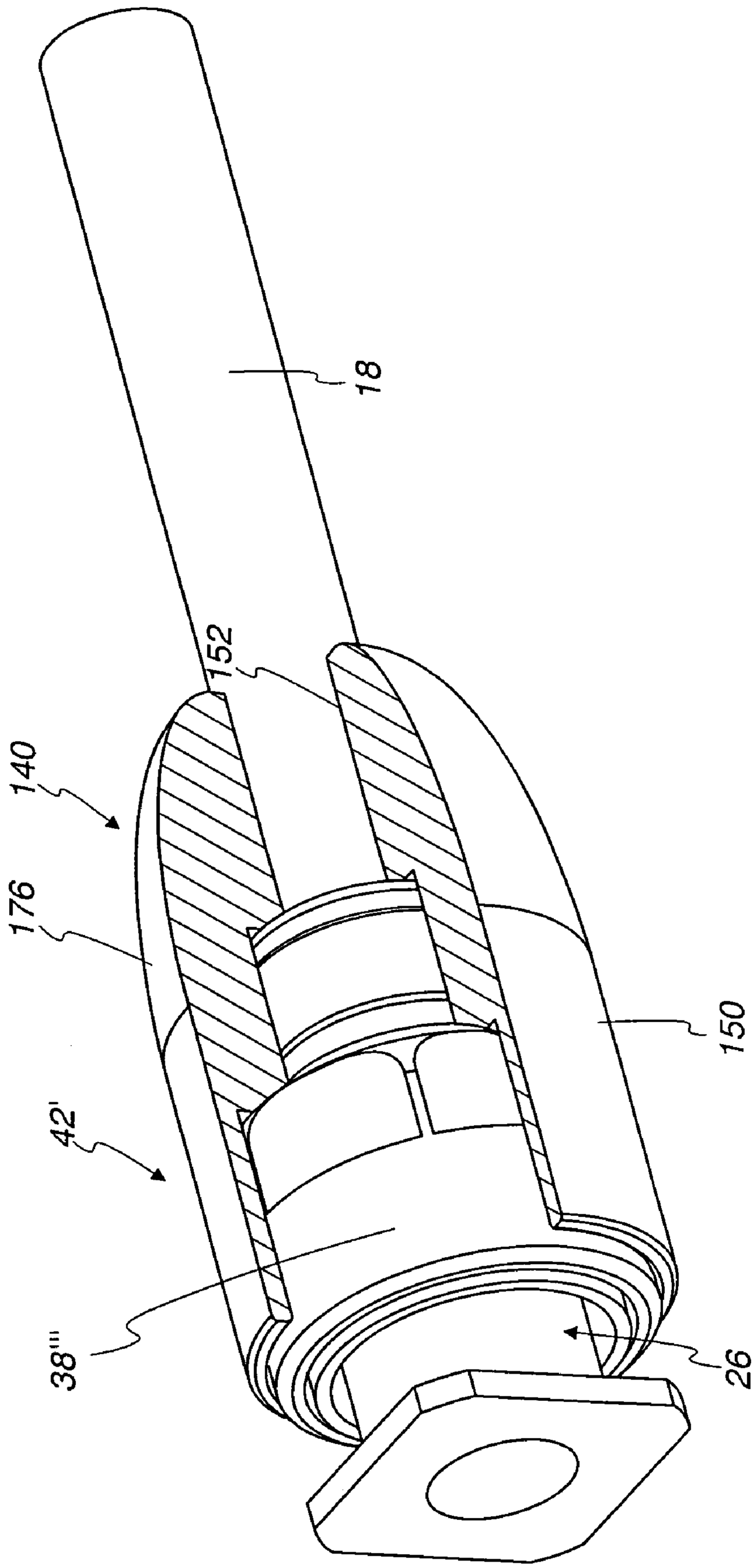

Fig. 18

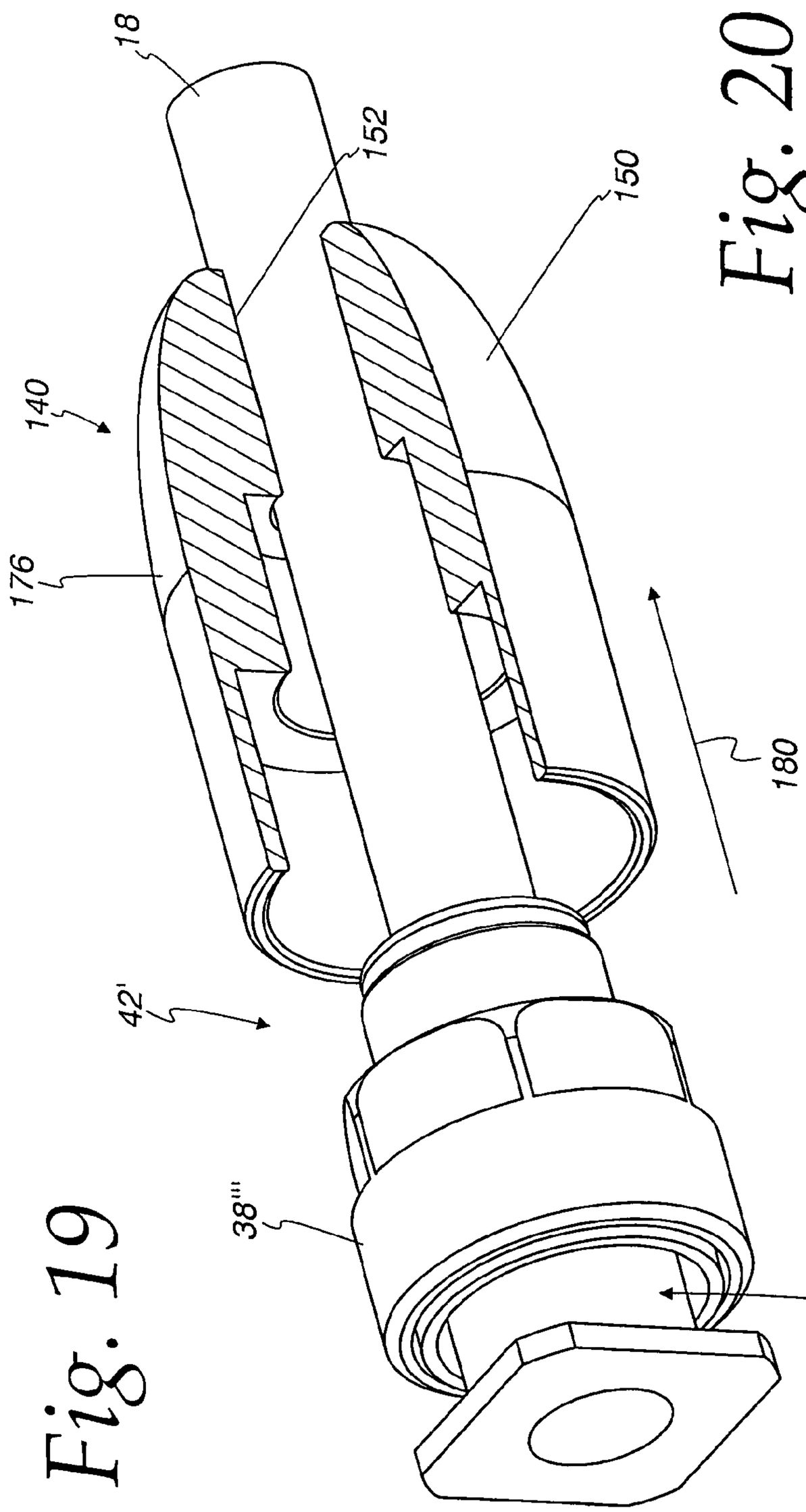
18
152
150
140
176
180
42'
38'''
26

Fig. 19

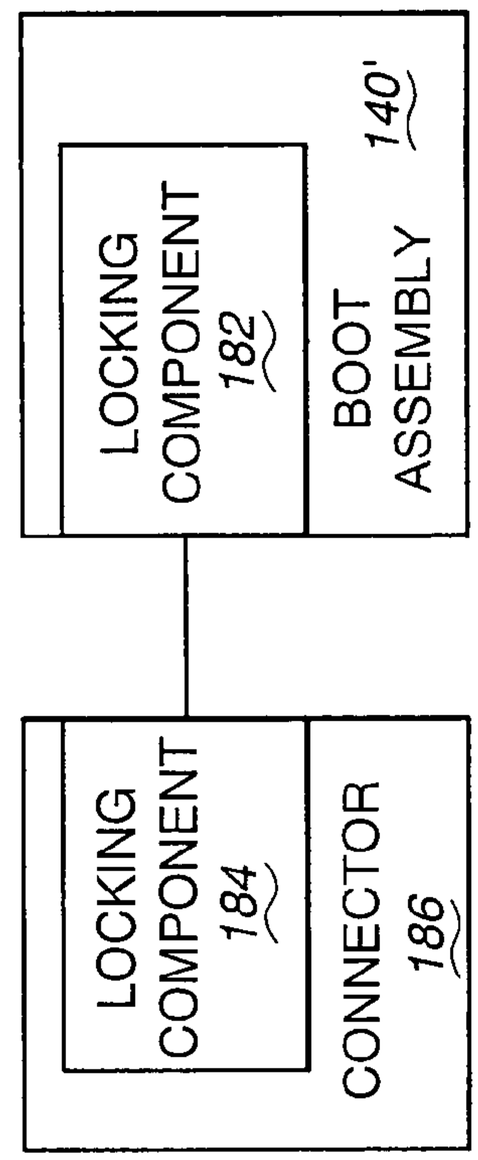
LOCKING COMPONENT 182
BOOT ASSEMBLY 140'
LOCKING COMPONENT 184
CONNECTOR 186

Fig. 20

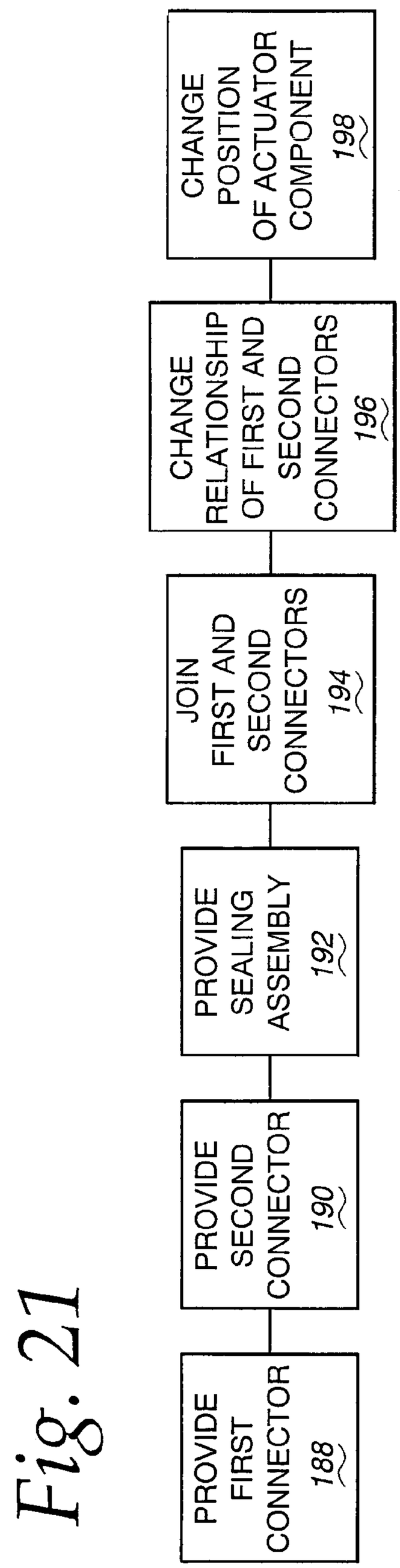
PROVIDE FIRST CONNECTOR 188
PROVIDE SECOND CONNECTOR 190
PROVIDE SEALING ASSEMBLY 192
JOIN FIRST AND SECOND CONNECTORS 194
CHANGE RELATIONSHIP OF FIRST AND SECOND CONNECTORS 196
CHANGE POSITION OF ACTUATOR COMPONENT 198

Fig. 21

SEALING ASSEMBLY FOR A CABLE CONNECTING ASSEMBLY AND METHOD OF JOINING CABLE CONNECTORS

BACKGROUND OF THE INVENTION

1. Field of the Invention

This invention relates to connecting assemblies for cable, such as coaxial cable and, more particularly, to a sealing assembly for the connecting assemblies to avoid ingress of moisture and foreign matter between connectors on the connecting assemblies. The invention is also directed to a method of joining separate connectors.

2. Background Art

Cable connectors are used in many different industries and for a multitude of different applications. Coaxial cable is used extensively in the communications industry. Coaxial cable ends are commonly required to be connected to other lengths of cables, or at ports or other connecting locations, to establish electrical continuity at the connecting locations.

It is important in most applications that there be no migration of moisture between components at a connecting location as might compromise, or cause a failed, signal. At the same time, this migration of moisture may cause a progressive degradation of the components which may affect signal quality and/or inhibit, or eventually prohibit, the separation of the connectors, when this becomes necessary.

The cable industry has long been aware of the importance of sealing connections at locations that are prone to admitting moisture. A multitude of different sealing arrangements have been developed by those in the cable industry and other industries to avoid the above problems. Many such sealing arrangements, while potentially effective, are compromised by reason of improper installation, or their omission, by an installer.

Cable installation is particularly competitive, given the number of entities vying for business. Consequently, margins are generally low. Thus sealing assemblies are generally designed so that they will be cost effective both from a manufacturing standpoint and from the standpoint of installation.

Reliability of the sealing assemblies, however, is of the utmost importance since return visits necessitated by ineffective sealing may have a significant, if not devastating, financial impact on an installer.

Under normal conditions, if a sealing assembly is difficult or time consuming to install, shortcuts might be taken that result in an ineffectively sealed installation. In an extreme case, the sealing assembly may be altogether left off in the interest of convenience and time savings. This is particularly true in harsh, outdoor conditions in which installers may be required to perform. Aside from the ongoing time pressures, and high volume expectations, installers may be faced with the difficulty of effecting installations using gloves.

In spite of there being a multitude of different sealing assemblies currently in existence, it is still common to see shortcuts taken by installers that bypass specified procedures.

The above problems are aggravated by the variations in connector component constructions that do not allow standardization of sealing assemblies. As an example, the wireless industry has devised a number of equipment ports for outdoor use which do not provide for conventional, reliable seals, such as those using O-rings, and the like. There is generally little standardization of components other than those directly related to signal transmission properties and secure contact.

Consequently, it is not uncommon to see make-shift sealing accomplished at such connections. For example, sealing tape is commonly wrapped copiously over outdoor connections. This process may be expensive in terms of material and labor costs and also is largely ineffective. Given that most failures of power equipment result from moisture ingress, this ineffective sealing accounts for compromised signals, and potentially failures that necessitate return visits and burdensome repair work.

Since it is not practical to closely supervise all installers, the industry continues to contend with the above problems. The industry continues to search however for a seal design that will not impede or lengthen the installation process and that will be consistently used and reliably seal critical connection locations.

SUMMARY OF THE INVENTION

One form of the invention is directed to a sealing assembly for a coaxial cable connector, the connector having at one end a threaded nut for removable attachment to an RF port. The sealing assembly has a sealing subassembly changeable between a pre-assembled state and a sealing state. The sealing subassembly has at one end an engagement portion and at its other end a sealing portion. The engagement portion is mounted to the nut. An actuator is mounted on an external surface of the nut. Axial advancement of the actuator changes the sealing subassembly from the pre-assembled state into the sealing state and thereby causes the sealing portion to compress radially inwardly around the RF port.

In one form, the sealing subassembly has a hinge at which the sealing subassembly can bend to cause a first part of the sealing subassembly, on which the sealing portion is defined, to move radially inwardly relative to a second part of the sealing subassembly, on which the engagement portion is defined, as the sealing subassembly is changed from the pre-assembled state into the sealing state.

In one form, there are cooperating connecting parts on the second part of the sealing subassembly and nut that allow the sealing subassembly and nut to be press fit, and maintained, together.

In one form, the actuator is moved axially along a central axis between first and second positions to change the sealing subassembly from the pre-assembled state into the sealing state. The actuator and nut are maintained together and are movable relative to each other axially to allow the actuator component to be changed between the first and second positions.

In one form, the nut and actuator are keyed to each other to limit relative movement between the nut and actuator around the central axis, thereby allowing the actuator to be turned around the central axis to thereby turn the nut around the central axis.

In one form, the actuator surrounds the first part of the sealing subassembly so that the first part of the sealing subassembly is captive between the actuator and a radially outwardly facing surface on the RF port.

In one form, the radially outwardly facing surface has a first diameter and the sealing portion has a second diameter that is greater than the first diameter with the sealing subassembly in the pre-assembled state. The sealing portion can be moved axially relative to the radially outwardly facing surface without any interference between the sealing portion and radially outwardly facing surface with the sealing subassembly in the pre-assembled state.

In one form, the actuator is moved axially between first and second positions to change the sealing subassembly from the pre-assembled state into the sealing state. The connecting assembly further has a boot assembly that is engagable with

the actuator and manipulable to thereby move the actuator from the first position into the second position.

In one form, the boot assembly is configured to sealingly receive a part of the actuator and seal directly against and around a cable connected to the connector.

In one form, the sealing portion has a surface bounded by a radially outwardly opening "V" with the sealing subassembly viewed in cross section.

In one form, the sealing portion is provided in combination with a coaxial cable length operatively connected to the connector.

In one form, the nut and actuator are guided one against the other as the actuator is moved relative to the nut between the first and second positions and there are one of: a) cooperating threads on the nut and actuator that allow the nut and actuator to be turned relative to each other around the central axis to effect relative axial movement therebetween; and b) cooperating surfaces on the nut and actuator through which the nut and actuator can be guided slidingly against each other in a straight line generally parallel to the central axis.

In another form, a sealing assembly is provided for a connecting assembly having a first connector that can be electrically connected to a first length of coaxial cable and having a central axis. The first connector includes an internally threaded nut that can be engaged with external threads on a second connector to establish electrical connection between a first length of coaxial cable electrically connected to the first connector and one of: a) a second length of coaxial cable; or b) a port defined by the second connector. The sealing assembly has a sealing subassembly that is changeable between pre-assembled and sealing states and defines a sealing portion. The sealing assembly further includes an actuator assembly with an actuator component that is movable guidingly axially relative to the first nut between first and second positions. The actuator component, as an incident of moving between the first and second positions, changes the sealing subassembly from the pre-assembled state into the sealing state by bending a part of the sealing subassembly, and thereby changing an effective diameter of the sealing portion, that is engageable with a radially outwardly facing surface on a second connector to which the first connector is joined.

In one form, the sealing assembly includes a hinge at which the sealing subassembly bends to cause a first part of the sealing subassembly, on which the sealing portion is defined, to move radially inwardly relative to a second part of the sealing subassembly, as the sealing subassembly is changed from the pre-assembled state into the sealing state.

In one form, the nut and actuator component are keyed to each other to limit relative movement between the nut and actuator component around the central axis, thereby allowing the actuator component to be turned around the central axis and to thereby turn the nut around the central axis to facilitate threaded engagement of the nut with a second connector.

In one form, there are cooperating connecting parts on the sealing subassembly and nut that allow the sealing subassembly and nut to be press fit, and maintained, together.

In one form, the sealing portion has a surface bounded by a radially outwardly opening "V" with the sealing subassembly viewed in cross section.

In one form, the nut and actuator component are guided one against the other as the actuator component is moved relative to the nut between the first and second positions and there are one of: a) cooperating threads on the nut and actuator component that allow the nut and actuator components to be turned relative to each other around the central axis to effect relative axial movement therebetween; and b) cooperating surfaces on the nut and actuator component through which the nut and actuator component can be guided slidingly against each other in a straight line generally parallel to the central axis.

In one form, the connecting assembly further includes a boot assembly that is engageable with the actuator component and manipulable to thereby move the actuator component relative to the nut from the first position into the second position.

In one form, the boot assembly is configured to sealingly receive a part of the actuator component and seal directly against and around a first length of coaxial cable electrically connected to the first connector.

In another form, the invention is directed to a connecting assembly for cable. The connecting assembly has a first connector that can be electrically connected to a first length of coaxial cable and has a central axis. The first connector has an internally threaded nut that can be engaged with external threads on a second connector to establish electrical connection between a first length of coaxial cable electrically connected to the first connector and one of: a) a second length of coaxial cable; or b) a port defined by the second connector. Reconfigurable structure seals around a radially outwardly facing surface on a second connector to which the first connector is joined.

In one form, the reconfigurable structure has a sealing subassembly having a sealing portion. Structure is provided, cooperating between the nut and a part of the sealing subassembly, for press fitting and thereby maintaining the first connector and sealing subassembly together with the nut surrounding at least a part of the sealing subassembly.

In another form, the invention is directed to a method of joining first and second connectors. The method includes the steps of: providing a first connector with a first cable length operatively connected thereto; providing a second connector with a central axis and a radially outwardly facing surface; providing a sealing assembly; joining the first and second connectors together into a preliminary joined state; changing the relationship of the first and second connectors to a joined operative state wherein the first and second connectors are secured together; and changing the actuator component from a first position into a second position and thereby causing a part of the sealing subassembly to bend to thereby cause a sealing portion on the part of the sealing subassembly to be reduced from a first effective diameter to a second effective diameter, smaller than the first effective diameter, thereby to bring the sealing portion from a radially spaced relationship into sealing engagement with the radially outwardly facing surface.

In one form, the second connector has an effective outer diameter along an axial extent over which the sealing portion passes as the first and second connectors are changed from a separated state into the joined operative state and with the actuator in the first position the first effective diameter of the sealing portion is greater than the effective outer diameter of the second connector over the entire axial extent.

In one form, the actuator component is changed from the first position into the second position after the first and second connectors are changed into the joined operative state.

BRIEF DESCRIPTION OF THE DRAWINGS

FIG. **1** is a schematic representation of one form of connecting assembly, including first and second connectors for mechanically and electrically connecting separate cable lengths, and incorporating a sealing assembly, according to the present invention;

FIG. **2** is a schematic representation of a conventional connector, defining a port, to which a connecting assembly, consisting of one of the connectors and sealing assembly in FIG. **1**, can be joined;

FIG. **3** is a schematic representation of a connecting assembly, of the type that can be joined to the connector in FIG. **2**, including one connector together with the inventive sealing assembly, that is joined to a cable length;

FIG. **4** is an exploded, perspective view of one exemplary form of the connecting assembly in FIG. **3**, with the sealing assembly consisting of a sealing subassembly and an actuator/actuator component that cooperate with a coupling component in the form of a nut;

FIG. **5** is an enlarged, perspective view of the components in FIG. **4** in an assembled state and with the sealing subassembly in a pre-assembled state;

FIG. **6** is an enlarged, partial, cross-sectional view of the assembled components of FIG. **5** taken along line **6-6** therein;

FIG. **7** is a view as in FIG. **6** from a different perspective;

FIG. **8** is an enlarged, partially broken away, perspective view of the connecting assembly in FIG. **4** with a connector thereon and a separate connector defining a cooperating port, and with the connectors in a separated state and with the sealing subassembly in the pre-assembled state;

FIG. **9** is a view as in FIG. **8** wherein the connectors are threadably joined and the sealing subassembly is in the pre-assembled state;

FIG. **10** is a view as in FIG. **9** wherein the actuator component has been repositioned to change the sealing subassembly into a sealing state;

FIG. **11** is a view as in FIG. **6** with the sealing subassembly in the sealing state;

FIG. **12** is a view as in FIG. **7** with the sealing subassembly in the sealing state;

FIG. **13** is a schematic representation of a sealing assembly, according to the invention, wherein an actuator/actuator component and nut are joined through cooperating connecting parts;

FIG. **14** is a view as in FIG. **5** with corresponding components in the same state and with a modified form of actuator/actuator component including a knurled portion to facilitate gripping;

FIG. **15** is an exploded, partially broken away, perspective view of a connecting assembly, according to the present invention, including a separate connecting assembly, as in FIG. **8**, with a modified form of actuator/actuator component to accommodate a boot assembly, with the boot assembly shown in a pre-assembly position;

FIG. **16** is a view as in FIG. **15** with a connector on the connecting assembly and a connector defining a port threadably connected and with the boot assembly remaining in the FIG. **15** position and the sealing subassembly in the pre-assembled state;

FIG. **17** is a view as in FIG. **16** wherein the boot assembly has been moved axially to an assembly position against the actuator/actuator component;

FIG. **18** is a view as in FIG. **17** wherein the boot assembly has been axially moved to reposition the actuator/actuator component to thereby change the sealing assembly from its pre-assembled state into its sealing state;

FIG. **19** is a view as in FIG. **18** wherein the boot assembly has been moved axially away from the FIG. **18** position to expose the connected components;

FIG. **20** is a schematic representation of the connector with which the boot assembly is associated, and with optional cooperating locking components to maintain the boot assembly in the FIG. **18** position; and

FIG. **21** is a flow diagram representation of a method for joining first and second connectors, according to the present invention.

DETAILED DESCRIPTION OF THE DRAWINGS

In one form of the invention, a connecting assembly is provided for cable, as shown at **10** in FIG. **1**. The connecting assembly **10** consists of a first connector **12**, made up of a coupling component **14** and at least one electrical connecting component **16**, that is operatively joined to a length of cable **18**.

The connecting assembly **10** consists additionally of a second connector **20** having a coupling component **22** that is mechanically connected to the coupling component **14**. The second connector **20** additionally has at least one electrical connecting component **24** that cooperates with the electrical connecting component(s) **16** on the first connector **12**, to define at least one conductive path through the joined first and second connectors **12**, **20**. In FIG. **1**, the second connector **20** is operatively joined to a second length of cable **18**.

Alternatively, as shown in FIG. **2**, a corresponding, conventional, second connector **20'** may define a port **26**, such as an RF port, with the same type of removable coupling component **22'** as at **22** in FIG. **1**, and a corresponding electrical connecting component(s) **24'**.

The environment in FIGS. **1** and **2** is shown schematically since the invention is contemplated for use at any site whereat connectors are mechanically/electrically connected and where there is the potential for ingress of moisture and/or other foreign matter between the connectors as might compromise signal performance or system operation.

The inventive connecting assembly **10** of FIG. **1** includes a sealing assembly **30**, that cooperates with the coupling component **14**, and consists of a sealing subassembly **32** with a sealing portion **34**, and an actuator assembly **36** with at least one actuator/actuator component **38**. The sealing subassembly **32** is changeable between pre-assembled and sealing states. The actuator component **38** is movable guidingly along a central axis of the connecting assembly **10** relative to the joined first and second connectors **12**, **20** between first and second positions. As the actuator component **38** is advanced from its first position into its second position, the sealing subassembly **32** is changed from its pre-assembled state into its sealing state by causing the sealing portion **34** of the sealing subassembly **32** to be moved radially inwardly to be placed sealingly against and around a radially outwardly facing surface **40** on the second connector **20**, preferably by being compressed radially inwardly.

As seen in FIG. **3**, the sealing assembly **30** may be made available in conjunction with the first connector **12** as a separate, combined connecting assembly **42**, that may be mechanically and electrically connected to the cable **18** and joined to: a) the second connector **20**, as shown in FIG. **1**; b) the second connector as shown at **20'** in FIG. **2**; or c) any other type of connector as might be used in the industry and at which sealing is desired.

The invention is concerned primarily with the mechanical coupling aspects of the connecting assemblies **10**, **42**. The nature of the cable **18** and the electrical connecting components **16**, **24**, **24'** is not critical to the present invention and will not be described in detail herein. Myriad different types of cable are electrically joined to connectors in many different industries and for many different applications therewithin. Details of one exemplary electrical connecting component for coaxial cable are shown in U.S. Pat. No. 6,153,830, which is incorporated herein by reference.

In FIGS. **4-12**, one specific form of the connecting assembly **42** is shown, both separately and as part of an overall connecting assembly at **10'**, corresponding to the connecting assembly **10** in FIG. **1**, wherein the first connector **12** on the connecting assembly **42** is joined to the second connector **20'** defining the port **26** and having the associated electrical component(s) **24'**. It should be understood that this is but one exemplary form of the invention, as variations thereof, only some of which are set forth below, are contemplated.

The first connector **12** consists of the coupling component **14**, in this case in the form of a nut with internal threads **44** at one end of the first connector **12**, together with the electrical connecting component(s) **16**. The nut **14** has a generally cylindrical body **46** with a polygonally-shaped outer surface portion **48** that facilitates tightening and loosening, as with a conventional wrench. The nut **14** is thus removably attached through the threads, as to the port **26**, or any other threaded location at which an electrical and mechanical connection is to be made.

The sealing assembly **30** consists of the sealing subassembly **32** and the actuator assembly **36**, consisting potentially of multiple components, but in this case of a generally annular actuator/actuator component **38** mounted on an external surface of the nut **14**. The sealing subassembly **32** and actuator assembly **36** define a reconfigurable means for sealing around the surface **40**.

The components making up the connecting assembly **42** can be pre-assembled preparatory to joining the connecting assembly **42** to the cable **18** and to the second connector **20'**.

In this embodiment, the electrical connecting component (s) **16**, as shown in FIGS. **8** and **9**, has a tubular body **50** with a central axis **52** that coincides with the central axes of the connecting assembly **42** and the connecting subassembly **10'**. The nut **14** surrounds the body **50** and has a radially inwardly projecting, annular bead **54** with an axially facing shoulder **56** that abuts to a shoulder **58** on the body **50**. Through this arrangement, tightening of the nut **14** upon the port **26** causes the shoulder **56** to bear upon the shoulder **58** and thereby urge the connecting component(s) **16** in the direction of the arrow **60** in FIG. **8** into positive electrical contact with the electrical component(s) **24'** on the second connector **20'**.

The sealing subassembly **32** has a ring-shaped body **62** with a first part **64** defining the aforementioned sealing portion **34** and at its other end a second part **66**, defining an engagement portion, that is joined to a part of the connector **12**, and in this case mounted to the nut **14**. There are connecting parts on the second part **66** and nut **14**, respectively in the form of an annular, radially inwardly projecting bead **68**, and a complementary, radially outwardly opening annular recess **70**, that cooperate to allow the second part **66** of the sealing subassembly **32** and nut **14** to be press fit, and maintained, together. To allow this interaction, the second part **66** of the sealing subassembly **32**, and more preferably the entire sealing subassembly **32**, is made from a resilient material with good sealing properties, such as an elastomeric material.

By aligning the sealing subassembly **32** and nut **14** in coaxial relationship as in FIG. **4**, and pressing the sealing subassembly **32** and nut **14** axially towards, and against, each other from the separated relationship shown in FIG. **4**, the second part **66** can be stretched radially outwardly over the nut surface **72** at the nut end **74**. Once the bead **68** and recess **70** are moved into axial coincidence, the second part **66** tends towards it undeformed state, whereupon the annular bead **68** is drawn into the recess **70** to remain seated therewithin. The second part **66** and recess **70** together define a means, cooperating between the nut **14** and sealing subassembly **32**, for press-fitting, and thereby maintaining, the connector **12** and sealing subassembly **32** together with the nut **14** surrounding at least a part of the sealing subassembly **32**.

A split retaining ring **76** is seated in an annular undercut **78** through the nut surface **72** at an axial midportion between the nut end **74** and an opposite end **80**. The ring **76** is dimensioned to be deformable into the undercut **78** whereupon an outer surface **82** thereon is substantially flush with the nut surface **72** in the vicinity of the undercut **78**.

With the retaining ring **76** in place, the actuator component **38** can be directed from the separated position in FIG. **4** axially towards the nut **14** with the preassembled sealing subassembly **32**. The annular inside surface **84** of the actuator component **38** has a diameter slightly greater than that of the nut surface **72**. As a rounded, leading edge **86** of the actuator component **38** encounters, and continues to move relative to, the retaining ring **76**, the retaining ring **76** becomes progressively wedged into the undercut **78** to allow passage of the leading edge **86** therepast.

With the actuator component **38** in the first position therefor, as in FIG. **6**, the retaining ring **76** registers with an elongate, radially outwardly recessed, receptacle **88** through the surface **84**. The receptacle **88** has a radial dimension that allows the retaining ring **76** to spring outwardly, under restoring forces imparted by radially inward deformation, so as to secure the actuator component **38** and nut **14** against separation. More specifically, with the actuator component **38** in its first position, as seen in FIGS. **6-9**, an axially facing shoulder **90** on the retaining ring **76** confronts an axially oppositely facing shoulder **92** bounding the receptacle **88**. This precludes separation of the actuator component **38** and nut **14** by reversal of the aforementioned assembly steps.

An oppositely facing shoulder **94** on the retaining ring **76** is abuttable to a shoulder **96** at the axially opposite extremity of the receptacle **88**. As the actuator component **38** is moved from its first position into its second position of FIG. **10**, the shoulder **88** abuts the shoulder **94** on the retaining ring **76**. As a result, the actuator component **38** is confined by the retaining ring **76** to movement consistently in a predetermined axial range relative to the nut **14** between its first position and its second position.

With the connecting assembly **42** connected to the cable **18** and the actuator component **38** in its first position, the connecting assembly **42** can be aligned as in FIG. **8** relative to the second connector **20'**. In FIG. **8**, the connectors **12**, **20'** are in a separated state with the axis **52** of the connecting assembly **42** aligned with a central axis **98** on the second connector **20'**.

By then moving the first and second connectors **12**, **20'** axially towards each other, the internal threads **44** on the nut **14** can be initially engaged with external threads **100** on the port **26**. This represents a preliminary joined state for the first and second connectors **12**, **20'**. By then tightening the nut **14** to the port **26**, the first and second connectors **12**, **20'** are changed into a joined operative state, wherein the first and second connectors **12**, **20'** are secured together and at least one conductive path is defined through the joined first and second connectors **12**, **20'** between the cable **18** and the port **26**, through the electrical component(s) **16**, **24'**.

In a preferred form, the actuator component **38** has a receptacle **102** that is configured to make keyed connection with the polygonally-shaped surface portion **48** of the nut **14**. The receptacle **102** may be bounded by a surface assembly **104** that is complementary in shape to the polygonally-shaped surface portion **48**. Alternatively, any cooperating arrangement that would effect keying between the nut **14** and actuator component **38** is contemplated. Through this keyed connection, the nut **14** follows rotational movement of the actuator component **38** around the central axis **52**. The receptacle **102**

has a sufficient axial extent that keyed engagement will be maintained between the actuator component **38** and nut **14** with the actuator component **38** in both its first and second positions.

In this embodiment, the outer surface **106** of the actuator component **38** has peripherally spaced flats **108** that cooperatively produce a polygonal shape that can be engaged either by hand or by a conventional wrench to effect turning of the actuator component **38**.

With the system in the FIG. **9** state, the sealing portion **34** of the sealing subassembly **32** resides in axial coincidence with the radially outwardly facing surface **40** on the port **26**. While the surface **40** is shown as smooth, it could be threaded or otherwise configured.

As seen in FIG. **6**, the sealing portion **34**, as viewed in cross section, is bounded by a "V", which "V" opens radially outwardly. The "V" is defined by surface portions **110**, **112** that converge to an apex **114**.

With the construction of the sealing subassembly **32** shown, a hinge **116** is defined at a region between the first and second parts **64**, **66** at which the first part **64** is allowed to be bent radially inwardly relative to the second part **66**, as indicated by the arrow **117**. The hinge **116** bends at a fulcrum defined at the outer corner **11 8** of the nut **14** at the nut end **74**.

In a preferred form, the apex **114** defines an effective inner diameter D (FIG. **9**) for the sealing subassembly **32** that is greater than that D**1** (FIG. **8**) of the port surface **40**, whereby in the FIG. **9** arrangement, there is a slight circumferential, radial gap G between the apex **114** and surface **40**. Preferably, this diameter D is greater than the diameter for the entire axial extent of the port **26** that the sealing subassembly **32** is required to pass over, regardless of its profile. With this arrangement which is preferred but not required, there is no interference between the sealing subassembly **32** and port **26** as the system is changed from the state in FIG. **8** to that in FIG. **9**, wherein the apex **114** aligns over the surface **40**.

Once the FIG. **9** state is realized, the actuator component **38** can be shifted axially in a straight line to be changed from its first position of FIG. **8** into its second position of FIGS. **10** and **11**. As this occurs, the leading edge **86** of the actuator component **38** bears against a ramp surface **120** to progressively bend the first part **64** radially inwardly to thereby reduce the effective diameter of the sealing portion **34**. The apex **114** on the sealing portion **34** initially moves from a radially spaced relationship to make line contact with the surface **40**, continuously therearound. The contact area progressively enlarges as the second part **66** bends radially inwardly and is captively compressed and deformed between the inside surface **84** of the actuator component **38**, adjacent to the leading edge **86**, and the port surface **40**. This enhancing sealing action is facilitated by making the first part **64** of the sealing subassembly **32** of progressively increasing thickness between the hinge **116** and the axial end **122**. By reason of this configuration, the axial contact width, and sealing pressure, between the sealing portion **34** and port surface **40**, progressively increase proportionately to a degree of compression of the first part **64** between the actuator component **38** and the port surface **40**.

Ideally, the sealing subassembly **32**, and at least the first part **64** thereof, is made from sufficiently resilient and soft material that will allow the sealing portion **34** to be changed over a significant range of diameters to thereby accommodate different profiles and sizes of components. Thus, a relatively universal construction can be made for the sealing subassembly **32** that will effectively establish and maintain a high integrity seal around the surface engaged thereby.

At the same time, the second part **66** of the sealing subassembly **32** is preferably compressed sealingly between the nut **14** and actuator component **38** to establish a positive seal that avoids ingress of moisture/matter between the leading edge **86** of the actuator component **38** and the nut **14**.

While in a preferred form, the system is configured as shown in FIG. **8** preparatory to joining the connectors **12**, **20'**, it is also possible to configure the sealing assembly **30** so that it can be slid axially into the FIG. **8** position after the nut **14** is tightened to the port **26**. This obviates the need to key the nut **14** and actuator component **38** together for purposes of turning the nut **14** to effect tightening thereof on a cooperating connector.

While the actuator component **38** is shown to be guided axially by the nut **14** in a straight line translatory path between its first and second positions, other cooperation between these components is contemplated. For example, as shown in FIG. **13**, a generic actuator component **38'**, corresponding to the actuator component **38**, may be moved guidingly relative to the nut **14'** through cooperating connecting parts **124**, **126**, respectively on these components, that apart from cooperating sliding surfaces, described above, may be cooperating threads, cooperating bayonet connecting parts, or any other type of connecting part known to those in the art. Other retaining structure might be incorporated to set a predetermined relationship, such as cooperating detents, latch components, etc. Components with a locking feature may be used for purposes of security.

In FIG. **14**, a further modified form of actuator component is shown at **38"** with the sealing subassembly **32** and nut **14** operatively joined in a manner corresponding to that for the actuator component **38**, sealing component **32**, and nut **14** in FIG. **5**. The only structural and functional distinction between the structures shown in FIGS. **5** and **14** is that the actuator component **38"** has a knurled outer surface portion at **128**, defined by a plurality of raised axially extending ribs **130** equidistantly spaced fully around the circumference of the surface portion. The knurled surface portion **128** facilitates hand gripping and turning as well as axial shifting of the actuator component **38"**. Thus, at least preliminary hand tightening of the nut **14** can be accomplished by manipulating the actuator component **38** through two or more user fingers gripping the knurled outer surface portion **128**. The surface portion **132** is flattened to produce a polygonal shape engagable by a conventional wrench.

A modified form of connecting assembly is shown at **42'** in FIGS. **15-19**. The connecting assembly **42'** is depicted in association with the connector **20'**, as shown in earlier Figures, with the connector **20'** defining the port **26** with the associated electrical component(s) **24'**.

The connecting assembly **42'** differs from the connecting assembly **42** in two respects. First of all, the connecting assembly **42'** incorporates a boot assembly **140**. Secondly, the actuator component **38'''** has an outer surface **142** with a different configuration to accommodate the boot assembly **140**. In all other respects, the connecting assembly **42'** cooperates with the cable **18** and second connector **20'** in the same manner as described for the connecting assembly **42**.

The outer surface **142** on the actuator component **38'''** has a uniform diameter surface portion **144**, over approximately half of the axial extent of the actuator component **38'''**, and a polygonally-shaped surface portion **146** over its other half. The configuration of the outer surface **142** is designed to cooperate with a receptacle **148** defined by a body **150** on the boot assembly **140**.

The receptacle **148** has a stepped diameter through bore **152** with: a) a small diameter portion **154** that closely seal-

ingly engages fully around the outside surface **156** of the cable **18**; b) an intermediate diameter portion **158** that accommodates the polygonally-shaped surface portion **146** on the actuator component **38'''**; and c) a large diameter portion **160** that accommodates the uniform diameter surface **144** on the actuator component **38'''**.

The connecting assembly **42'** can be changed from the FIG. **15** state into the FIG. **16** state by engaging the internal threads **44** on the nut **14** with the external threads **100** on the port **26** and turning the nut **14** by hand or through the polygonally-shaped surface portion **146** with a wrench to generate the desired torque to tighten the connection to the desired degree. Thereafter, the boot assembly **140** is shifted in the direction of the arrow **162** in FIG. **16** from the separated, pre-assembly position in FIG. **16** up to the FIG. **17** actuating/assembly position, wherein an axially facing shoulder **164**, defined at a step between the intermediate and large diameter portions **158**, **160** of the through bore **152**, abuts to the axial nut end **166**. In this position, the inside surface portion **168**, bounding the large diameter portion **160** of the through bore **152**, sealingly engages the uniform surface diameter portion **144** on the actuator component **38'''**. An inside surface portion **170**, bounding the intermediate diameter portion **158**, sealingly surrounds an outer surface portion **172** on the body **50** to effect a seal therearound. An inside surface portion **174**, bounding the small diameter portion **154** of the through bore **152**, extends sealingly around the cable **18**.

In addition to the sealing that is afforded by the extended axial dimension of the boot assembly **140**, this construction presents a large outer surface **176** on the body **150** that is comfortably manipulated and facilitates positive hand grasping to facilitate axial shifting of the boot assembly **140**. By grasping and moving the boot assembly **140** in the direction of the arrow **178** in FIG. **17**, the shoulder **164** bears upon the actuator component **38'''**, thereby to allow shifting of the same from a first position in FIG. **17** into a second position in FIG. **18**, whereupon the sealing subassembly **32** is changed from its pre-assembled state into its sealing state, as respectively shown in these same Figures.

In the event that there is a need to access the connection at the port **26**, the boot assembly **140** can be axially moved in the direction of the arrow **180** in FIG. **19**, from the FIG. **18** position, to expose the same similarly as in FIG. **16**, but with the sealing subassembly **32** in the sealing state. Thus, the boot assembly **140** provides an additional sealing aspect and also facilitates repositioning of the actuator component **38'''**.

As shown in FIG. **20**, a modified form of the boot assembly **140'** may perform an additional function. In FIG. **20**, cooperating locking components **182**, **184** are shown on the boot assembly **140'** and a connector **186** with which a connector, with which the boot assembly **140'** is associated, is joined. Through the locking components **182**, **184**, a relationship for the boot assembly **140'**, corresponding to that for the boot assembly **140** in FIG. **18**, may be permanently maintained so as to prohibit access to the connection as might permit tampering or signal interference or theft. Provision might be made to limit access to authorized personnel by incorporating a safety feature into the locking components **182**, **184** which allows only authorized personnel to effect release of the boot assembly **140'**.

It should also be noted that supplementary sealing structure might also be utilized in conjunction with the inventive structure. For example, heat shrinkable sealing components, tape, O-rings, rubber boots, etc., might be incorporated.

With the structure described above, first and second connectors, with virtually an unlimited number of different constructions, may be connected through a method as depicted in block diagram form in FIG. **21**.

As shown at block **188**, a first connector is provided with a first cable length operatively connected thereto. As shown at block **190**, a second connector with a central axis and a radially outwardly facing surface is provided. As shown at block **192**, a sealing assembly is provided. As shown at block **194**, the first and second connectors are joined together into a preliminary joined state. As shown at block **196**, the relationship of the first and second connectors is changed to a joined operative state, wherein the first and second connectors are secured together. As shown at block **198**, the actuator component is changed from its first position into its second position, thereby causing a part of the sealing subassembly to bend to thereby cause a sealing portion on the part of the sealing subassembly to be reduced from a first effective diameter to a second effective diameter smaller than the first effective diameter. This may bring the sealing portion from a radially spaced relationship into sealing engagement with a radially outwardly facing surface.

The foregoing disclosure of specific embodiments is intended to be illustrative of the broad concepts comprehended by the invention.

The invention claimed is:

1. A sealing assembly for a coaxial cable connector, the connector having at one end a threaded nut for threaded engagement with an RF port to thereby removably attach the coaxial cable connector to the RF port, the sealing assembly comprising:

a sealing subassembly changeable between a pre-assembled state and a sealing state, the sealing subassembly having spaced ends with an engagement portion at one of the sealing subassembly ends and a sealing portion at the other sealing subassembly end, the engagement portion mounted to the nut; and

an actuator mounted on an external surface of the nut,

wherein axial advancement of the actuator changes the sealing subassembly from the pre-assembled state into the sealing state and thereby causes the sealing portion to compress radially inwardly around the RF port.

2. The sealing assembly for a coaxial cable connector according to claim **1** wherein the sealing portion has a surface bounded by a radially outwardly opening "V" with the sealing subassembly viewed in cross section.

3. The sealing assembly for a coaxial cable connector according to claim **1** in combination with a coaxial cable length operatively connected to the connector.

4. The sealing assembly for a coaxial cable connector according to claim **1** wherein the actuator is moved axially along a central axis between first and second positions to change the sealing subassembly between the pre-assembled state and the sealing state, and the actuator and nut are maintained together and are movable relative to each other axially to allow the actuator to be changed between the first and second positions.

5. The sealing assembly for a coaxial cable connector according to claim **4** wherein the nut and actuator are keyed to each other to limit relative movement between the nut and actuator around the central axis, thereby allowing the actuator to be turned around the central axis to thereby turn the nut around the central axis.

6. The sealing assembly for a coaxial cable connector according to claim **4** wherein the nut and actuator are guided one against the other as the actuator is moved relative to the nut between the first and second positions and there are one of: a) cooperating threads on the nut and actuator that allow the nut and actuator to be turned relative to each other around

the central axis to effect relative axial movement therebetween; and b) cooperating surfaces on the nut and actuator through which the nut and actuator can be guided slidingly against each other in a straight line generally parallel to the central axis.

7. The sealing assembly for a coaxial cable connector according to claim **1** wherein the sealing subassembly comprises a hinge at which the sealing subassembly can bend to cause a first part of the sealing subassembly, on which the sealing portion is defined, to move radially inwardly relative to a second part of the sealing subassembly, on which the engagement portion is defined, as the sealing subassembly is changed from the pre-assembled state into the sealing state.

8. The sealing assembly for a coaxial cable connector according to claim **7** wherein there are cooperating connecting parts on the second part of the sealing subassembly and nut that allow the sealing subassembly and nut to be press fit, and maintained, together.

9. The sealing assembly for a coaxial cable connector according to claim **7** wherein the actuator surrounds the first part of the sealing subassembly so that the first part of the sealing subassembly is captive between the actuator and a radially outwardly facing surface on the RF port.

10. The sealing assembly for a coaxial cable connector according to claim **9** wherein the radially outwardly facing surface has a first diameter, the sealing portion has a second diameter that is greater than the first diameter with the sealing subassembly in the pre-assembled state so that the sealing portion can be moved axially relative to the radially outwardly facing surface without any interference between the sealing portion and radially outwardly facing surface with the sealing subassembly in the pre-assembled state.

11. A sealing assembly for a coaxial cable connector, the connector having at one end a threaded nut for removable attachment to an RF port, the sealing assembly comprising:

a sealing subassembly changeable between a pre-assembled state and a sealing state, the sealing subassembly having at one end an engagement portion and at its other end a sealing portion, the engagement portion mounted to the nut; and

an actuator mounted on an external surface of the nut,

wherein axial advancement of the actuator changes the sealing subassembly from the pre-assembled state into the sealing state and thereby causes the sealing portion to compress radially inwardly around the RF port,

wherein the actuator is moved axially between first and second positions to change the sealing subassembly from the pre-assembled state into the sealing state,

the connecting assembly further comprising a boot assembly that is engagable with the actuator and manipulable to thereby move the actuator from the first position into the second position.

12. The sealing assembly for a coaxial cable connector according to claim **11** wherein the boot assembly is configured to sealingly receive a part of the actuator and seal directly against and around a cable connected to the connector.

13. A sealing assembly for a connecting assembly for coaxial cable, the connecting assembly comprising a first connector that can be electrically connected to a first length of coaxial cable and having a central axis, the first connector comprising an internally threaded nut that can be engaged with external threads on a second connector to establish electrical connection between a first length of coaxial cable electrically connected to the first connector and one of: a) a second length of coaxial cable; or b) a port defined by the second connector, the sealing assembly comprising:

a sealing subassembly that is changeable between pre-assembled and sealing states and defines a sealing portion; and

an actuator component that is movable guidingly axially relative to the first nut between first and second positions,

the actuator component, as an incident of moving between the first and second positions, changing the sealing subassembly from the pre-assembled state into the sealing state by bending a part of the sealing subassembly and thereby changing an effective diameter of the sealing portion that is engageable with a radially outwardly facing surface on a second connector to which the first connector is joined;

wherein the sealing assembly comprises a hinge at which the sealing subassembly bends to cause a first part of the sealing subassembly, on which the sealing portion is defined, to move radially inwardly relative to a second part of the sealing subassembly, as the sealing subassembly is changed from the pre-assembled state into the sealing state.

14. The sealing assembly for a coaxial cable connecting assembly according to claim **13** wherein the nut and actuator component are keyed to each other to limit relative movement between the nut and actuator component around the central axis, thereby allowing the actuator component to be turned around the central axis and to thereby turn the nut around the central axis to facilitate threaded engagement of the nut with a second connector.

15. The sealing assembly for a coaxial cable connecting assembly according to claim **13** wherein there are cooperating connecting parts on the sealing subassembly and nut that allow the sealing subassembly and nut to be press fit, and maintained, together.

16. The sealing assembly for a coaxial cable connecting assembly according to claim **13** wherein the sealing portion has a surface bounded by a radially outwardly opening "V" with the sealing subassembly viewed in cross section.

17. The sealing assembly for a coaxial cable connecting assembly according to claim **13** wherein the nut and actuator component are guided one against the other as the actuator component is moved relative to the nut between the first and second positions and there are one of: a) cooperating threads on the nut and actuator component that allow the nut and actuator components to be turned relative to each other around the central axis to effect relative axial movement therebetween; and b) cooperating surfaces on the nut and actuator component through which the nut and actuator component can be guided slidingly against each other in a straight line generally parallel to the central axis.

18. A sealing assembly for a connecting assembly for coaxial cable, the connecting assembly comprising a first connector that can be electrically connected to a first length of coaxial cable and having a central axis, the first connector comprising an internally threaded nut that can be engaged with external threads on a second connector to establish electrical connection between a first length of coaxial cable electrically connected to the first connector and one of: a) a second length of coaxial cable; or b) a port defined by the second connector, the sealing assembly comprising:

a sealing subassembly that is changeable between pre-assembled and sealing states and defines a sealing portion; and

an actuator component that is movable guidingly axially relative to the first nut between first and second positions,

the actuator component, as an incident of moving between the first and second positions, changing the sealing subassembly from the pre-assembled state into the sealing state by bending a part of the sealing subassembly and thereby changing an effective diameter of the sealing portion that is engageable with a radially outwardly facing surface on a second connector to which the first connector is joined,

wherein the connecting assembly further comprises a boot assembly that is engageable with the actuator component and manipulable to thereby move the actuator component relative to the nut from the first position into the second position.

19. The sealing assembly for a coaxial cable connecting assembly according to claim **18** wherein the boot assembly is configured to sealingly receive a part of the actuator component and seal directly against and around a first length of coaxial cable electrically connected to the first connector.

20. A method of joining first and second connectors, the method comprising the steps of:

providing a first connector with a first cable length operatively connected thereto;

providing a second connector with a central axis and a radially outwardly facing surface;

providing a sealing assembly;

joining the first and second connectors together into a preliminary joined state;

changing the relationship of the first and second connectors to a joined operative state wherein the first and second connectors are secured together; and

changing the actuator component from a first position into a second position and thereby causing a part of the sealing subassembly to bend at a hinge location to thereby cause a sealing portion on the part of the sealing subassembly to be reduced from a first effective diameter to a second effective diameter, smaller than the first effective diameter, thereby to bring the sealing portion from a radially spaced relationship into sealing engagement with the radially outwardly facing surface.

21. The method of joining first and second connectors according to claim **20** wherein the second connector has an effective outer diameter along an axial extent over which the sealing portion passes as the first and second connectors are changed from a separated state into the joined operative state and with the actuator in the first position the first effective diameter of the sealing portion is greater than the effective outer diameter of the second connector over the entire axial extent.

22. The method of joining first and second connectors according to claim **20** wherein the actuator component is changed from the first position into the second position after the first and second connectors are changed into the joined operative state.

23. The method of joining first and second connectors according to claim **22** wherein the first connector comprises a threaded nut and the step of changing the actuator component from a first position into a second position comprises moving the actuator component guidingly along an external surface of the nut.

* * * * *