US006834942B2

(12) **United States Patent**
Trueba et al.

(10) **Patent No.: US 6,834,942 B2**
(45) **Date of Patent: Dec. 28, 2004**

(54) **FLUID EJECTOR HEAD HAVING A PLANAR PASSIVATION LAYER**

(75) Inventors: **Kenneth E Trueba**, Philomath, OR (US); **Ronnie J. Yenchik**, Blodgett, OR (US); **Ronald A. Hellekson**, Eugene, OR (US)

(73) Assignee: **Hewlett-Packard Development Company, L.P.**, Houston, TX (US)

(*) Notice: Subject to any disclaimer, the term of this patent is extended or adjusted under 35 U.S.C. 154(b) by 0 days.

(21) Appl. No.: **10/852,894**

(22) Filed: **May 24, 2004**

(65) **Prior Publication Data**

US 2004/0212663 A1 Oct. 28, 2004

Related U.S. Application Data

(62) Division of application No. 10/198,904, filed on Jul. 19, 2002, now Pat. No. 6,767,474.

(51) **Int. Cl.**[7] **B41J 2/05**
(52) **U.S. Cl.** **347/63**
(58) **Field of Search** 347/63, 56, 54, 347/20, 68, 71, 64, 61; 216/27, 4, 29; 29/890.1; 430/311

(56) **References Cited**

U.S. PATENT DOCUMENTS

4,734,563	A		3/1988	Lloyd
6,137,443	A		10/2000	Beatty et al.
6,153,114	A		11/2000	Figuerdo et al.
6,183,067	B1		2/2001	Matta
6,267,905	B1		7/2001	Silverbrook
6,274,056	B1		8/2001	Silverbrook
6,372,609	B1		4/2002	Aga et al.
6,378,996	B1		4/2002	Shimada et al.
6,402,972	B1		6/2002	Weber et al.
6,767,474	B2	*	7/2004	Trueba et al. 216/27
2002/0075346	A1		6/2002	Xu et al.

OTHER PUBLICATIONS

U.S. Appl. No. 10/003,780; filed Oct. 31, 2001; Applicant: Charles Haluzak, et al; Title: Fluid Ejection Device Fabrication 33 pages.

"Research & Development" SiGen (Silicon Genesis C orp.) 3 pages printed from the web url: http://www.sigen.com/research.htm on Jul. 16, 2002.

* cited by examiner

Primary Examiner—Raquel Yvette Gordon
(74) *Attorney, Agent, or Firm*—Donald J. Coulman

(57) **ABSTRACT**

A fluid ejector head, includes a fluid definition layer defining a chamber, the fluid definition layer having a substantially planar passivation surface. In addition, the fluid ejector head includes a sacrificial material filling the chamber that is planarized to the plane formed by the passivation surface. Further, the fluid ejector head includes a passivation layer, having substantially planar opposed major surfaces, formed on the planar passivation surface; and a resistive layer having substantially planar opposed major surfaces in contact with the passivation layer.

34 Claims, 16 Drawing Sheets

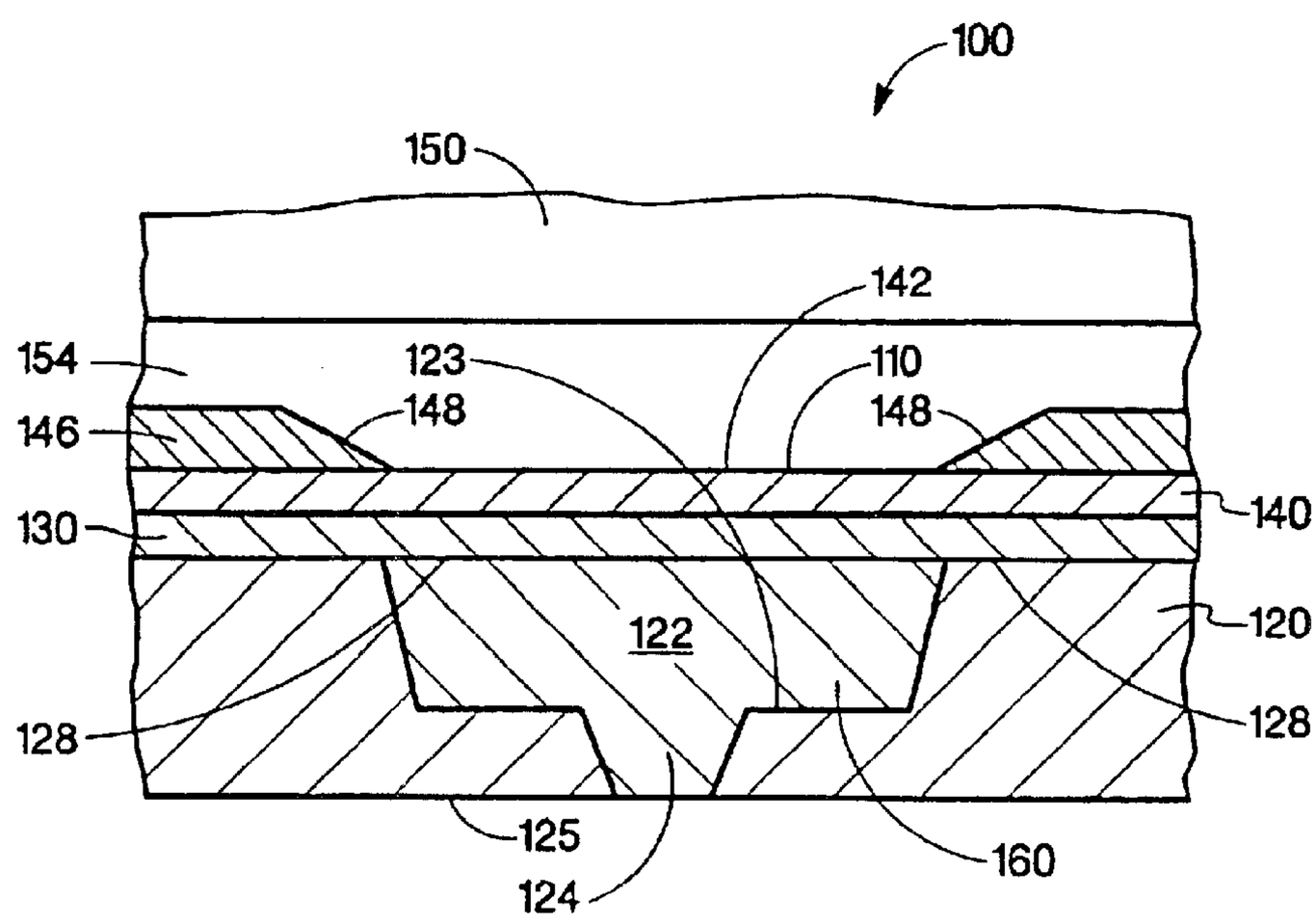

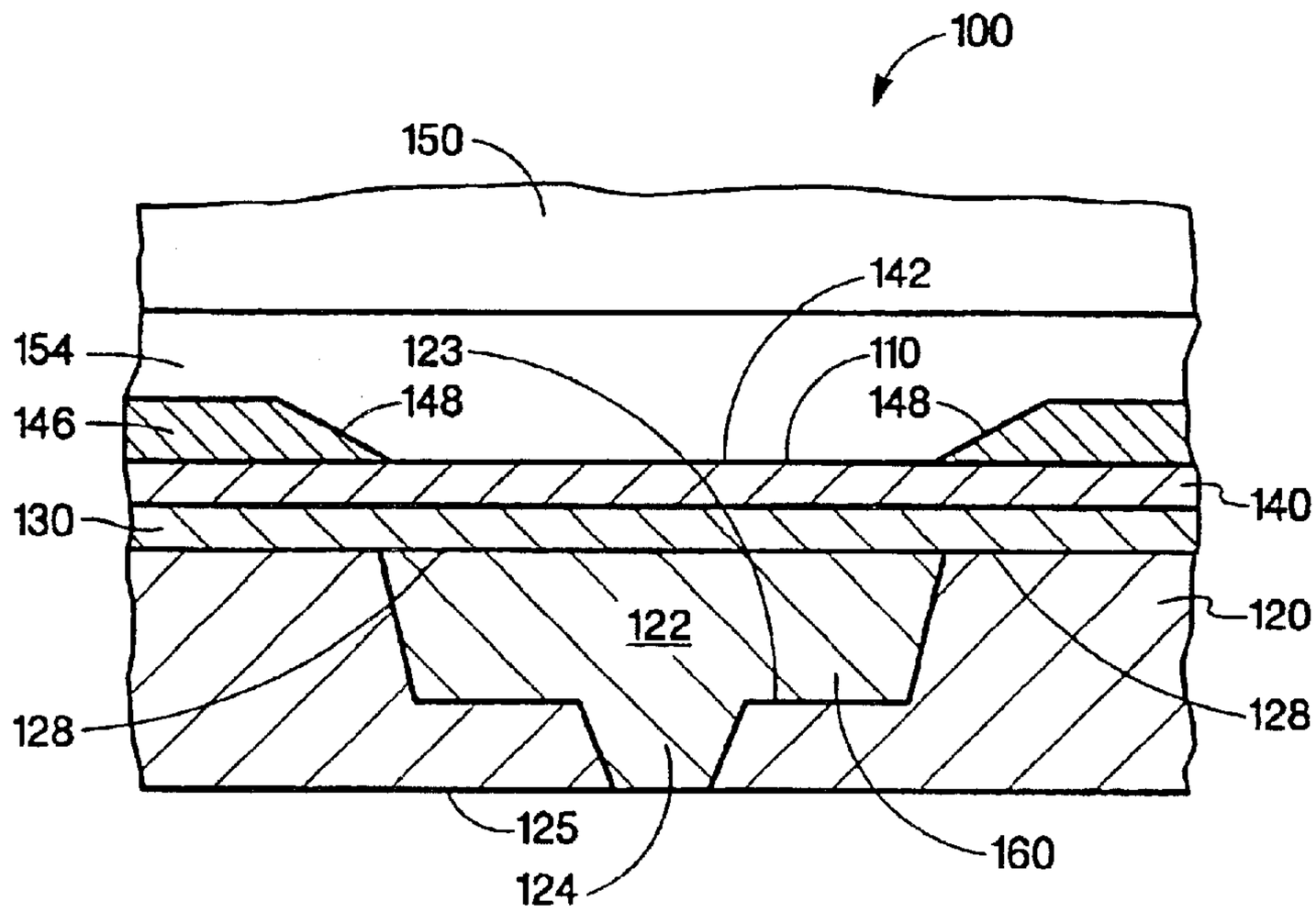
100
150
142
154
123
110
146
148
148
140
130
122
120
128
128
125
160
124

Fig. 1

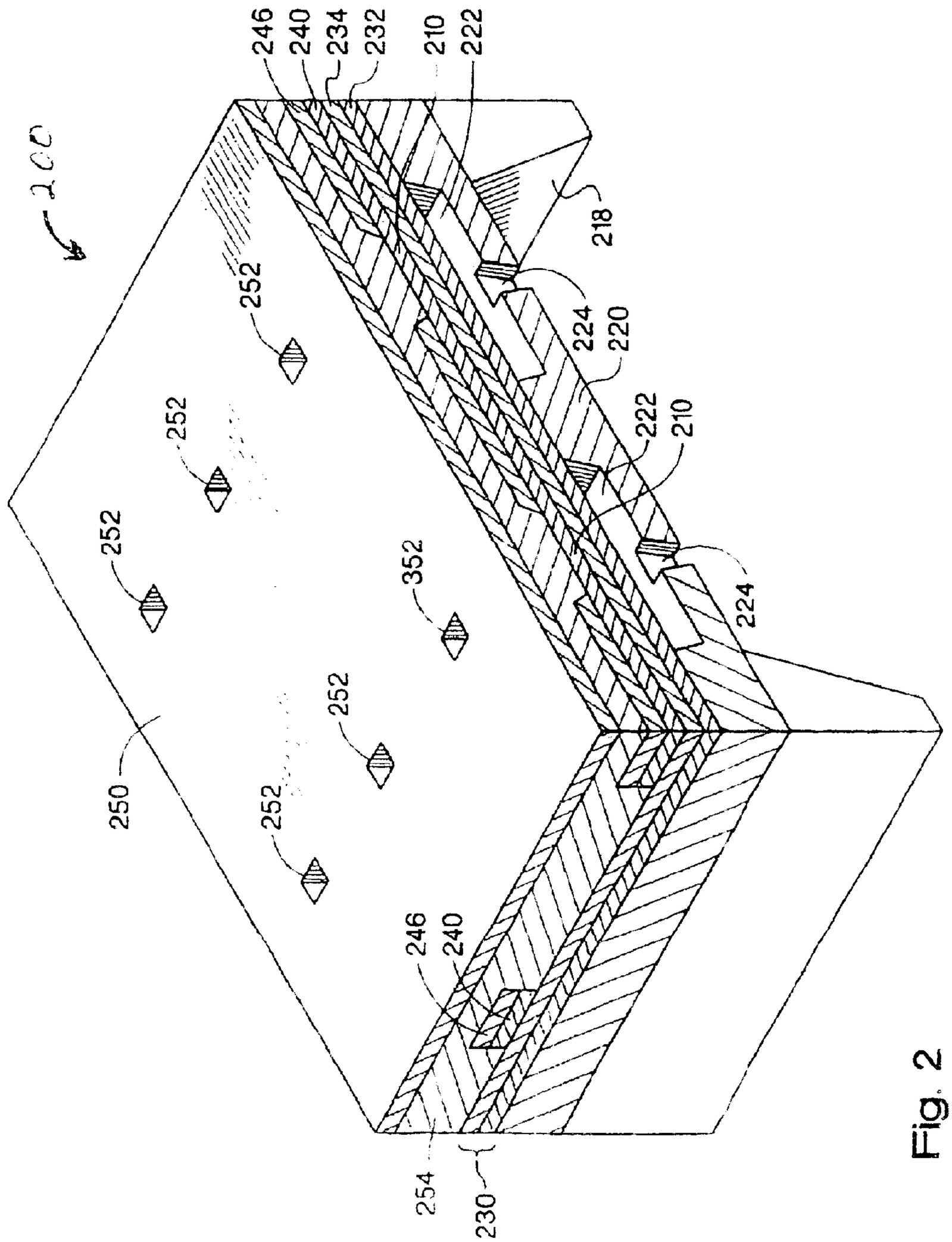
200
246
240
234
232
210
222
218
224
220
222
210
224
252
252
252
352
252
252
250
246
240
254
230

Fig. 2

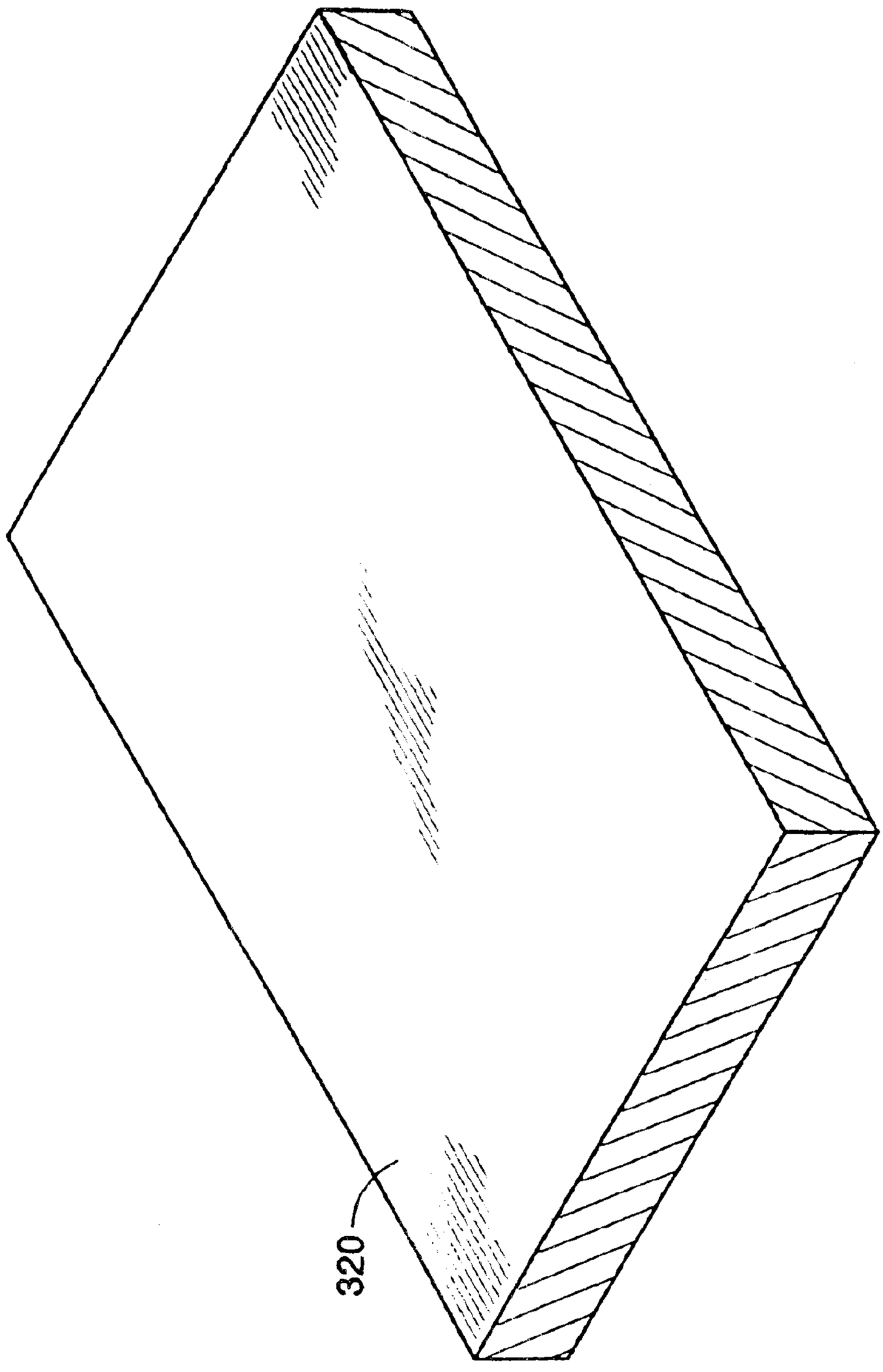

Fig. 3a

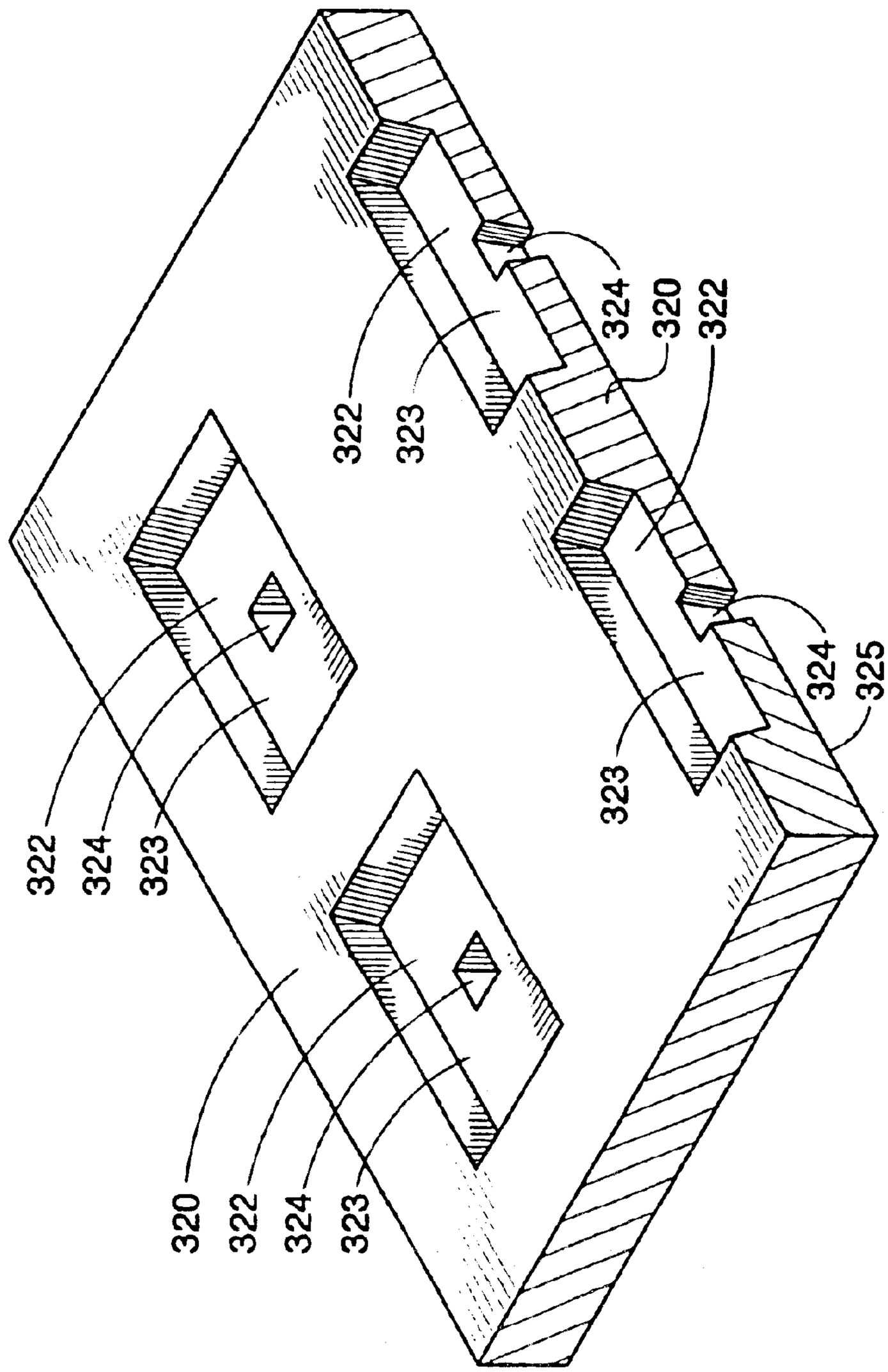

Fig. 3b

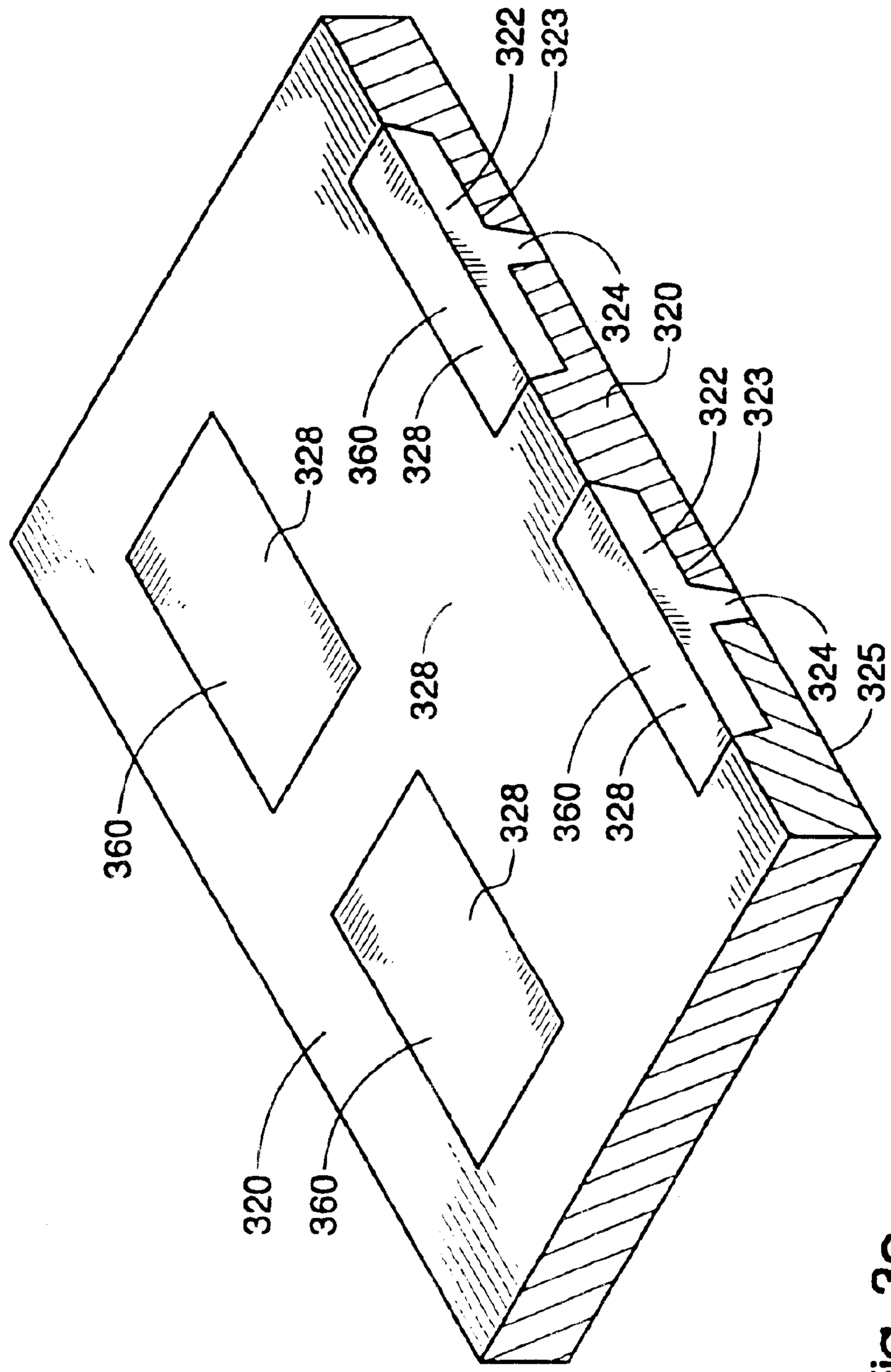
322
323
324
320
322
323
360
328
328
324
325
328
360
328
360
328
360
320
360

Fig. 3c

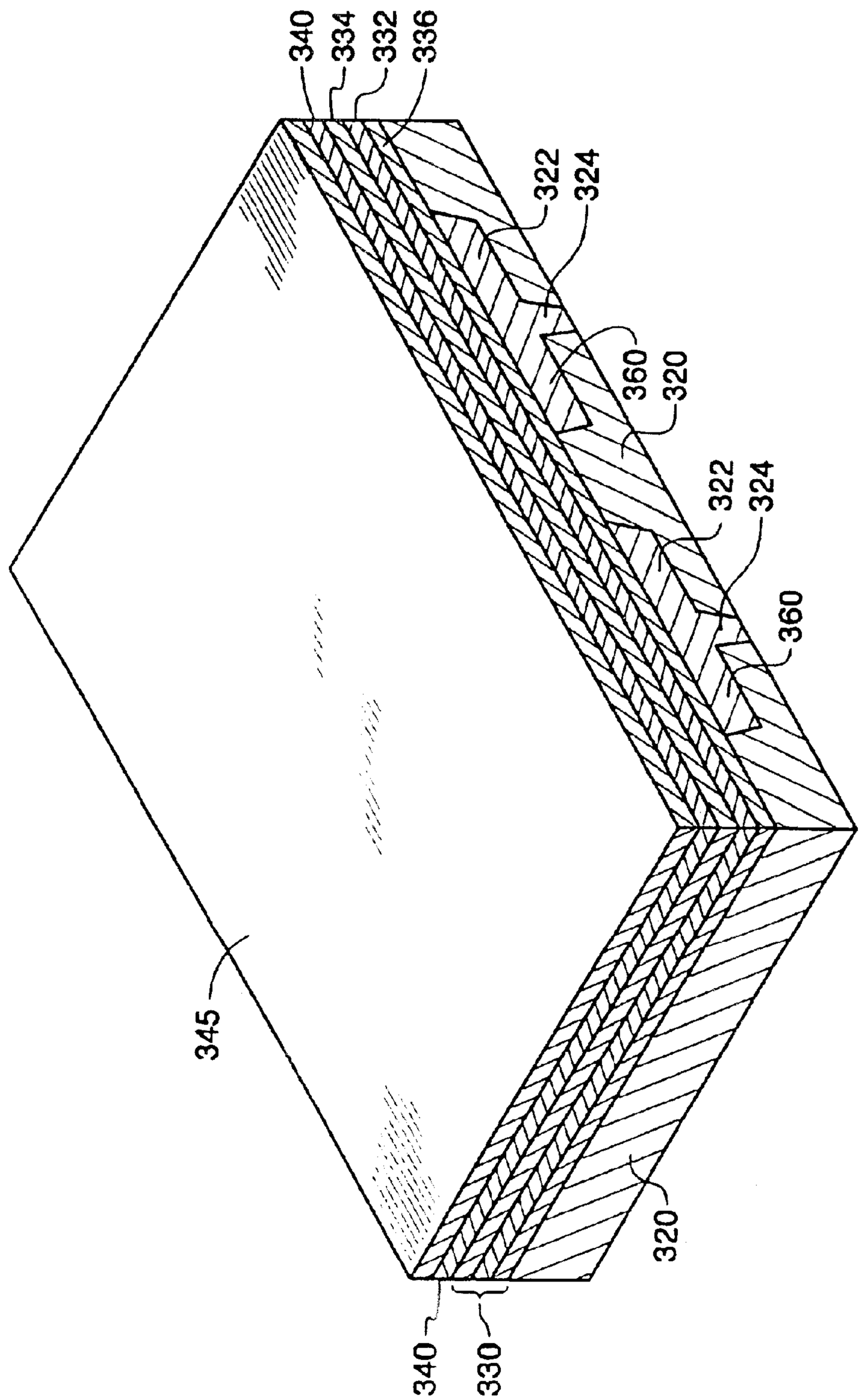

Fig. 3d

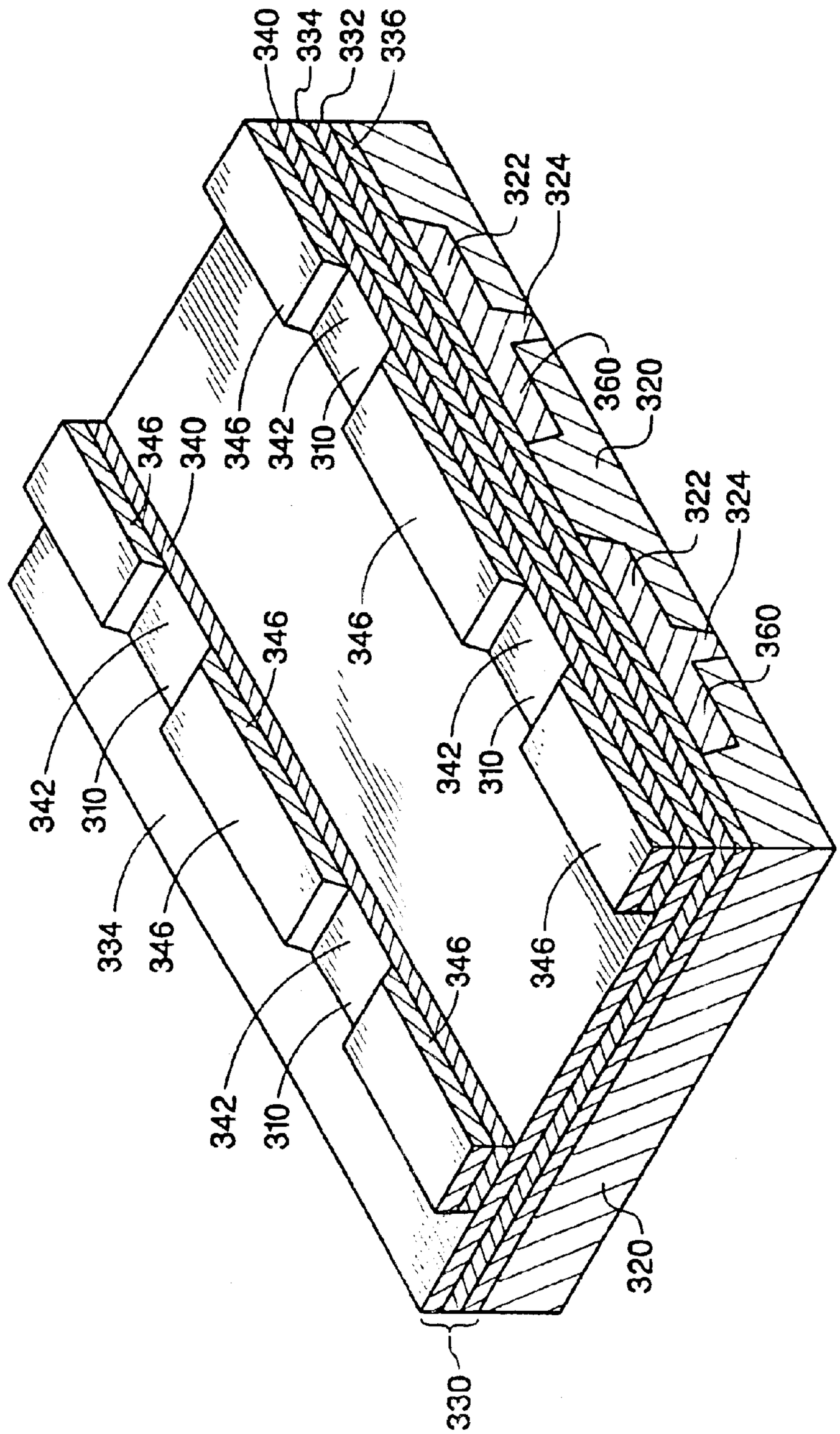
340
334
332
336
322
324
360
320
346
340
346
342
310
322
324
360
346
346
342
310
342
310
334
346
346
346
342
310
320
330

Fig. 3e

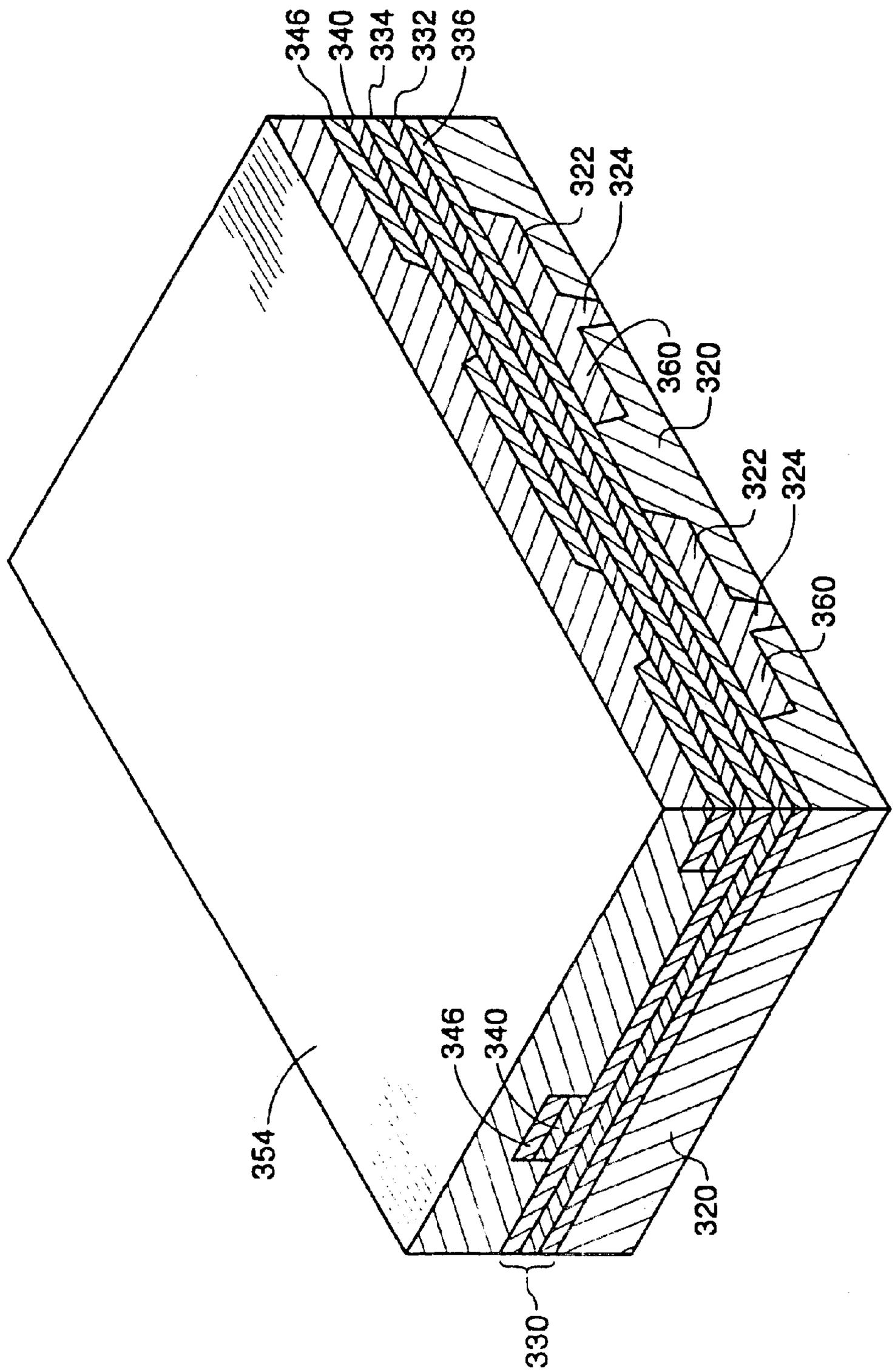
346
340
334
332
336
322
324
360
320
322
324
360
346
340
354
320
330

Fig. 3f

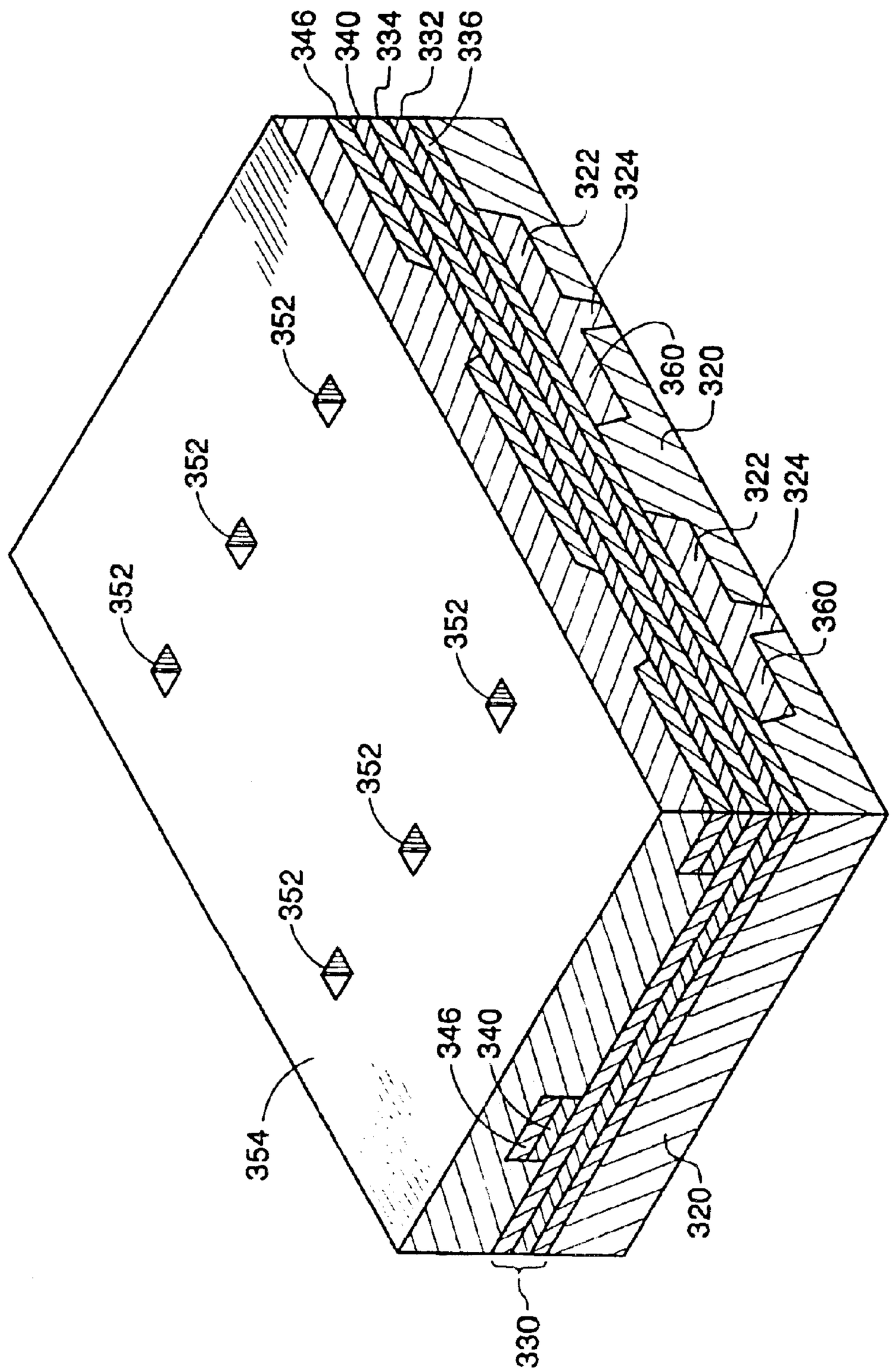
346
340
334
332
336
322
324
352
360
320
352
322
324
352
360
352
352
352
352
346
340
354
320
330

Fig. 3g

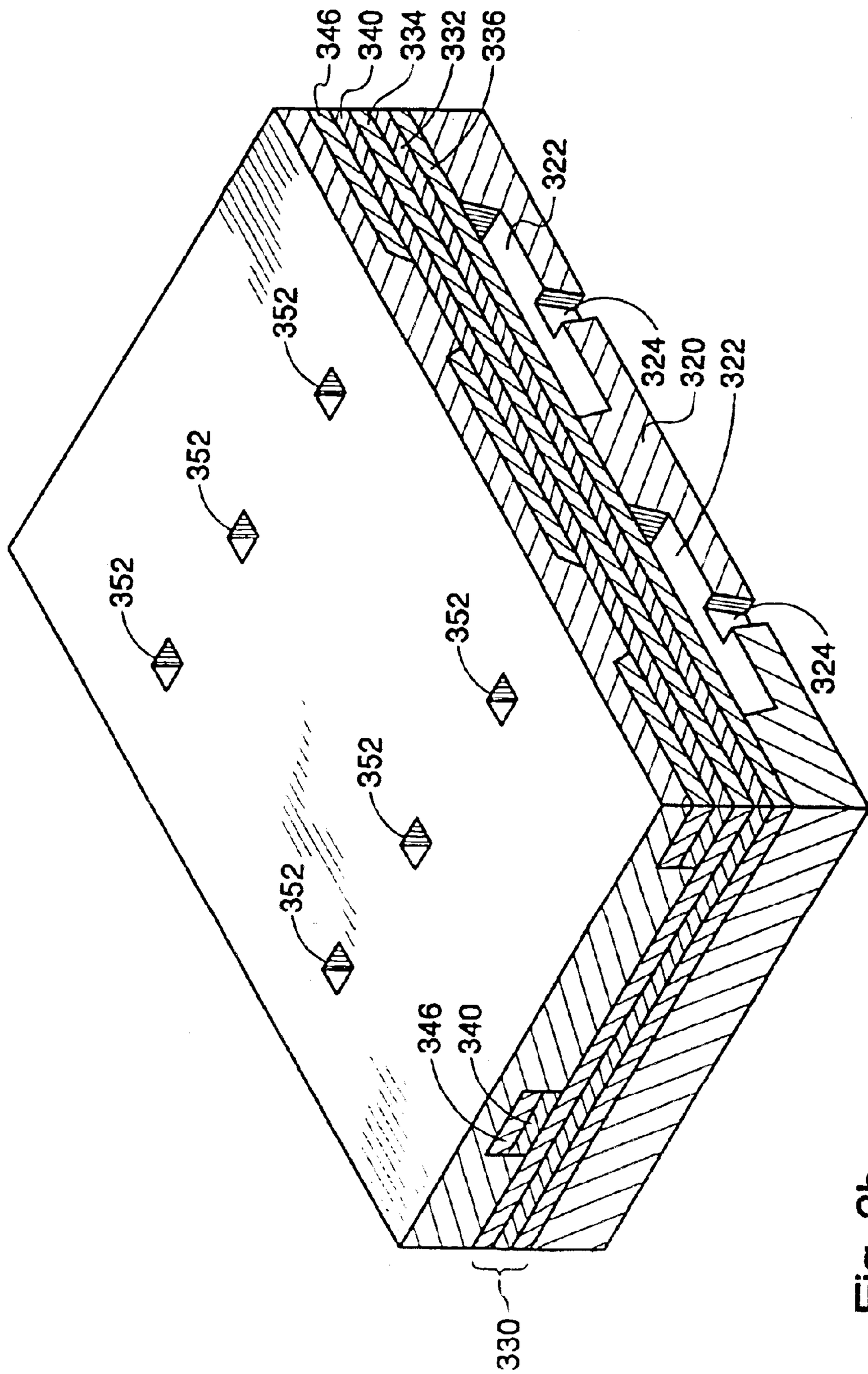
346
340
334
332
336
322
324
320
322
352
352
352
352
352
352
324
346
340
330

Fig. 3h

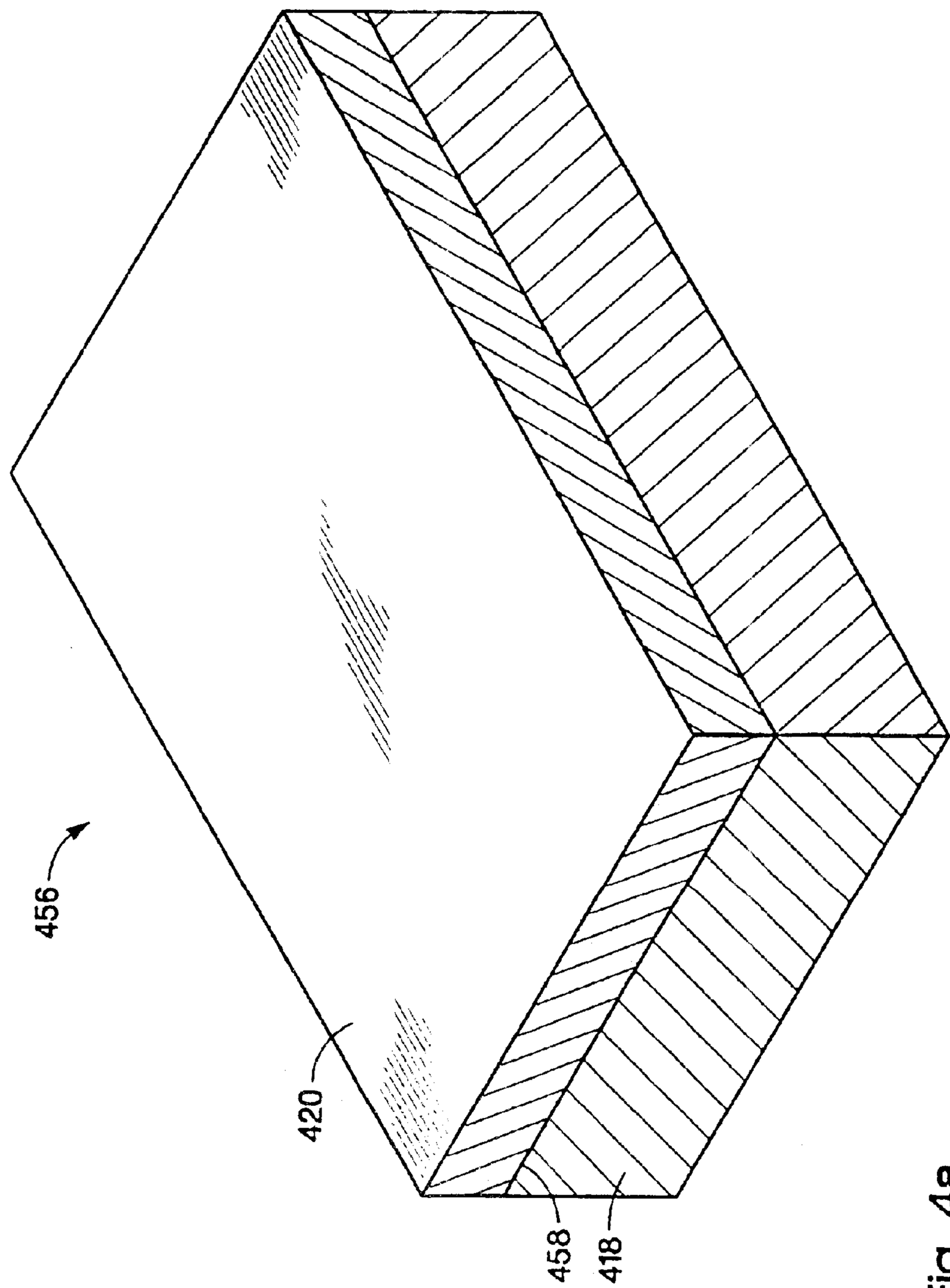

Fig. 4a

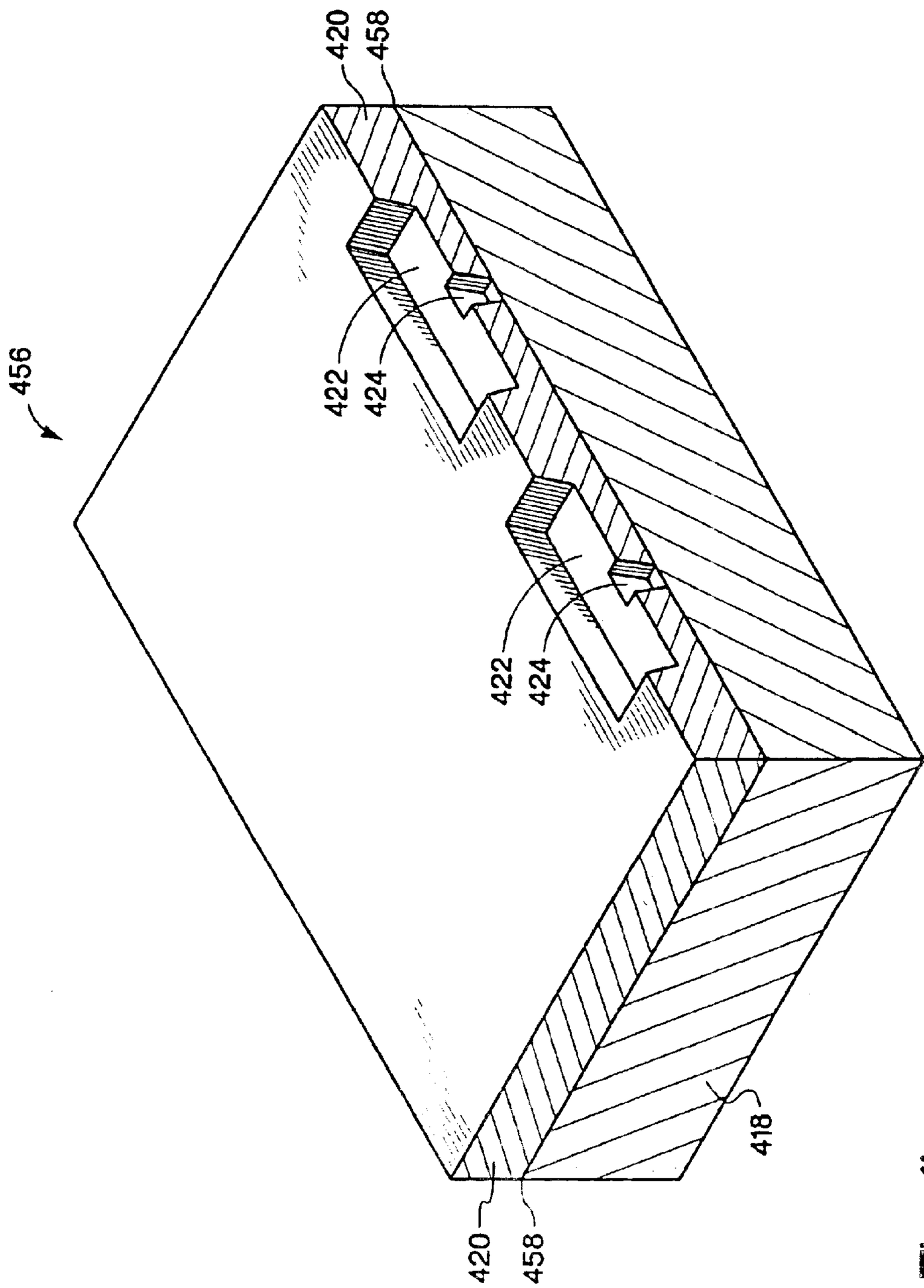

Fig. 4b

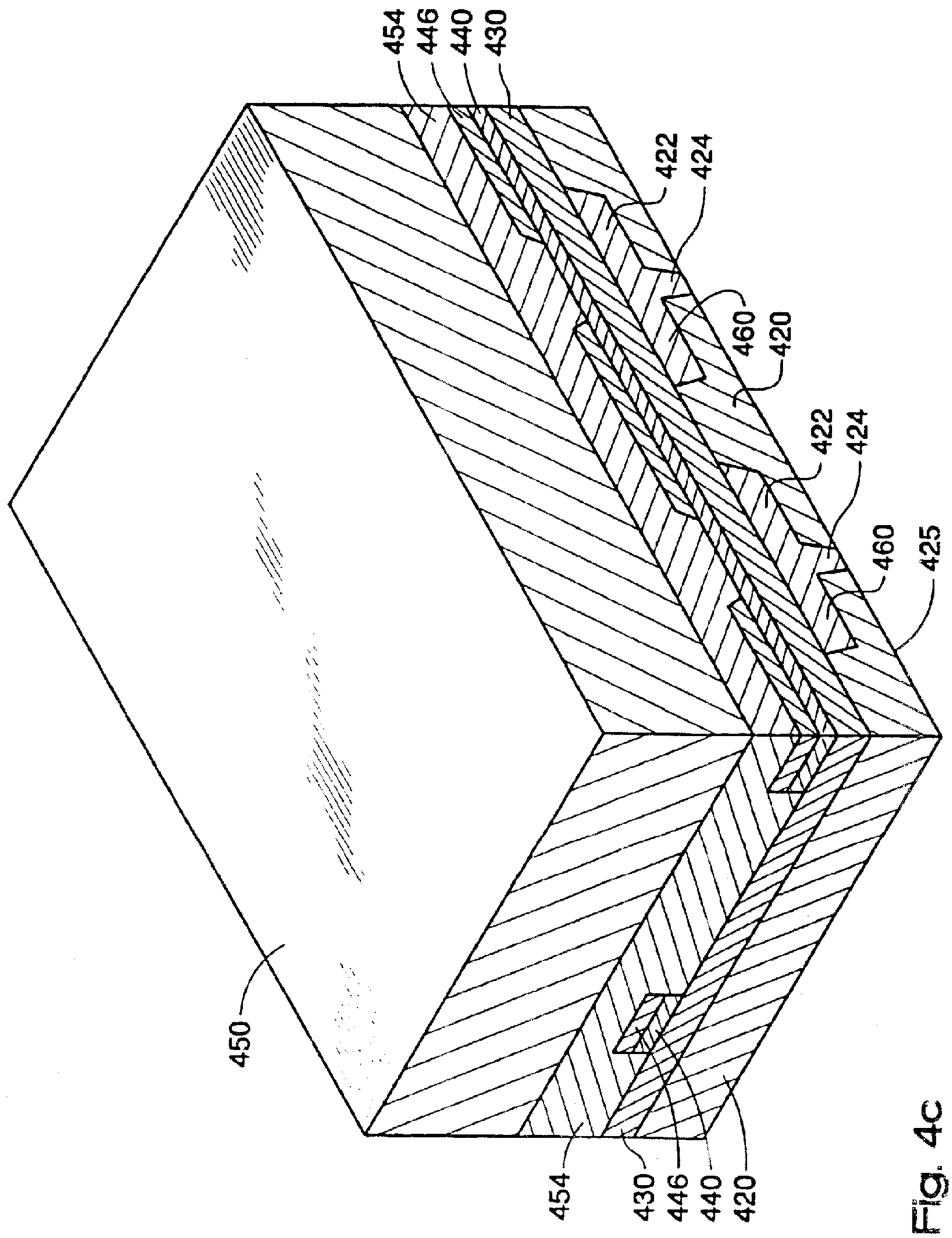
454
446
440
430
422
424
460
420
422
424
460
425
450
454
430
446
440
420

Fig. 4c

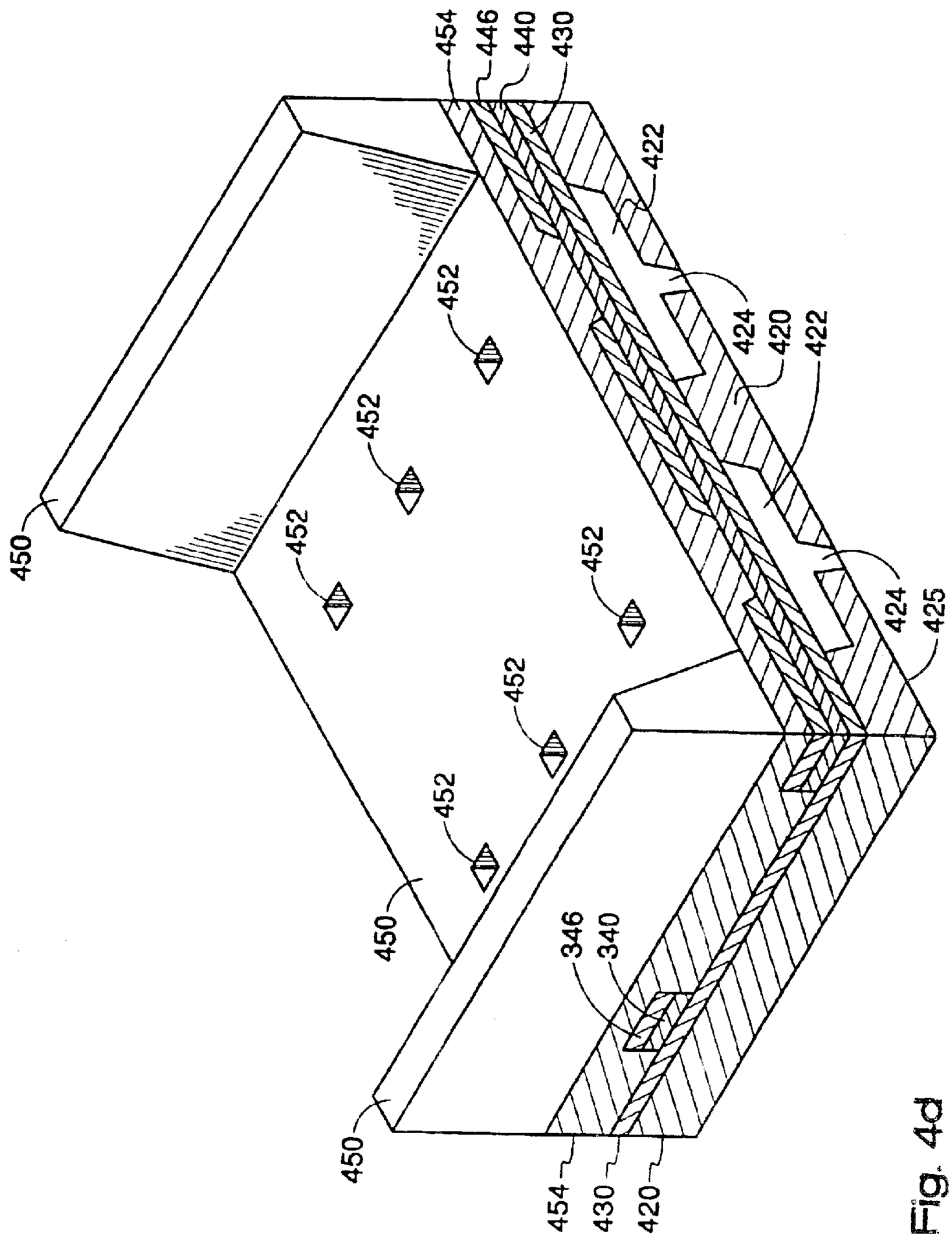
454
446
440
430
422
452
424
420
422
452
452
450
452
424
425
452
452
450
346
340
450
454
430
420

Fig. 4d

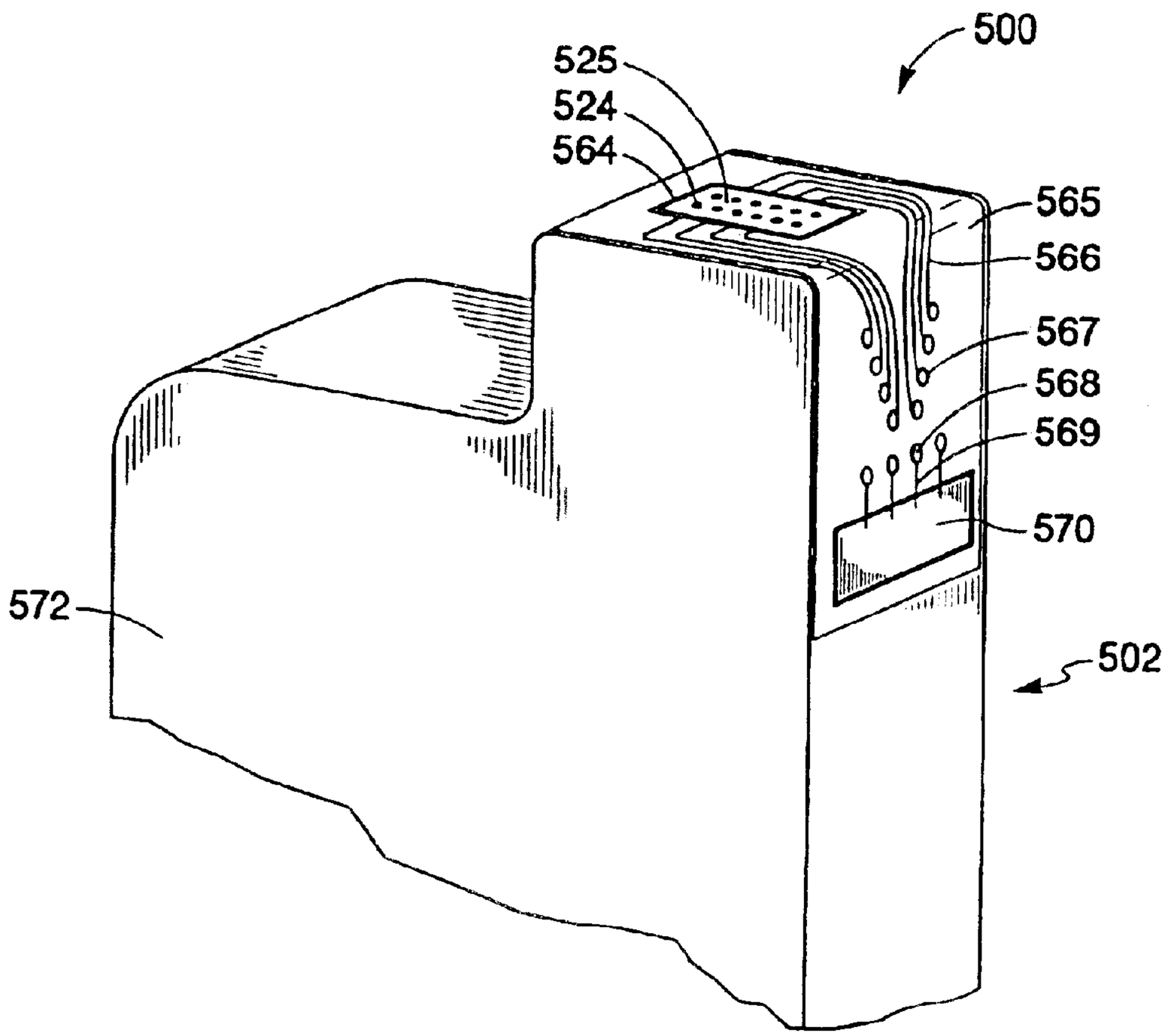

Fig. 5

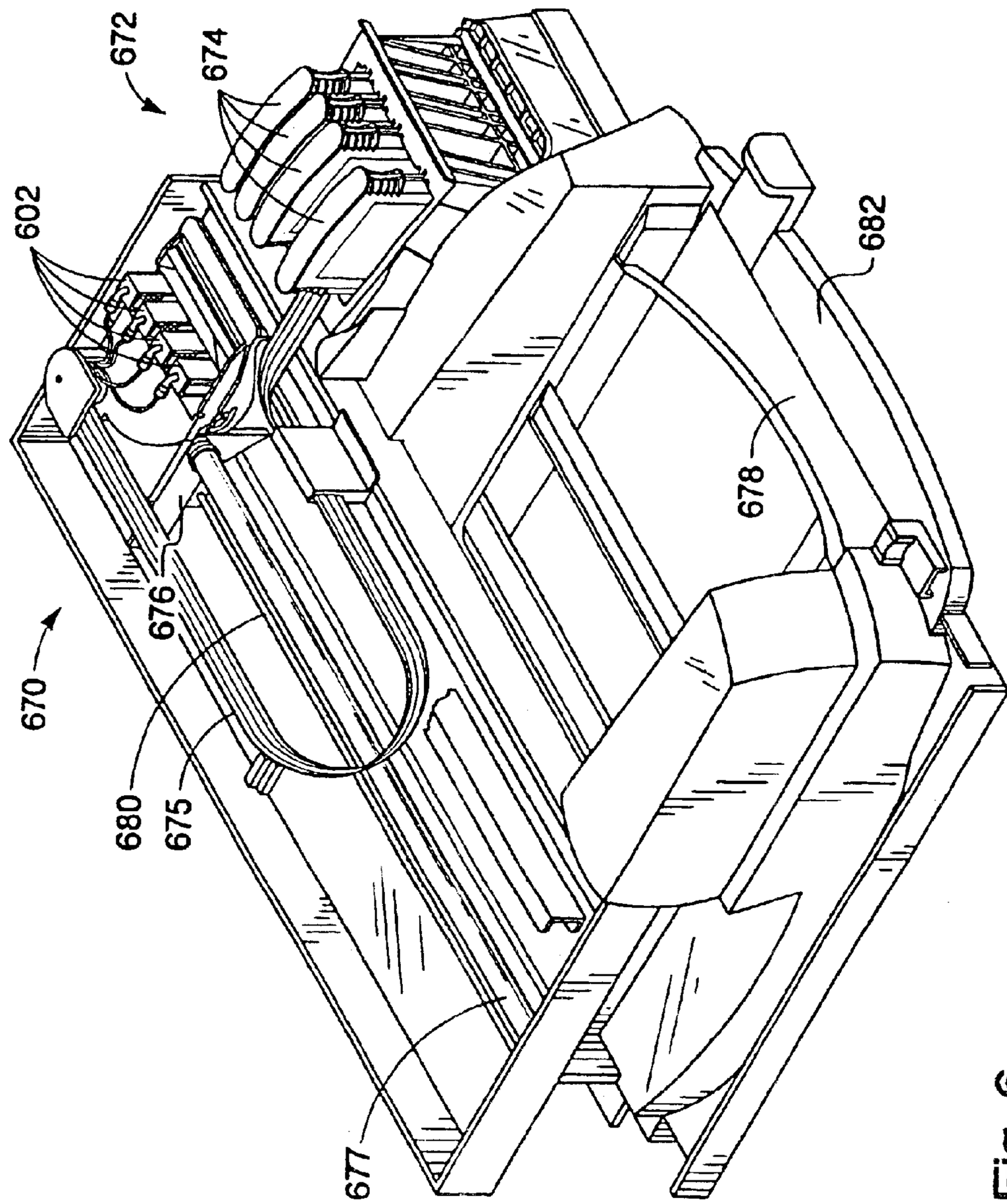

Fig. 6

FLUID EJECTOR HEAD HAVING A PLANAR PASSIVATION LAYER

This is a divisional of copending application Ser. No. 10/198,904, filed on Jul. 19, 2002, now U.S. Pat. No. 6,767,474, issued Jul. 27, 2004.

BACKGROUND

Description of the Art

Fluid ejection cartridges typically include a fluid reservoir that is fluidically coupled to a substrate. The substrate normally contains an energy-generating element that generates the force necessary for ejecting the fluid through one or more nozzles. Two widely used energy-generating elements are thermal resistors and piezoelectric elements. The former rapidly heats a component in the fluid above its boiling point creating a bubble causing ejection of a drop of the fluid. The latter utilizes a voltage pulse to move a membrane that displaces the fluid resulting in ejection of a drop of the fluid.

Currently there is a wide variety of highly efficient inkjet printing systems in use. These systems are capable of dispensing ink in a rapid and accurate manner. However there is also a demand by consumers for ever-increasing improvements in reliability and image quality, while providing systems at lower cost to the consumer. In an effort to reduce the cost and size of ink jet printers, and to reduce the cost per printed page, printers have been developed having small moving printheads that are typically connected to larger stationary ink supplies. This development is called "off-axis" printing, and has allowed the larger ink supplies, "ink cartridges," to be replaced as it is consumed without requiring the frequent replacement of the costly printhead, containing the fluid ejectors and nozzle system.

Improvements in image quality have typically led to an increase in the organic content of inkjet inks. This increase in organic content typically leads to inks exhibiting a more corrosive nature, potentially resulting in the degradation of the materials coming into contact with such inks. Degradation of these materials by more corrosive inks raises reliability and material compatibility issues. These material compatibility issues generally relate to all the materials the ink comes in contact with. However, they are exacerbated in the printhead because, in an off-axis system, the materials around the fluid ejectors and nozzles need to maintain their functionality over a longer period of time. This increased reliability is necessary to ensure continued proper functioning of the printhead, at least through several replacements of the ink cartridges. Thus, degradation of these materials can lead to potentially catastrophic failures of the printhead.

Improvements in image quality have also typically resulted in demand for printheads with fluid ejector heads capable of ejecting smaller fluid drops. Generally, this is accomplished by decreasing the size of the resistor as well as decreasing the size and thickness of the fluid chamber surrounding the resistor. In addition, the size and thickness of the orifice or bore, through which the fluid is ejected, is also typically reduced to eject smaller drops. A fluid ejector head is typically fabricated utilizing conventional semiconductor processing equipment. Typically, etching or removing a conductor material creating an area of higher resistance forms the thermal resistor. A dielectric passivation layer is then typically deposited over the conductors and the resistor to provide electrical isolation and environmental protection from degradation by the fluid located in the fluid chamber. As the resistors and chambers become smaller the ability to maintain thickness uniformity in the various layers, because

of step coverage issues, becomes more difficult. All of these problems can impact the manufacture of lower cost, smaller, and more reliable printer cartridges and printing systems.

BRIEF-DESCRIPTION OF THE DRAWINGS

FIG. **1** is a cross-sectional view of a fluid ejector head according to an embodiment of the present invention;

FIG. **2** is a cross-sectional isometric view of a fluid ejector head according to an alternate embodiment of the present invention;

FIG. **3***a* is a cross-sectional isometric view of a fluid definition layer of a fluid ejector head according to an embodiment of the present invention;

FIG. **3***b* is a cross-sectional isometric view of the fluid definition layer of a fluid ejector head seen in FIG. **3***a* after further processing according to an embodiment of the present invention;

FIG. **3***c* is a cross-sectional isometric view of the fluid ejector head seen in FIG. **3***b* after further processing according to an embodiment of the present invention;

FIG. **3***d* is a cross-sectional isometric view of the fluid ejector head seen in FIG. **3***c* after further processing according to an embodiment of the present invention;

FIG. **3***e* is a cross-sectional isometric view of the fluid ejector head seen in FIG. **3***d* after further processing according to an embodiment of the present invention;

FIG. **3***f* is a cross-sectional isometric view of the fluid ejector head seen in FIG. **3***e* after further processing according to an embodiment of the present invention;

FIG. **3***g* is a cross-sectional isometric view of the fluid ejector head seen in FIG. **3***f* after further processing according to an embodiment of the present invention;

FIG. **3***h* is a cross-sectional isometric view of the fluid ejector head seen in FIG. **3***g* after further processing according to an embodiment of the present invention;

FIG. **4***a* is a is a cross-sectional isometric view of a silicon wafer according to an embodiment of the present invention;

FIG. **4***b* is a cross-sectional isometric view of a silicon fluid definition layer of a fluid ejector head seen in FIG. **4***a* after further processing according to an embodiment of the present invention;

FIG. **4***c* is a cross-sectional isometric view of the fluid ejector head seen in FIG. **4***b* after further processing according to an embodiment of the present invention;

FIG. **4***d* is a cross-sectional isometric view of the fluid ejector head seen in FIG. **4***c* after further processing according to an embodiment of the present invention;

FIG. **5** is a perspective view of a fluid ejection cartridge according to an embodiment of the present invention;

FIG. **6** is a perspective view of a fluid ejection system according to an embodiment of the present invention.

DESCRIPTION OF THE PREFERRED EMBODIMENTS

Referring to FIG. **1**, an embodiment of the present invention is shown in a simplified cross-sectional view. In this embodiment, fluid ejector head **100** includes passivation layer **130**, having substantially planar opposed major surfaces. Passivation layer **130** provides environmental, mechanical, and electrical protection to resistor **142**. Fluid definition layer **120** includes chamber **122** and bore **124**, which extends from chamber surface **123** to exit surface **125**. Chamber **122** and bore **124**, in this embodiment, are filled

with sacrificial material **160** which is planarized to form substantially planar passivation surface **128** on fluid definition layer **120**. Passivation layer **130** is formed or deposited on passivation surface **128** formed on fluid definition layer **120** and sacrificial material **160**. In this embodiment, fluid definition layer **120** is silicon, however, in alternate embodiments, metals, inorganic dielectrics, and various polymers may also be utilized. For example, fluid definition layer **120** may be an electrochemically formed metal orifice plate containing bores **24** and chamber **122**. Another example of fluid definition layer **120** is a micro-molded plastic structure containing chamber **122** and bore **124**. Still another example is a polymer layer, such as a polyimide film, containing chamber **122** and bore **123** formed by chemically etching or laser ablation.

Fluid definition layer **120**, in this embodiment, has a thickness in the range from about 0.1 micrometers to about 10 micrometers. In alternate embodiments, fluid definition layer **120** may have a thickness in the range from about 0.25 micrometers to about 4.0 micrometers. Chamber **122**, in this embodiment, has an area in the plane formed by chamber surface **123** in the range from about 0.5 square micrometers to about 10,000 square micrometers. In this embodiment bore **124** has an area in the plane formed by exit surface **125** that is less than the area of bore **124** in the plane formed by chamber surface **124**.

It should be noted that the drawings are not true to scale. Certain dimensions have been exaggerated in relation to other dimensions in order to provide a dearer illustration and understanding of the present invention. In addition, for clarity not all lines are shown in each cross-sectional view. In addition, although some of the embodiments illustrated herein are shown in two-dimensional views with various regions having length and width, it should be understood that these regions are illustrations of only a portion of a device that is actually a three-dimensional structure. Accordingly, these regions will have three dimensions, including, length, width and depth, when fabricated on an actual device.

Passivation layer **130**, in this embodiment, is a dielectric material, such as silicon carbide (SiC_x), silicon nitride (Si_xN_y), silicon oxide (SiO_x), boron nitride (BN_x), or a polyimide to name a few. In this embodiment, passivation layer **130** has a thickness in the range from about 5.0 nanometers to about 200 nanometers. In alternate embodiments, passivation layer **130** may have a thickness in the range from about 5.0 nanometers to about 75 nanometers.

Resistive layer **140**, having substantially planar opposed major surfaces, is disposed over passivation layer **130** forming resistor **142**. In this embodiment, fluid ejector actuator **110** is thermal resistor **142** that utilizes a voltage pulse to rapidly heat a component in a fluid above its boiling point creating a bubble causing ejection of a drop of the fluid. In alternate embodiments, other fluid ejector generators such as piezoelectric, ultrasonic, or electrostatic generators may also be utilized. Resistive layer **140**, in this embodiment, has a thickness in the range from about 20 nanometers to about 400 nanometers. In alternate embodiments, resistive layer **140** may have a thickness in the range from about 50 nanometers to about 250 nanometers. Thermal resistor **142**, in this embodiment, has an area in the range from about 0.05 square micrometers to about 2,500 square micrometers. In particular resistors having an area in the range from about 0.25 square micrometers to about 900 square micrometers may be utilized. Electrical conductors **146** including beveled edges **148** are disposed over resistive layer **140**. Beveled edges **148** provide improved step coverage for substrate insulating layer **164**. Electrical conductors **146** have a thickness in the range from about 50 nanometers to about 500 nanometers.

In this embodiment, substrate insulating layer **154** is a silicon oxide layer. However, in alternate embodiments, other materials may also be utilized such as metals or polymers, depending on the particular substrate material used and the particular application in which fluid ejector head **100** will be used. Substrate insulating layer **154** has a thickness in the range from about 0.20 micrometers to about 2 micrometers. In particular thicknesses in the range from about 0.40 micrometers to about 0.75 micrometers can be utilized. In addition, fluid inlet channels (not shown) are formed in fluid ejector head **100** to provide a fluid path between a reservoir (not shown) and fluid ejector actuator **110**. In this embodiment, substrate **150** is a silicon wafer having a thickness of about 300–700 micrometers. In alternative embodiments, other materials may also be utilized for substrate **150**, such as, various glasses, aluminum oxide, polyimide substrates, silicon carbide, and gallium arsenide. Accordingly, the present invention is not-intended to be limited to those fluid ejector heads fabricated in silicon semiconductor materials.

Sacrificial layer **160** is removed by a selective etch that is selective to sacrificial material **160** and etches fluid definition layer **120**, substrate insulating layer **154**, and passivation layer **130** at a slower rate if at all. Fluid ejector head **100** described in the present invention can reproducibly and reliably eject drops in the range of from about one femtoliter to about ten nanoliters depending on the parameters and structures of the fluid ejector head such as the size and geometry of the chamber around the fluid ejector, the size and geometry of the fluid ejector, and the size and geometry of the nozzle. When fluid ejector actuator **110** is activated the fluid ejector head ejects essentially a drop of a fluid. Depending on the fluid being ejected as well as the parameters and structures of the fluid ejector what are commonly referred to as a tail and smaller satellite drops may be formed during the ejection process and are included in volume ejected.

An alternate embodiment is shown in a cross-sectional isometric view in FIG. **2**. In this embodiment, fluid definition layer **220** is a thick silicon oxide layer formed on bore support or support **218**, which is a silicon wafer. In alternate embodiments, fluid definition layer **220** and support **218** may be formed for example from metals, inorganic dielectrics, polymers and combinations thereof. Chamber **222** and bore **224** are formed in fluid definition layer **220**. However, in alternate embodiments, chamber **222** may be formed in a layer distinct from the layer that forms bore **224**. For example, bore **224** may be formed in an electroformed metal layer with chamber **222** formed in an epoxy layer coated on the electroformed metal layer. Another example would be forming bore **224** in a polyimide film and then forming chamber **222** in a silicon dioxide or metal layer deposited on the polyimide film. In addition, alternate embodiments, may have multiple bores formed in fluid definition layer **220** over chamber **222**.

Passivation layer **230** includes first dielectric layer **232** and second dielectric layer **234**. In this embodiment, first dielectric layer **232** is silicon carbide and second dielectric layer **234** is silicon nitride. However, in alternate embodiments, other inorganic dielectric or polymeric materials may also be utilized for first and second dielectric layers, as for example silicon oxide or polyimides. Resistive layer **240**, resistor **242**, electrical conductors **246**, and sub-

strate insulating layer **254** are similar to that described above and shown in FIG. **1**. Substrate **250** in this embodiment is a metal layer that provides environmental protection as well as thermal dissipation of heat generated when fluid ejector actuators **210** are activated. Fluid inlet channels **252** are formed in fluid ejector head **200** to provide a fluid path between a reservoir (not shown) and fluid ejector actuator **210**.

Referring to FIGS. **3***a*–**3***h* cross-sectional isometric views of a method of manufacturing a fluid ejector head according to an embodiment of the present invention is shown. FIG. **3***a* shows fluid definition layer **320**, which depending on the particular material utilized may have a support layer (See FIG. **2**), which will be described in greater detail later. FIG. **3***b* shows chambers **322** and bores **324** formed in fluid definition layer **320**, where bores **324** extend from chamber surface **323** to exit surface **325**. The process of forming chamber **322** and bore **324** depends on the particular material chosen to form fluid definition layer **320**. The particular material chosen will depend on parameters such as the fluid being ejected, the expected lifetime of the fluid ejector head, the dimensions of the chamber and fluidic feed channels among others. In addition, separate chamber and bore or orifice layers may also be utilized which may be formed from different materials. Generally, conventional photoresist and photolithography processing equipment are used or conventional circuit board processing equipment is utilized. In this embodiment fluid definition layer **320** is a single crystal silicon layer.

Chambers **322** and bores **324** are formed by masking fluid definition layer **320** with the appropriate mask and removing the material in the chambers and bores via either a wet or dry etch chemistry. For example a dry etch may be used when vertical or orthogonal sidewalls are desired. Another example is the use of a wet etch such as tetra methyl ammonium hydroxide (TMAH) when sloping sidewalls are desired. In addition, combinations of wet and dry etch may also be utilized when more complex structures are utilized for the chamber and bore. Other processes such as laser ablation, reactive ion etching, ion milling including focused ion beam patterning may also be utilized to form chambers **322** and bores **324**. Other materials such as silicon oxide or silicon nitride may also be utilized, using deposition tools such as sputtering or chemical vapor deposition and photolithography tools for patterning. Micromolding, electroforming, punching, or chemical milling are all examples of techniques that may also be utilized depending on the particular materials utilized for fluid definition layer **320**.

As noted above different materials may also be utilized to form an orifice or bore layer and a chamber layer. The chamber layer defines the sidewalls of the chamber and the orifice layer defines the bore and forms the top of the chamber. For example, the processes used to form a photoimagable polyamide orifice layer would be spin coating the polyimide on a bore support layer such as a silicon or metal wafer, followed by soft baking, expose, develop, and subsequently a final bake process. A chamber layer can then be formed utilizing the same or a similar polyimide as that used to form the bore. The chamber layer may also be formed utilizing a different material such as photoimagable epoxy. Another example would be utilizing what is generally referred to as a solder mask, to form either the chamber or bore, or both. Typically a solder mask utilizes a lamination process to adhere the material to a bore support layer, and the remaining steps would be those typically utilized in photolithography. A further example would be to form the bore layer by electroforming techniques, and then spin coat or laminate a chamber layer material on the bore layer. In addition to utilizing different materials for the bore layer and chamber layer, different techniques for creating the bore and chamber may also be utilized such as laser ablation to form the nozzle and photolithographically forming the chamber.

FIG. **3***c* shows planarized sacrificial layer or "lost wax" **360** suitably filling chambers **322** and bores **324**. In this embodiment, sacrificial layer is a phosphorus doped spin on glass (SOG) spin coated onto fluid definition layer **320** after chambers **322** and bores **324** have been formed. Sacrificial material **360** is planarized, for example, by mechanical, resist etch-back, or chemical-mechanical processes, to form substantially planar passivation surface **328**. Sacrificial material **360** may be any material that is differentially etchable to the surrounding structures such as the chamber and bore.

Passivation layer **330**, resistive layer **340** and electrically conductive layer **345** are all formed over passivation surface **328** as shown in FIG. **3***d*. In this embodiment, passivation layer **330** includes cavitation layer **336**, first dielectric layer **332** and second dielectric layer **334**. Cavitation layer **336**, in this embodiment, is a tantalum layer; however, in other embodiments cavitation layer may be any inorganic or organic material that has the appropriate environmental, crack and fatigue resistant properties, depending on the particular application in which the fluid ejector head will be used. First dielectric layer **332** and second dielectric layer **334**, in this embodiment, are a silicon carbide layer, and a silicon nitride layer respectively. Depending on the particular application in which the fluid ejector head will be utilized any inorganic dielectric may be utilized. The particular material chosen will depend on parameters such as the fluid being ejected, the expected lifetime of the fluid ejector head, the dimensions of the chamber and fluidic feed channels among others. In this embodiment, cavitation layer **336**, first dielectric layer **332**, and second dielectric layer **334** have a thickness in the range from about 2.5 nanometers to about 200 nanometers.

Resistive layer **340**, in this embodiment, is a tantalum aluminum alloy. In alternate embodiments, resistor alloys such-as tungsten silicon nitride, or polysilicon may also be utilized. In other alternative embodiments, fluid drop actuators other than thermal resistors, such, as piezoelectric, or ultrasonic may also be utilized. Electrically conductive layer **345**, in this embodiment, is an aluminum copper silicon alloy. In other alternative embodiments, other interconnect materials commonly used in integrated circuit or printed circuit board technologies, such as other aluminum alloys, gold, or copper, may be utilized to form electrically conductive layer **345**.

The process of creating passivation layer **330**, resistive **340**, and electrically conductive layer **345** utilizes conventional semiconductor processing equipment, such as sputter deposition systems, or chemical vapor deposition (CVD) systems for forming the layers. However, other techniques such as electron beam or thermal evaporation, plasma enhanced CVD, electroplating, or electroless deposition, may also be utilized separately or in combination with sputter deposition or CVD to form the layers depending on the particular materials utilized.

Resistors **342** and electrical conductors **346** are formed utilizing conventional semiconductor or printed circuit board processing equipment. In this embodiment, what is generally referred to as a subtractive process is used for defining or etching the location and shape of resistors **342**

and electrical conductors or traces **346** as shown in FIG. **3***e*. Although a subtractive process is shown an additive process, where material is selectively deposited rather than removed, may also be utilized to form resistors **342** and electrical traces **346**. Generally a slope metal etch may also be utilized in forming electrical conductors **346** to provide better step coverage for depositing or forming substrate insulating layer **354** as shown in FIG. **3***f*. Substrate insulating layer **354** serves to electrically isolate electrical conductors **346** and resistors **342** when an electrically conductive substrate such as silicon or a metal is utilized. In addition substrate insulating layer **354** also provides mechanical and environmental protection of resistors **342**. In this embodiment, substrate insulating layer **354** is silicon oxide, in particular it is a silicon dioxide. However, depending on the particular materials utilized in the other layers such as fluid definition layer **320**, first and second dielectric layers **332**, and **334**, various inorganic and polymeric dielectric materials also may be utilized.

Fluid inlet channels **352** providing fluidic coupling of a reservoir (not shown) to chamber **322** is shown in FIG. **3***g*. In this embodiment fluid inlet channels are formed in substrate insulating layer **354**, conductive layer **346**, resistive layer **340**, and passivation layer **330**. In an alternate embodiment, fluid inlet channels are formed in substrate insulating layer **354** and first and second dielectric layers **332** and **334**. The particular layers in which fluid inlet channels are formed in depends on parameters such as the fluid being ejected, the expected lifetime of the fluid ejector head, the dimensions of the chamber and fluidic feed channels among others.

FIG. **3***h* illustrates the result of the removal of the "lost wax" or sacrificial material **360**, seen in FIGS. **3***c*. FIG. **3***h* shows chambers **322** and bores **324** as voids with passivation layer **330**, having substantially planar opposed major surfaces, forming the bottom of chambers **322**. Sacrificial material **360** is removed by a selective etch that is selective to sacrificial material **360** and etches fluid definition layer **320**, substrate insulating layer **354**, and passivation layer **330** at a slower rate if at all. An etchant for this purpose, for phsphorus doped SOG, can be a buffered oxide etch that is essentially hydrofluoric acid and ammonium chloride. For an aluminum sacrificial material sulfuric peroxide or sodium hydroxide can be utilized.

Referring to FIGS. **4***a*–**4***d* cross-sectional isometric views of an alternate method of manufacturing a fluid ejector head according to an embodiment of the present invention is shown. FIG. **4***a* shows silicon wafer **456** including fluid definition layer **420** formed in silicon wafer **456** utilizing ion implantation. In particular hydrogen ion implantation may be used. In this embodiment, fluid definition layer **420** is a crystalline silicon layer. The ion implantation process produces separation interface **458**. In this embodiment, separation interface **458** is an implanted region that provides a cleavable surface or interface to separate fluid definition layer **420** from bore support **418**. In alternate embodiments, separation interface **458** may be formed by creating a sacrificial layer between fluid definition layer **420** and support **418**. In those embodiments that utilize a sacrificial layer for separation interface **458**, fluid definition layer **420** is separated from support **418** by utilizing a selective etch similar to that described above for the sacrificial material utilized in the chambers and bores. FIG. **4***b* shows chambers **422** and bores **424** formed in fluid definition layer **420**. The process of forming chamber **422** and bore **424** will depend on, parameters such as the fluid being ejected, the expected lifetime of the fluid ejector head, the dimensions of the chamber and fluidic feed channels among others. Processes similar to those described above may be utilized.

FIG. **4***c* shows the various layers such as protective layer **430**, sacrificial layer **460**, resistive layer **440** and conductive layer **446** formed on fluid definition layer **420** as previously described above. In this embodiment, substrate **450** is a silicon wafer bonded to substrate insulating layer **454**, a silicon oxide layer, utilizing conventional bonding processes such as for example anodic bonding or fusion bonding. Exit surface **425** is formed by cleaving silicon wafer **456** at separation interface **458**. In other embodiments exit surface **425** may be formed, for example, by mechanical grinding or polishing, chemical etching, or dissolution of a sacrificial layer to name a few processes. FIG. **4***d* illustrates the result of the removal of sacrificial layer **460** seen in FIG. **4***c*. Chambers **422** and bores **424** ar shown as voids with passivation layer **430**, having substantially planar opposed major surfaces, forming the bottom of chambers **422**. Silicon substrate **450** is etched to provide access to fluid inlet channels **452**.

Referring to FIG. **5**, an exemplary embodiment of a fluid ejection cartridge **502** of the present invention is shown in a perspective view. In this embodiment, fluid ejection cartridge **502** includes reservoir **572** that contains a fluid, which is supplied to a substrate fluid ejector actuators (not shown) and fluid ejection chamber (not shown). Exit surface **525** of fluid ejector head **500** contains one or more bores or nozzles **524** through which fluid is ejected. Fluid ejector head **500** can be any of the fluid ejector heads described above.

Flexible circuit **565** of the exemplary embodiment is a polymer film and includes electrical traces **566** connected to electrical contacts **567**. Electrical traces **566** are routed from electrical contacts **567** to electrical connectors or bond pads on the substrate (not shown) to provide electrical connection for the fluid ejection cartridge **502**. Encapsulation beads **564** are dispensed along the edge of exit surface **525** and the edge of the substrate enclosing the end portion of electrical traces **566** and the bond pads on the substrate.

Information storage element **570** is disposed on fluid ejection cartridge **502**. In this embodiment information storage element **570** is electrically coupled to flexible circuit **565**. Information storage element **570** is any type of memory device suitable for storing and outputting information that may be related to properties or parameters of the fluid or fluid ejector head **500**. In this embodiment, information storage element **570** is a memory chip mounted to flexible circuit **565** and electrically coupled through storage electrical traces **569** to storage electrical contacts **568**. Alternatively, information storage element **570** can be encapsulated in its own package with corresponding separate electrical traces and contacts. When fluid ejection cartridge **502** is either inserted into or utilized in, a fluid dispensing system, information storage element **570** is electrically coupled to a controller (not shown) that communicates with information storage element **570** to use the information or parameters stored therein.

Referring to FIG. **6**, a perspective view is shown of an exemplary embodiment of a fluid ejection system of the present invention. As shown fluid ejection system **670** includes fluid or ink supply **672**, including one or more secondary fluid or ink reservoirs **674**, commonly referred to as fluid or ink cartridges, that provide fluid to one or more fluid ejection cartridges **602**. Fluid ejection cartridges **602** are similar to fluid ejection cartridge **502**, however, other fluid ejection cartridges may also be utilized. Secondary fluid reservoirs **674** are fluidically coupled to fluid ejection

cartridges via flexible conduit **675**. Fluid ejection cartridges **602** may be semi-permanently or removably mounted to carriage **676**. Fluid ejection cartridges **602** are electrically coupled to a drop firing controller (not shown) and provide the signals for activating the fluid ejector generators on the fluid ejection cartridges. In this embodiment, a platen or sheet advancer (not shown) to which receiving or print medium **678**, such as paper or a fluid receiving sheet, is transported by mechanisms that are known in the art. Carriage **676** is typically supported by slide bar **677** or similar mechanism within fluid ejection system **670** and physically propelled along slide bar **677** to allow carriage **676** to be translationally reciprocated or scanned back and forth across sheet **678**. Fluid ejection system **670** may also employ coded strip **680**, which may be optically detected by a photodetector (not shown) in carriage **676** for precise positioning of the carriage. Carriage **676** may be translated, preferably, using a stepper motor (not shown), however other drive mechanism may also be utilized. In addition, the motor may be connected to carriage **676** by a drive belt, screw drive, or other suitable mechanism.

When a printing operation is initiated, print medium **678** in tray **682** is fed into a fluid ejection area (not shown) of fluid ejection system **680**. Once receiving medium **678** is properly positioned, carriage **676** may traverse receiving medium **678** such that one or more fluid ejection cartridges **602** may eject fluid onto receiving medium **678** in the proper position on various portions of receiving medium **678**. Receiving medium **678** may then be moved incrementally, so that carriage **676** may again traverse receiving medium **678** allowing the one or more fluid ejection cartridges **602** to eject ink onto a new position or portion that is non-overlapping with the first portion on receiving medium **678**. Typically, the drops are ejected to form predetermined dot matrix patterns, forming for example images or alphanumeric characters.

Rasterization of the data can occur in a host computer such as a personal computer or PC (not shown) prior to the rasterized data being sent, along with the system control commands, to the system, although other system configurations or system architectures for the rasterization of data are possible. This operation is under control of system driver software resident in the system's computer. The system interprets the commands and rasterized data to determine which drop ejectors to fire. Thus, when a swath of fluid deposited onto receiving medium **678** has been completed, receiving medium **678** is moved an appropriate distance, in preparation for the next swath. In this manner a two dimensional array of fluid ejected onto a receiving medium may be obtained. This invention is also applicable to fluid dispensing systems employing alternative means of imparting relative motion between the fluid ejection cartridges and the receiving medium, such as those that have fixed fluid ejection cartridges and move the receiving medium in one or more directions, and those that have fixed receiving media and move the fluid ejection cartridges in one or more directions.

While the present invention has been particularly shown and described with reference to the foregoing preferred and alternative embodiments, those skilled in the art will understand that many variations may be made therein without departing from the spirit and scope of the invention as defined in the following claims. This description of the invention should be understood to include all novel and non-obvious combinations of elements described herein, and claims may be presented in this or a later application to any novel and non-obvious combination of these elements. The foregoing embodiments are illustrative, and no single feature or element is essential to all possible combinations that may be claimed in this or a later application.

What is claimed is:

1. A fluid ejector head, comprising:

a fluid definition layer defining a chamber, said fluid definition layer having a substantially planar passivation surface;

a sacrificial material, filling said chamber, said sacrificial material is planarized to the plane formed by said passivation surface;

a passivation layer, having substantially planar opposed major surfaces, formed on said planar passivation surface; and

a resistive layer having substantially planar opposed major surfaces in contact with said passivation layer.

2. The fluid ejector head in accordance with claim **1**, further comprising an electrical conductor electrically coupled to said resistive layer.

3. The fluid ejector head in accordance with claim **2**, further comprising a substrate disposed over said passivation layer, and said electrical conductor.

4. The fluid ejector head in accordance with claim **1**, further comprising a substrate insulating layer disposed over said passivation layer, said resistive layer, and said electrical conductor.

5. The fluid ejector head in accordance with claim **1**, wherein said fluid definition layer is silicon or silicon oxide.

6. The fluid ejector head in accordance with claim **1**, further comprising fluid inlet channels formed in said substrate and fluidically coupled to said chamber.

7. The fluid ejector head in accordance with claim **1**, wherein the chamber has an area in the plane formed by said passivation surface in the range from about 0.5 square micrometer to about 10,000 square micrometers.

8. The fluid ejector head in accordance with claim **1**, wherein said fluid definition layer further defines a bore.

9. The fluid ejector head in accordance with claim **8**, wherein said bore extends from an exit surface to a chamber surface.

10. The fluid ejector head in accordance with claim **9**, wherein said bore has an area, in the plane formed by said exit surface, less than the area of said bore in the plane formed by said chamber surface.

11. The fluid ejector head in accordance with claim **8**, wherein said fluid definition layer further comprises multiple bores disposed over said chamber.

12. The fluid ejector head in accordance with claim **1**, wherein said resistive layer forms at least one fluid ejector actuator.

13. The fluid ejector head in accordance with claim **12**, wherein said at least one fluid ejector actuator has an area in the range from about 0.05 square micrometers to about 2,500 square micrometers.

14. The fluid ejector head in accordance with claim **12**, wherein when said at least one fluid ejector actuator is activated the fluid ejector head ejects essentially a drop of a fluid, and the volume of the fluid, of essentially said drop, is in the range of from about one femtoliter to about a 10 nanoliters.

15. The fluid ejector head in accordance with claim **1**, wherein said resistive layer is from about 20 nanometers to about 400 nanometers thick.

16. The fluid ejector head in accordance with claim **1**, wherein said passivation layer further comprises:

a first dielectric layer disposed over said fluid definition layer; and

a second dielectric layer disposed over said first dielectric layer.

17. The fluid ejector head in accordance with claim **16**, wherein said first dielectric layer includes silicon carbide and said second dielectric layer includes silicon nitride.

18. The fluid ejector head in accordance with claim **1**, wherein said passivation layer farther comprises a cavitation layer.

19. The fluid ejector head in accordance with claim **18**, wherein said cavitation layer includes tantalum.

20. The fluid ejector head in accordance with claim **1**, wherein said fluid definition layer further comprises:

a chamber layer defining sidewalls of said chamber; and

an orifice layer defining a bore disposed on said chamber layer.

21. The fluid ejector head in accordance with claim **1**, wherein said passivation layer has a thickness in the range from about 5.0 nanometers to about 200 nanometers.

22. The fluid ejector head in accordance with claim **1**, wherein said fluid definition layer has a thickness in the range from about 0.1 micrometers to about 10 micrometers.

23. A fluid ejection cartridge comprising:

at least one fluid ejector head of claim **1**; and

at least one fluid reservoir fluidically coupled to said at least one fluid ejector head.

24. A fluid ejection cartridge in accordance with claim **23**, further comprising an information storage element coupled to a controller having at least one parameter of a fluid that is communicable to a controller.

25. A fluid ejection cartridge in accordance with claim **23**, wherein said information storage element further comprises at least one parameter of said at least one fluid ejector head that is communicable to a controller.

26. A fluid dispensing system comprising:

at least one fluid ejection cartridge of claim **23**;

a drop-firing controller for activating at least one fluid ejector actuator of said at least one fluid ejector head, wherein activation of said at least one fluid ejector ejects at least one drop of a fluid onto a first portion of a fluid receiving medium; and

a receiving medium advancer for advancing said receiving medium, wherein said receiving medium advancer and said drop-firing controller cooperate to dispense said fluid on a second portion of the receiving medium.

27. A fluid dispensing system in accordance with claim **26**, wherein said first portion and said second portion are non-overlapping.

28. A fluid dispensing system in accordance with claim **26**, wherein said sheet advancer and said drop-firing controller dispense said fluid in a two dimensional array onto said first portion of said receiving medium.

29. A fluid dispensing system in accordance with claim **26**, wherein said sheet advancer and said drop-firing controller are capable of dispensing said fluid in a two dimensional array on said second portion of said receiving medium.

30. A fluid ejector head manufactured in accordance with the steps comprising:

forming a chamber in a fluid definition layer, said fluid definition layer having a substantially planar passivation surface;

filling said chamber with a sacrificial material;

planarizing said sacrificial material to the plane formed by said passivation surface;

forming a passivation layer, having substantially planar opposed major surfaces, on said substantially planar passivation surface of said fluid definition layer; and

removing said sacrificial layer within said fluid definition layer.

31. A method of manufacturing a fluid ejection cartridge comprising:

manufacturing at least one fluid ejector head in accordance with claim **30**; and

creating at least one fluid reservoir fluidically coupled to said at least one fluid ejector head.

32. A fluid ejector head comprising:

a means for forming a fluid definition layer defining a chamber and a bore, said chamber having a substantially planar passivation surface;

a means for forming a passivation layer having substantially planar opposed surfaces disposed on said passivation surface of said fluid definition layer; and

a means for forming a resistive layer in contact with said passivation layer.

33. The fluid ejector head in accordance with claim **32**, further comprising:

a means for electrically coupling to said resistive layer; and

a means for forming a substrate disposed over said passivation layer and said resistive layer.

34. A fluid ejector head comprising:

a chamber formed in a fluid definition layer, said fluid definition layer having a substantially planar passivation surface;

a sacrificial material, filling said chamber, said sacrificial material planarized to the plane formed by said substantially planar passivation surface;

a passivation layer disposed on said substantially planar passivation surface, said passivation layer having substantially planar opposed major surfaces; and

a resistive layer disposed on and in contact with said passivation layer, said resistive layer having substantially planar opposed major surfaces.

* * * * *