US006554510B1

(12) **United States Patent**
Hayashi et al.

(10) **Patent No.: US 6,554,510 B1**
(45) **Date of Patent: Apr. 29, 2003**

(54) **PRINTING AID, ASSEMBLY JIG THEREFOR, AND RECORDING DEVICE**

(75) Inventors: **Takayuki Hayashi**, Shimosuwa-machi (JP); **Nobuaki Nagae**, Chino (JP); **Hiroyuki Kusumoto**, Suwa (JP); **Noriyuki Komatsu**, Okaya (JP)

(73) Assignee: **Seiko Epson Corporation**, Tokyo (JP)

(*) Notice: Subject to any disclaimer, the term of this patent is extended or adjusted under 35 U.S.C. 154(b) by 0 days.

(21) Appl. No.: **09/787,733**

(22) PCT Filed: **Jun. 9, 2000**

(86) PCT No.: **PCT/JP00/03798**

§ 371 (c)(1),
(2), (4) Date: **Mar. 20, 2001**

(87) PCT Pub. No.: **WO01/07263**

PCT Pub. Date: **Feb. 1, 2001**

(30) **Foreign Application Priority Data**

Jul. 23, 1999 (JP) 11-209315

(51) **Int. Cl.**[7] **B41J 13/26**; B41J 13/32
(52) **U.S. Cl.** **400/578**; 101/44
(58) **Field of Search** 400/521, 522, 400/622, 578; 101/44; 428/84, 131, 134, 136, 192; 229/314, 69; 269/287, 288

(56) **References Cited**

U.S. PATENT DOCUMENTS

1,799,374	A	*	4/1931	Hurley	101/369
4,133,613	A		1/1979	Webster	400/616.3
4,487,645	A		12/1984	Weston	156/157
4,636,099	A	*	1/1987	Goldstone	229/68.1
4,790,475	A	*	12/1988	Griffin	206/820
5,008,700	A	*	4/1991	Okamoto	355/401
5,456,169	A		10/1995	Robwetter et al.	101/35
6,158,909	A	*	12/2000	McCue et al.	347/104

FOREIGN PATENT DOCUMENTS

DE	1 561 246		3/1970	
GB	2 092 994		8/1982	
JP	58-147059		10/1983	
JP	59-209167		11/1984	
JP	62-70944		5/1987	
JP	62-73952		5/1987	
JP	04239672	A *	8/1992	B41J/13/10
JP	6-297788		10/1994	
JP	9-11562		1/1997	
JP	11254657	A *	9/1999	B41J/2/01

OTHER PUBLICATIONS

Tucker, Archie J., "Slide Adapter," Apr. 1974, Defensive Publication, United States Patent Office, T921,013.*

* cited by examiner

Primary Examiner—Daniel J. Colilla
(74) *Attorney, Agent, or Firm*—Michael T. Gabrik

(57) **ABSTRACT**

A printing aid includes a printing position-determining member **22** for determining a position of a material to be printed **30** on a printing position of a printer device, and a placement member for material to be printed **21** for placing the material to be printed at a portion corresponding to the printing position determined by the printing position-determining member. This makes it possible to print on various types of materials to be printed with the printer device.

21 Claims, 10 Drawing Sheets

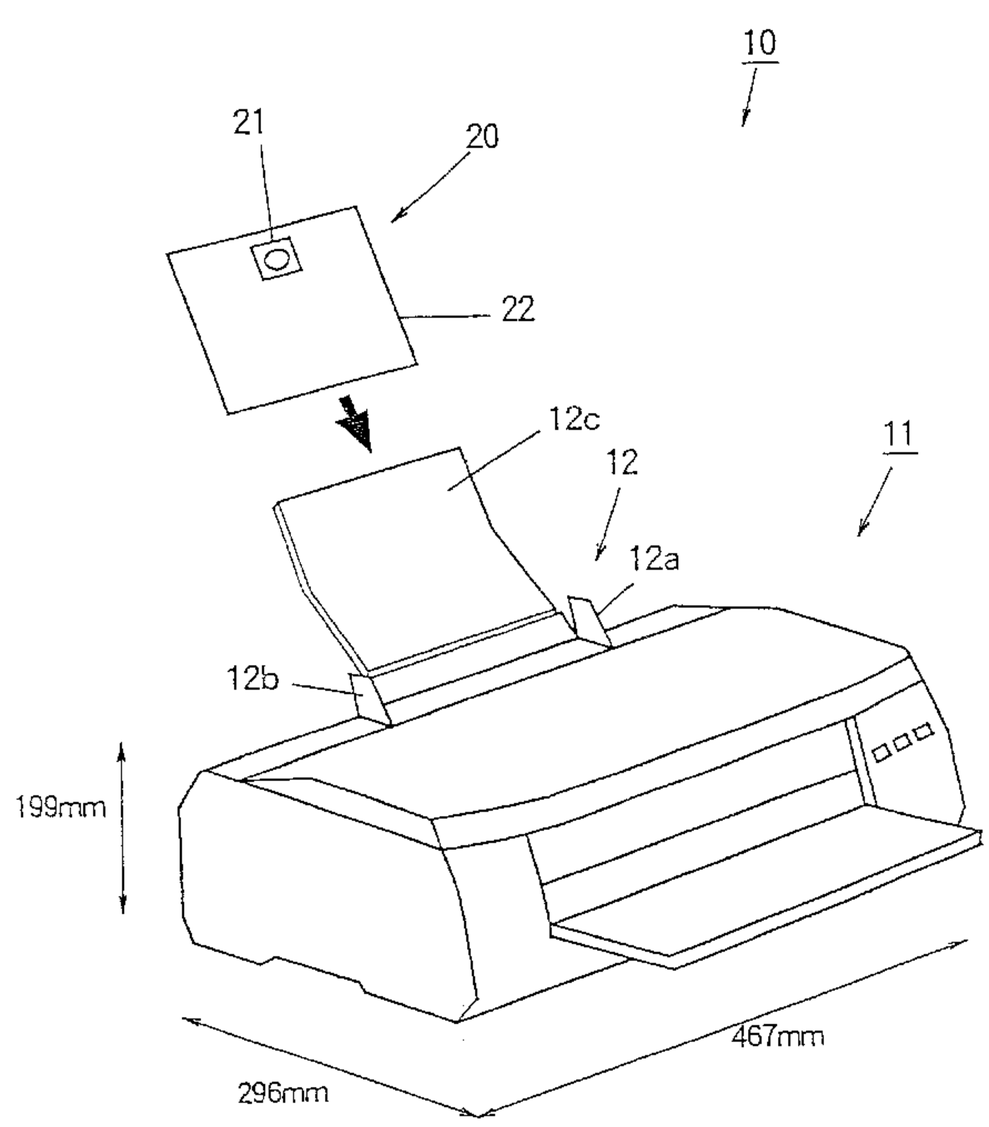

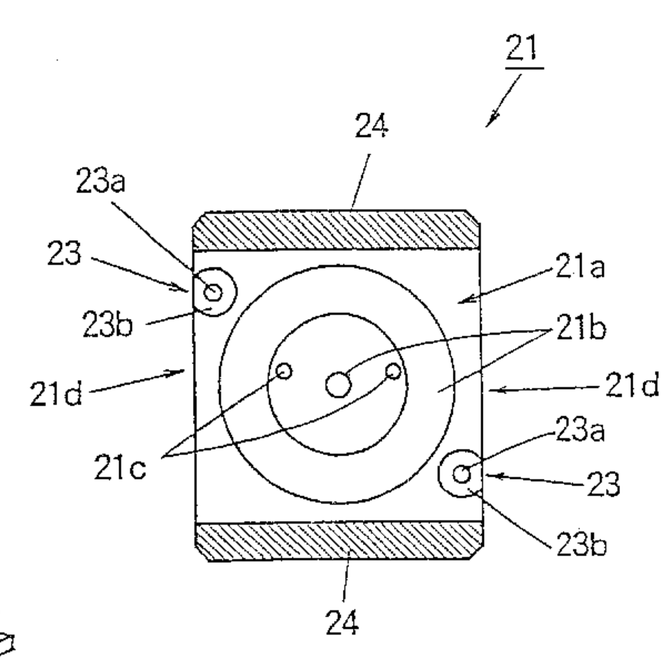

Fig. 1

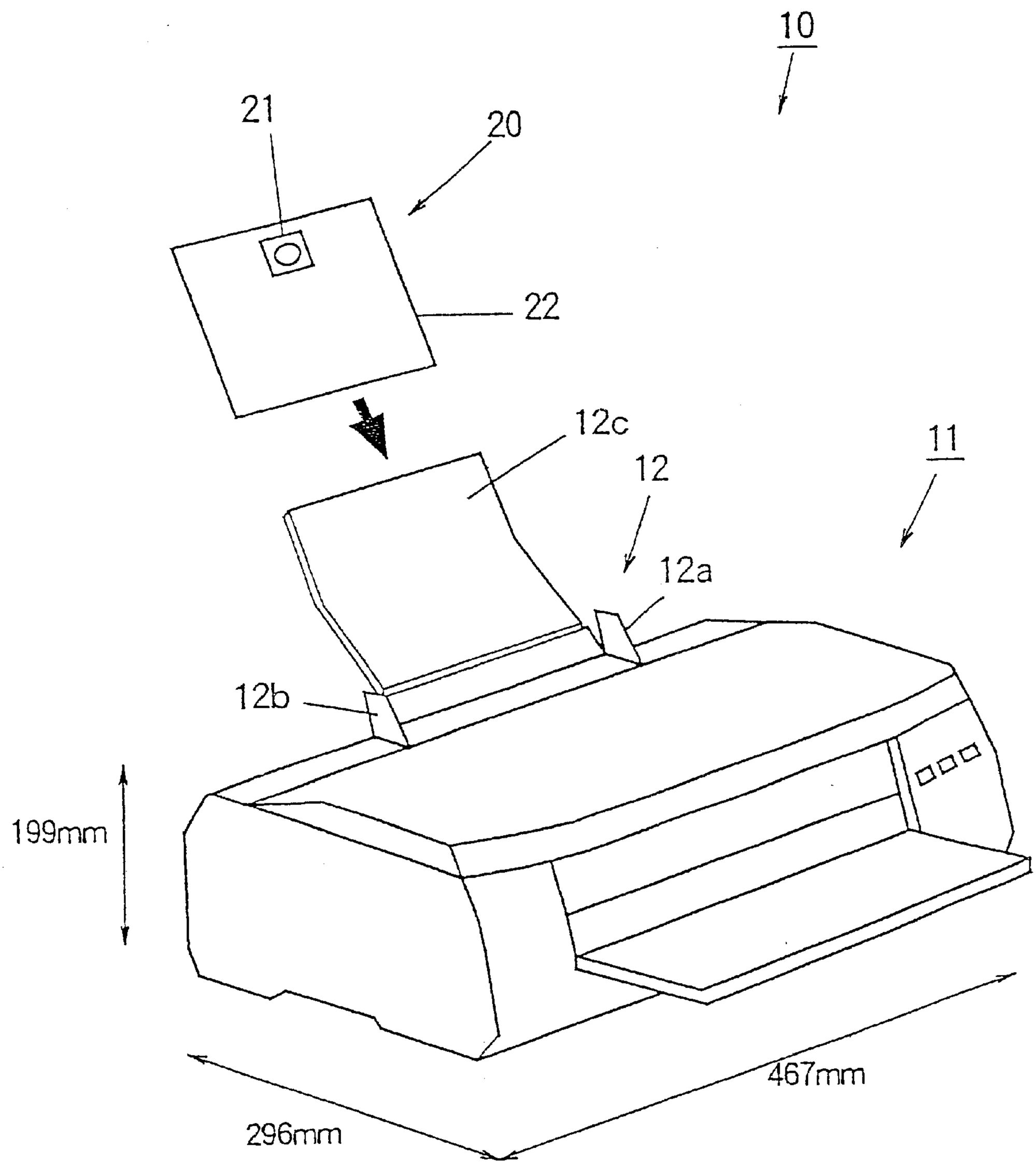

Fig. 2

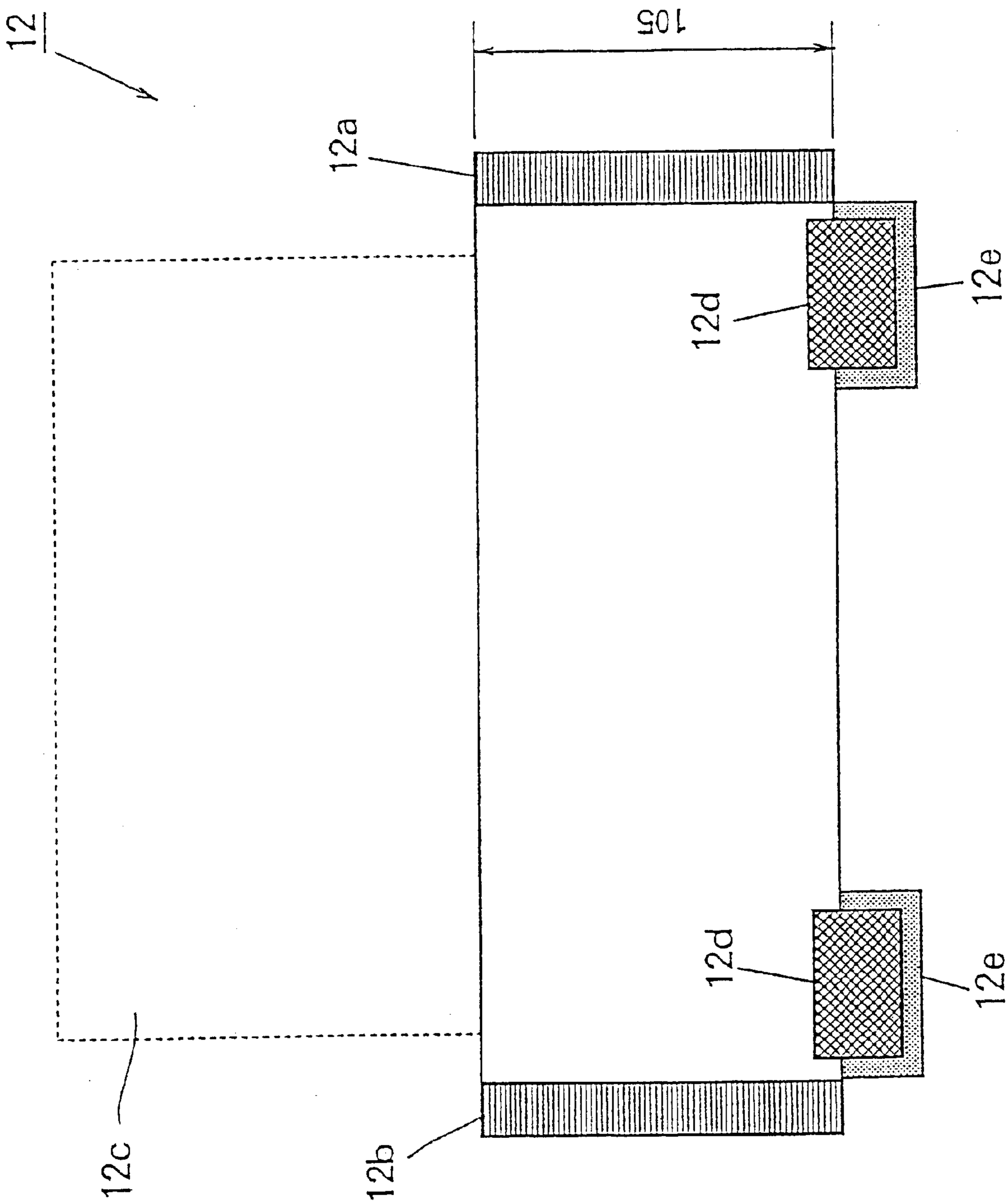

Fig. 3

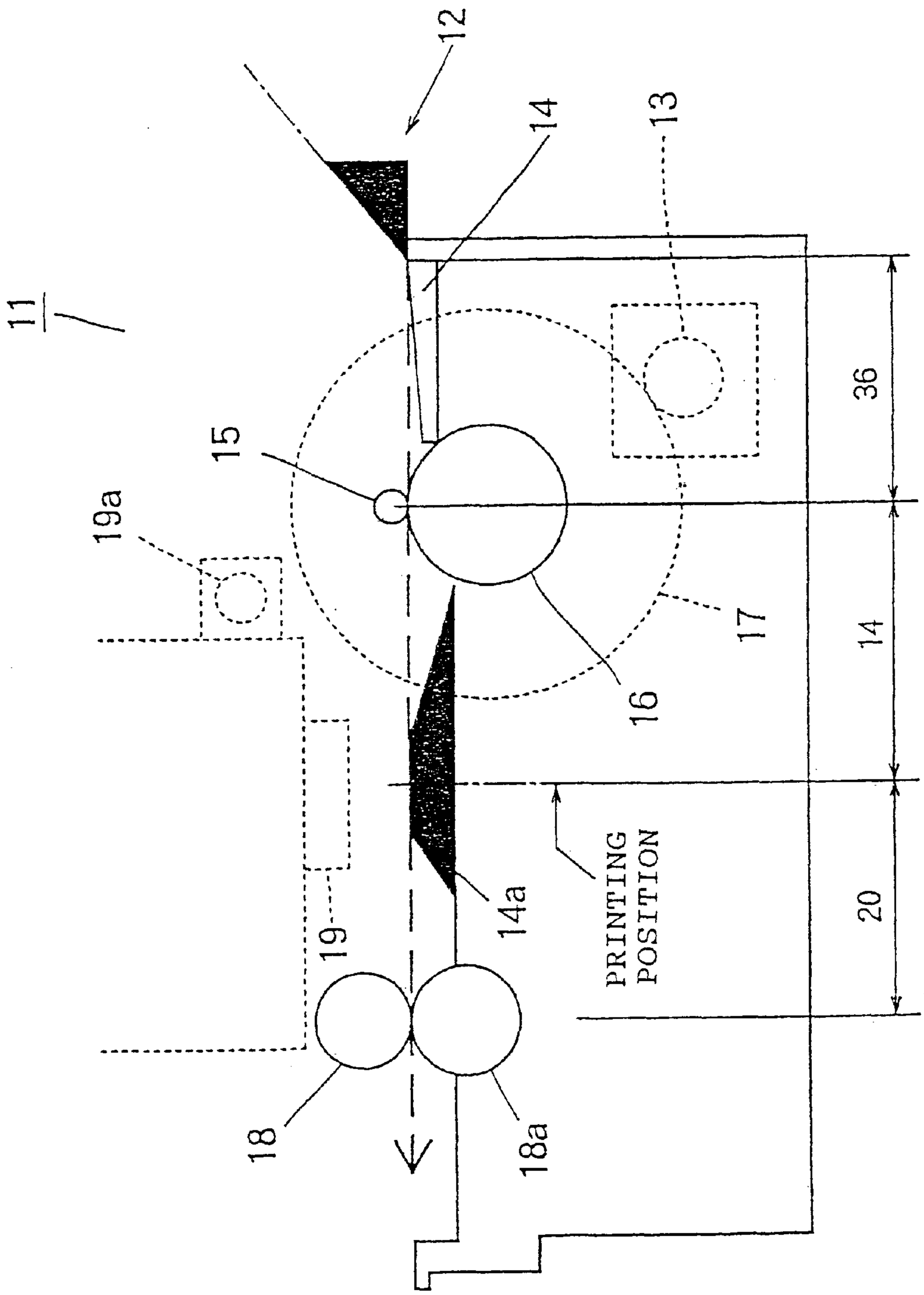

Fig. 4

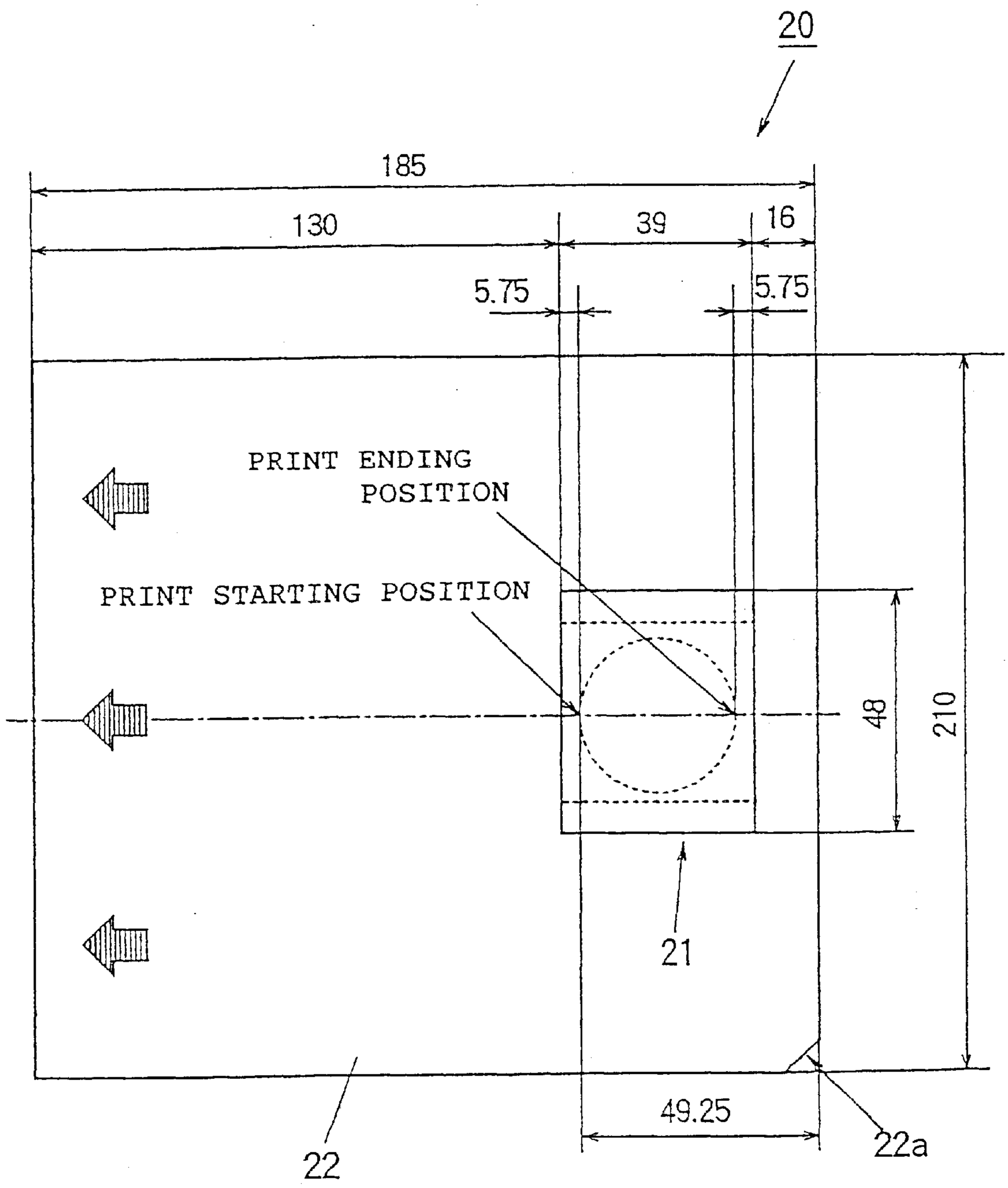
20
185
130
39
16
5.75
5.75
PRINT ENDING POSITION
PRINT STARTING POSITION
48
210
21
49.25
22
22a

Fig. 5

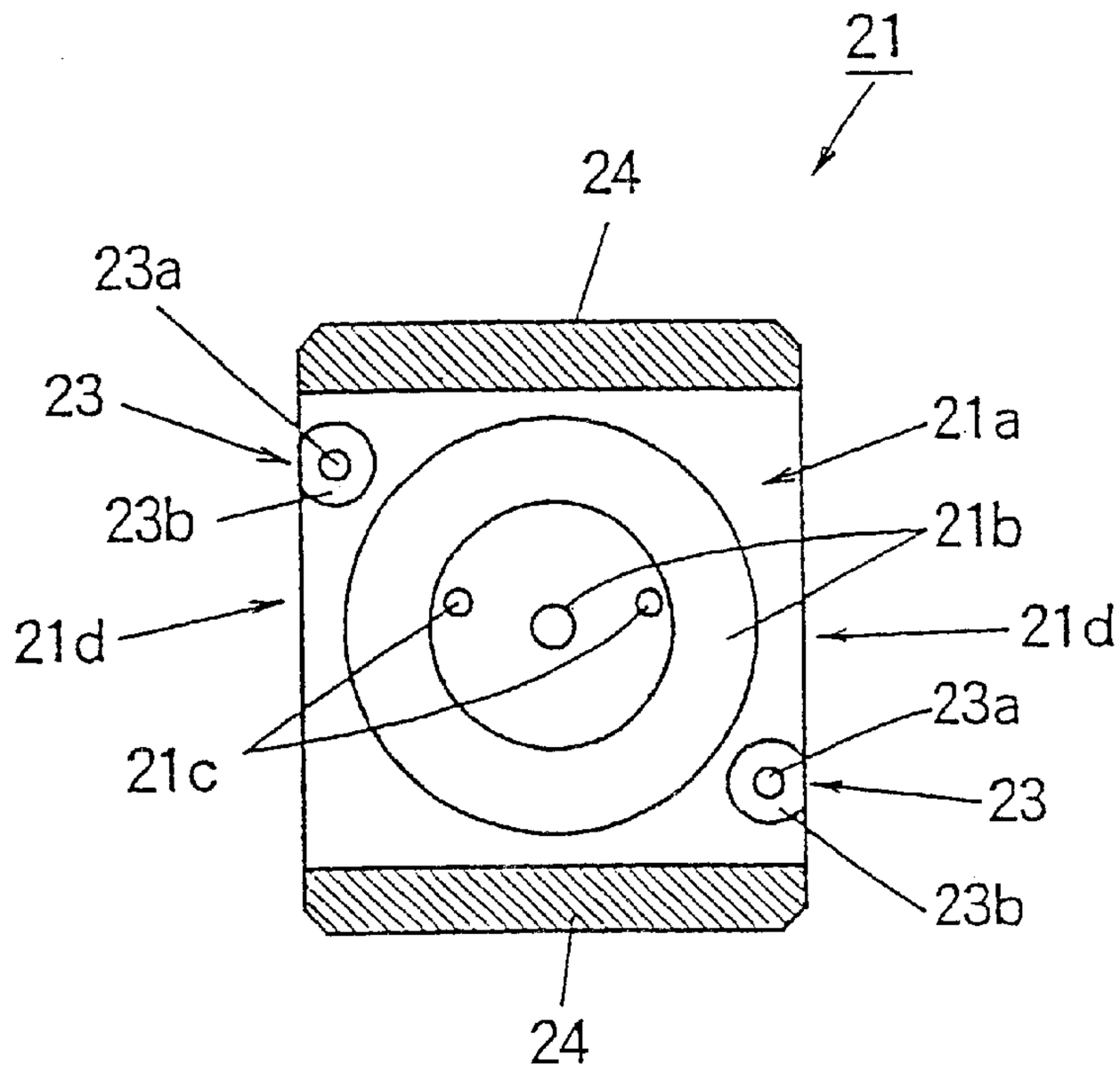
21
24
23a
23
21a
23b
21b
21d
21d
23a
21c
23
23b
24

Fig. 6

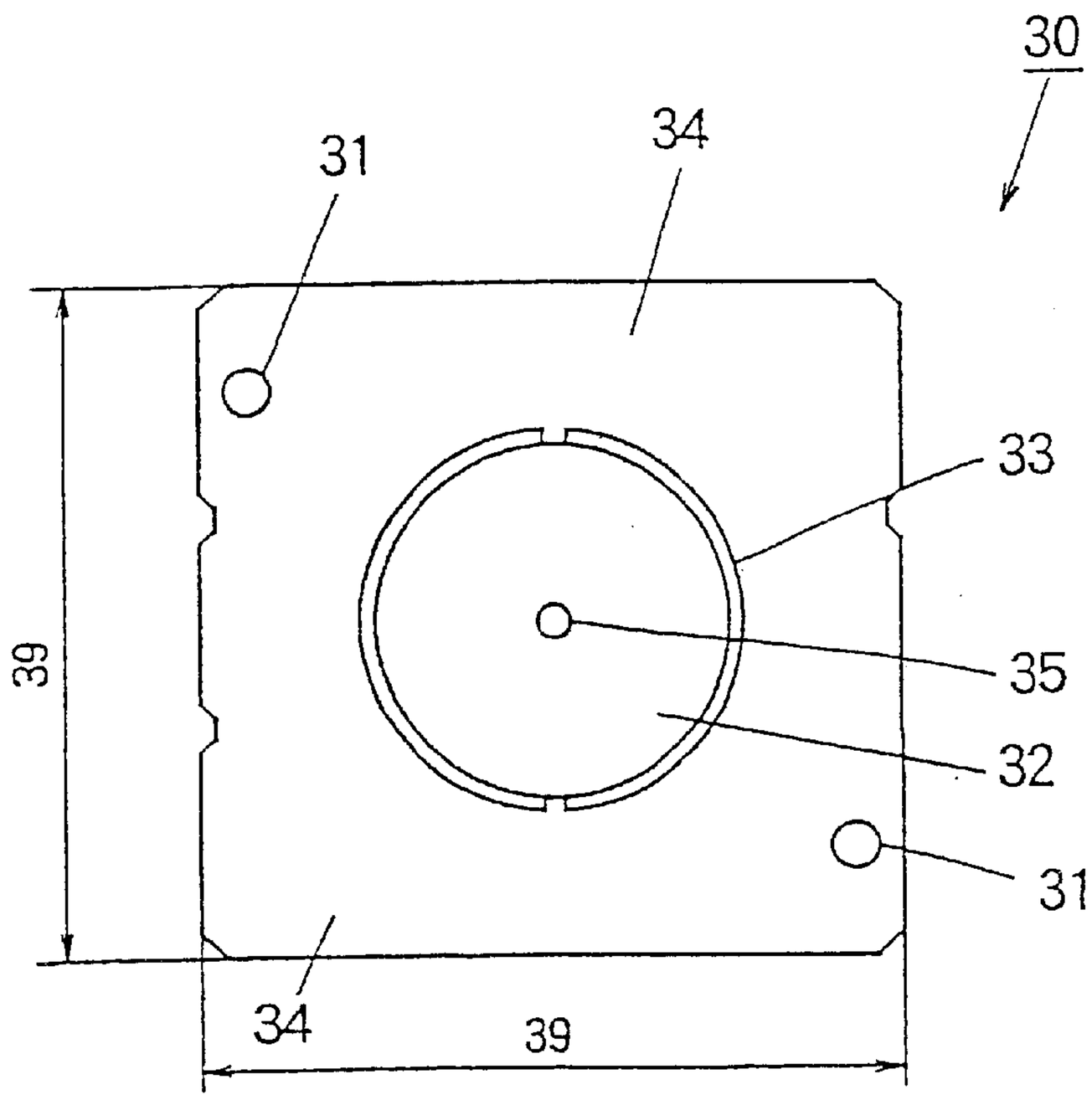
30
31
34
33
39
35
32
31
34
39

Fig. 7

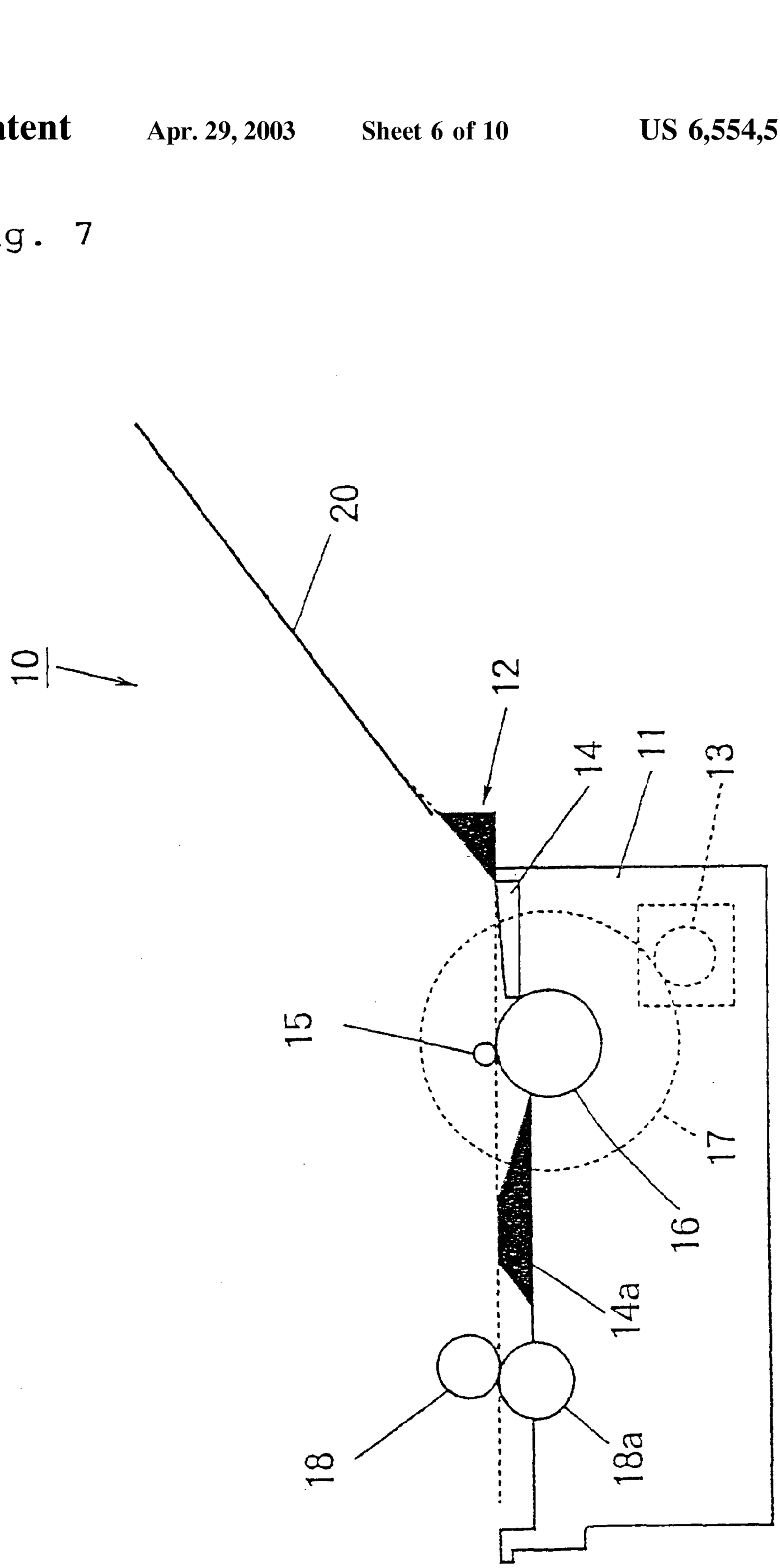

Fig. 8

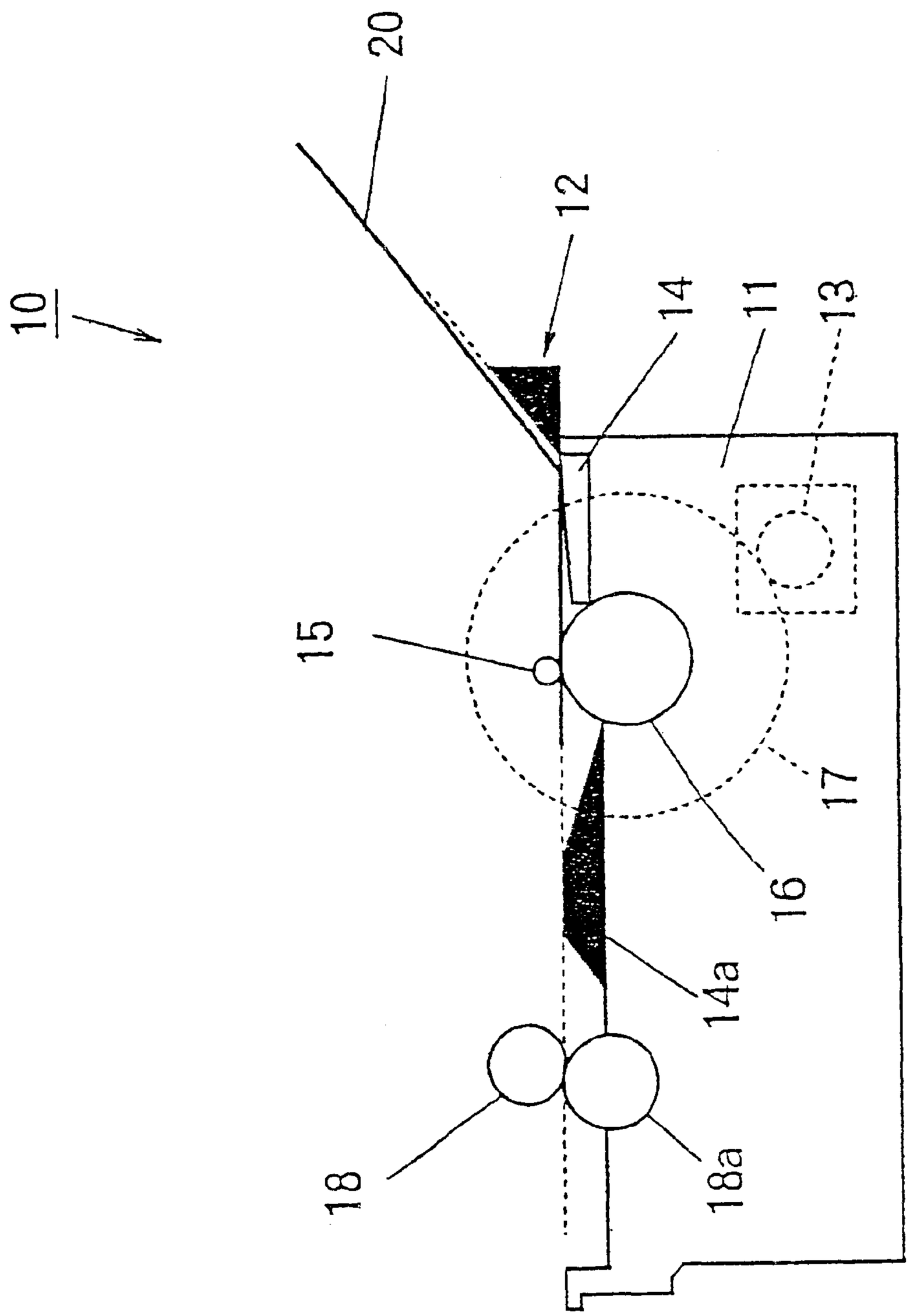

Fig. 9

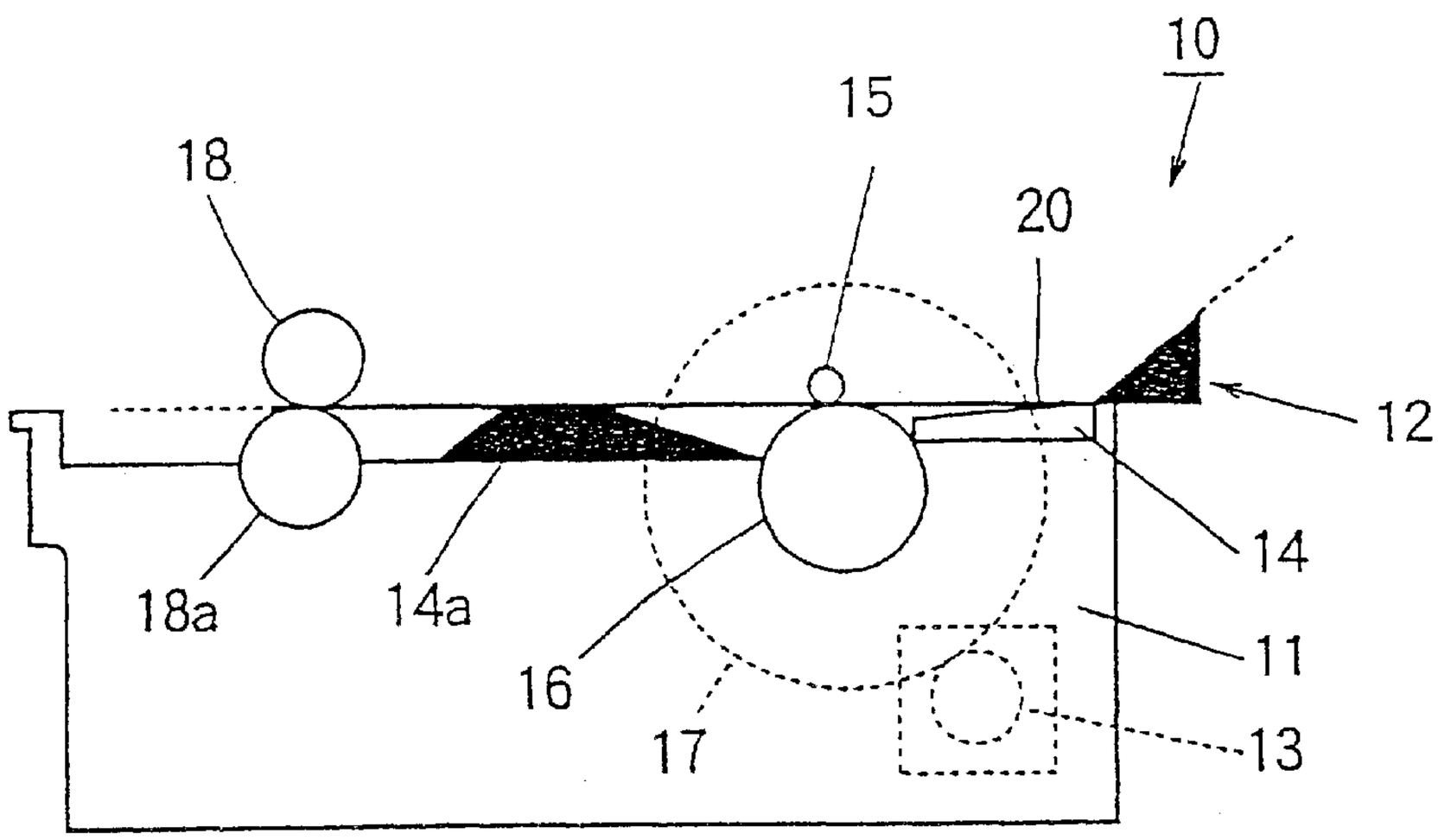
10
15
18
20
12
14
18a
14a
16
11
17
13

Fig. 10

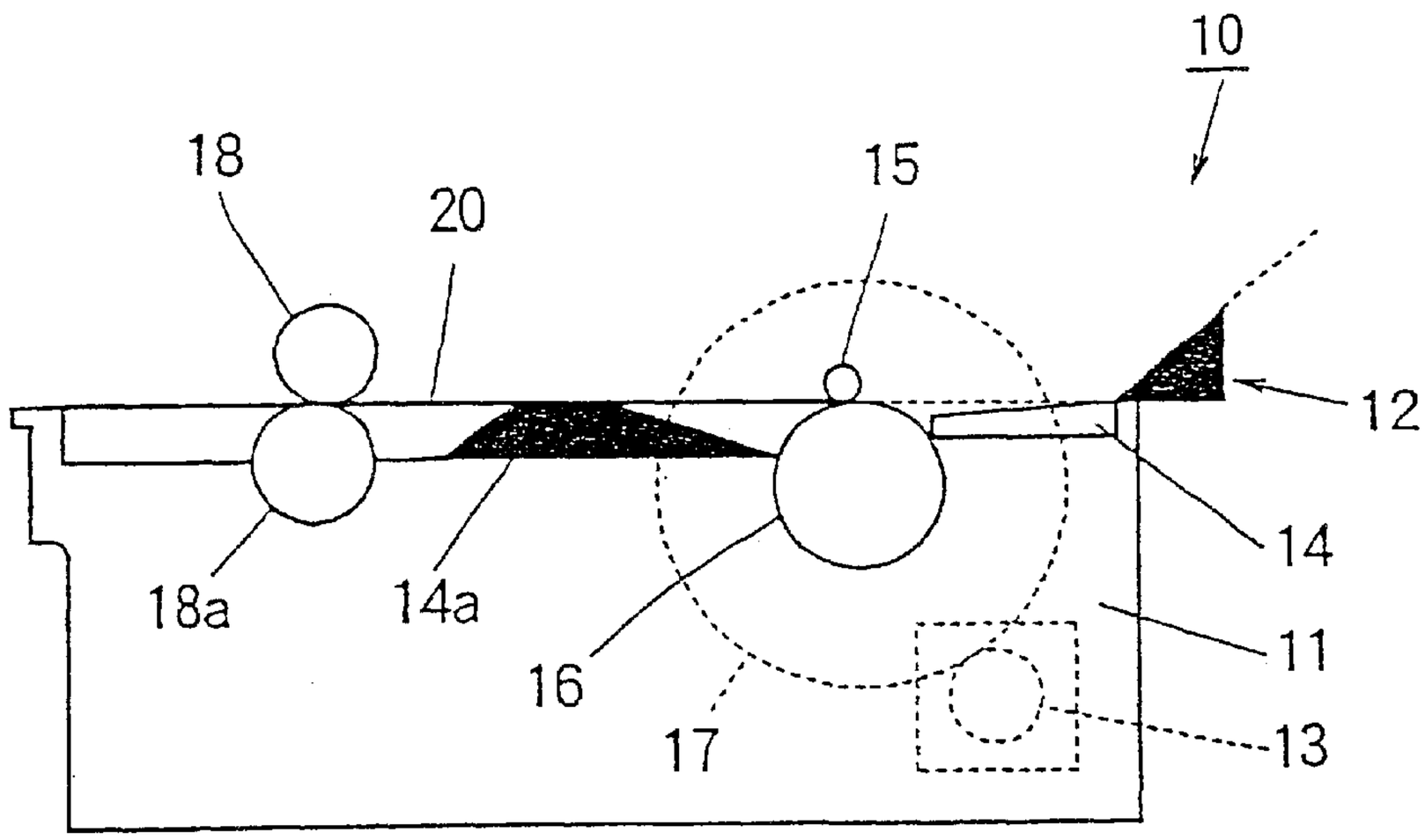
10
18
15
20
12
14
18a
14a
16
11
17
13

Fig. 11

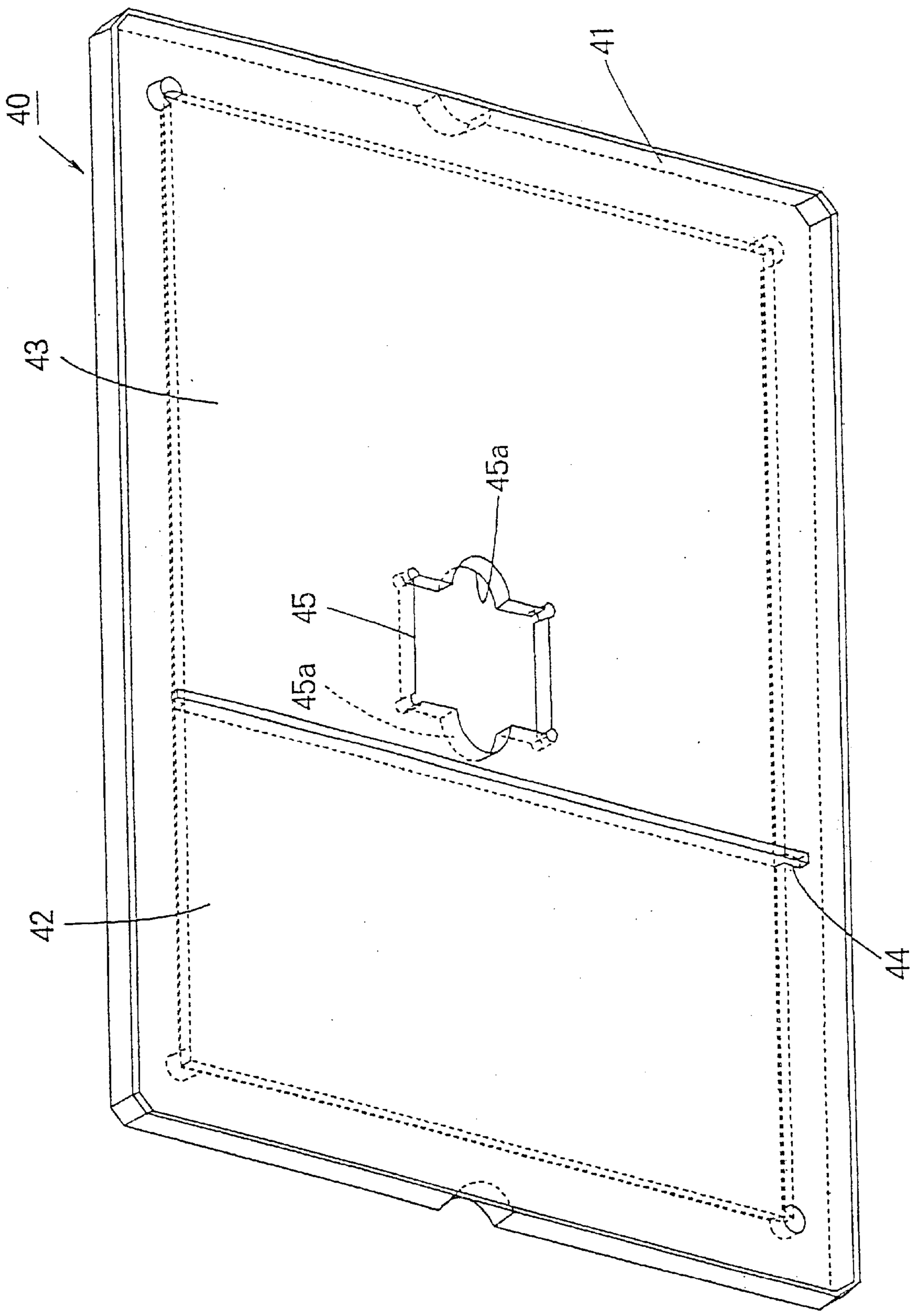

Fig. 12

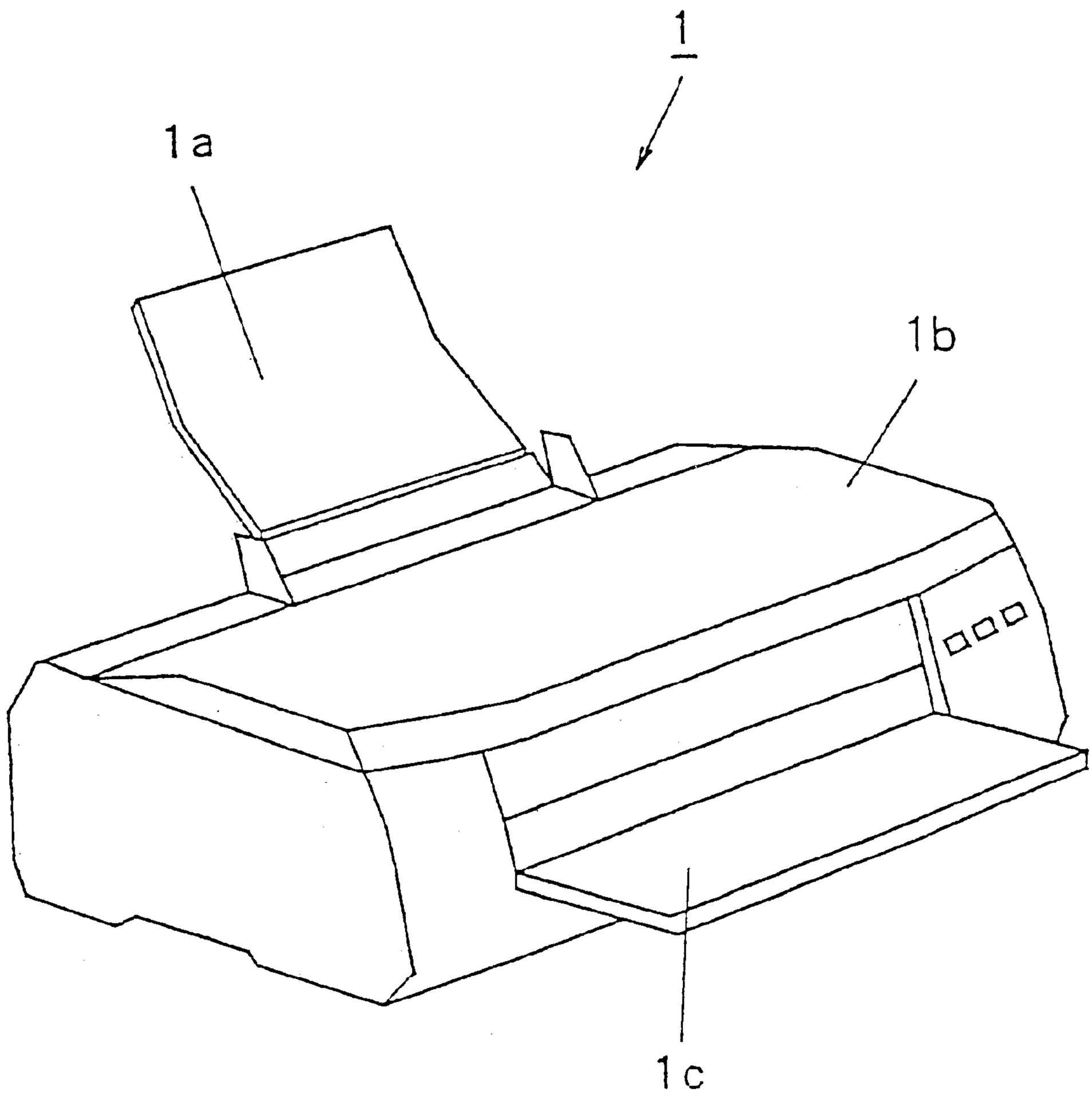

PRIOR ART

PRINTING AID, ASSEMBLY JIG THEREFOR, AND RECORDING DEVICE

TECHNICAL FIELD

The present invention relates to a printing aid which is used when printing is performed on a material to be printed by a recording device, to an assembly jig therefor, and to a recording device having the printing aid.

BACKGROUND ART

Hitherto, a printer device, in particular, a so-called personal use printer device privately used by an individual person at home has been, for example, as shown in FIG. **12**.

That is, a printer device **1** includes a printer body **1***b*, and a stage **1***a*, which is connected to the printer body **1***b* and which places thereon, for example, a paper, which is a material to be printed.

When a user tries to print characters or the like on a paper, the paper is placed on the stage **1***a*, and operation sections and the like provided in front of the printer body **1***b* are operated to start printing.

When printing of the printer device **1** is started, the paper placed on the stage **1***a* is guided by a feed roller (not shown) provided in the printer body **1***b* into the printer body **1***b*.

In this case, an angle shown in FIG. **12** is provided to a connecting part between the stage **1***a* and the inside of the printer body **1***b*. This is intended to allow the feed roller of the printer body **1***b* to easily hold the paper because the paper placed on the stage **1***a* is positioned in a direction to approach the feed roller of the printer body **1***b* by its own weight.

Therefore, when the paper placed on the stage **1***a* is guided by the feed roller of the printer body **1***b* into the printer body **1***b*, the paper is in a bent state.

In this way, the paper guided to the inside of the printer body **1***b* is guided to a printing position by the feed roller. Since a printer head (not shown) is provided at the printing position, characters and the like can be printed on the paper by ejecting ink contained in the printer head from a nozzle.

The thus-printed paper is discharged by a discharge roller (not shown) provided in the printer body **1***b* toward a discharge pad **1***c*, is placed on the discharge pad **1***c*, and is then stopped. In this state, the user receives a printed paper from the discharge pad **1***c*.

Incidentally, in the printer device **1** as described above, printing cannot be performed on a material other than the paper, for example, on a dial of a timepiece, which is relatively small, hard, and thick.

In consideration of the above point, the present invention has as its object to provide a printing aid which makes it possible to print on various types of materials to be printed by a recording device, such as a printer device, to provide an assembly jig therefor, and to provide a printer device having the printing aid.

DISCLOSURE OF INVENTION

The above object is achieved by a printing jig according to one aspect of the invention including a printing position-determining member for determining a position of a material to be printed on a printing position of a recording device, and a placement member for material to be printed for placing the material to be printed at a portion corresponding to the printing position determined by the printing position-determining member.

Since the printing jig includes a printing position-determining member for determining a position of a material to be printed on a printing position of a recording device, and a placement member for material to be printed for placing the material to be printed at a portion corresponding to the printing position determined by the printing position-determining member, if the material to be printed is placed on the placement member for material to be printed, the material to be printed can be positioned at the printing position by the printing position-determining member.

Therefore, printing can be performed regardless of the size of the material to be printed.

According to another aspect of the invention, the printing position-determining member is formed of a base material having flexibility.

Since the printing position-determining member is formed of a base material having flexibility, the base material having flexibility is guided to a guide section of the recording device while being bent.

Therefore, even if the material to be printed is hard and is not bent, the base material having flexibility is bent instead of the material to be printed, and is correctly guided into the recording device.

According to another aspect of the invention, the printing position-determining member is provided with a printing direction-indicating part for indicating a printing direction.

Since the printing position-determining member is provided with a printing direction-indicating part for indicating a printing direction, a user does not make a mistake in the printing direction.

According to another aspect of the invention, the printing direction-indicating part is formed by an arrow and/or a cutout.

Since the printing direction-indicating part is formed by an arrow and/or a cutout, the user does not make a mistake in the printing direction of the material to be printed by confirming the arrow and/or the cutout.

According to another aspect of the invention, the material to be printed forms a dial of a timepiece, the dial of the timepiece is provided with a mounting pin, and the placement member for material to be printed is formed with a hole for receiving the pin.

Since the material to be printed forms a dial of a timepiece, the dial of the timepiece is provided with a mounting pin, and the placement member for material to be printed is formed with a hole for receiving the pin, the pin for mounting the dial of the timepiece, which is the material to be printed, can be arranged in the placement member for material to be printed.

According to another aspect of the invention, the placement member for material to be printed is provided with a fixing part for fixing the material to be printed.

Since the placement member for material to be printed is provided with a fixing part for fixing the material to be printed, the material to be printed does not shift on the placement member for material to be printed, and is not removed from the placement member for material to be, printed.

According to another aspect of the invention, the placement member for material to be printed is provided with an ink-collecting part for collecting ink ejected from the recording device.

Since the placement member for material to be printed is provided with an ink-collecting part for collecting ink of the recording device, unnecessary ink is collected in the ink-

collecting part when the material to be printed is printed. Therefore, printing accuracy of the material to be printed is improved.

According to another aspect of the invention, the placement member for material to be printed is formed with a member for absorbing ink ejected from the recording device.

Since the placement member for material to be printed is formed with a member for absorbing ink ejected from the recording device, unnecessary ink is absorbed by the member for absorbing the ink ejected from the recording device when the material to be printed is printed. Therefore, printing accuracy of the material to be printed is further improved.

According to another aspect of the invention, the placement member for material to be printed is provided with a detaching recess for detaching the material to be printed.

Since the placement member for material to be printed is provided with a detaching recess for detaching the material to be printed, the user can easily detach the material to be printed using the detaching recess.

The above object is achieved by an assembly jig for a printing aid according to another aspect of the invention, including a storage section for storing a printing position-determining member, a processing section for processing the printing position-determining member into a required size, and a mounting opening for mounting a placement member for material to be printed having the material to be printed placed thereon at a predetermined position of the printing position-determining member.

According to this aspect of the invention, the printing position-determining member is stored in the storage section, and the printing position-determining member can be processed by the processing section into a required size. In addition, the user uses the mounting opening, whereby the printing member placement member can be accurately mounted to the printing position-determining member.

According to another aspect of the invention, the mounting opening is provided with a setting recess which corresponds to a holder for holding the placement member for material to be printed and sets up the placement member for material to be printed on the printing position-determining member.

Since the mounting opening is provided with a setting recess which corresponds to a holder for holding the placement member for material to be printed and sets up the placement member for material to be printed on the printing position-determining member, the user uses the setting recess, whereby the placement member for material to be printed can be easily set to the printing position-determining member.

The above object is achieved by a recording device according to another aspect of the invention, including a recording device body, a feed section for pulling in an object to a printing position in the recording device body, and a discharge section for discharging the object from the recording device body, wherein the object is a printing aid having a printing position-determining member for determining a position of a material to be printed on a printing position in the recording device, and a placement member for material to be printed for placing the material to be printed at a portion corresponding to the printing position determined by the printing position-determining member.

According to this aspect of the invention, the object is a printing aid having a printing position-determining member for determining a position of a material to be printed on a printing position in the recording device, and a placement member for material to be printed for placing the material to be printed at a portion corresponding to the printing position determined by the printing position-determining member. Therefore, if the material to be printed is placed on the placement member for material to be printed, the printing member is positioned at a printing position by the printing position-determining member. For this reason, the material to be printed can be printed in a state of being accurately positioned regardless of the size and the like.

BRIEF DESCRIPTION OF THE DRAWINGS

FIG. **1** is a schematic perspective view showing the configuration of a dial printing machine according to an embodiment of the present invention.

FIG. **2** is a schematic plan view showing an ASF section in FIG. **1**.

FIG. **3** is a schematic central sectional view showing a dial printing machine body in FIG. **1**.

FIG. **4** is a schematic plan view showing a dial-making jig.

FIG. **5** is a schematic plan view showing a pallet **21** in FIG. **4**.

FIG. **6** is a schematic plan view of a dial of a timepiece.

FIG. **7** is a schematic sectional view showing the state where the dial-making jig is set to the ASF section of the dial printing machine.

FIG. **8** is a schematic sectional view showing the state where the dial-making jig is guided to the inside of the dial printing machine body by rollers of the ASF section.

FIG. **9** is a schematic sectional view showing the state where the dial-making jig is further pulled in by a feed roller and a feed presser roller to reach a print starting position.

FIG. **10** is a schematic sectional view showing the state where the dial-making jig is moved in a discharge direction by a discharge roller, and the like.

FIG. **11** is a schematic perspective view showing an assembly jig of the dialmaking jig according to the embodiment.

FIG. **12** is a schematic perspective view showing a conventional printer device.

BEST MODE FOR CARRYING OUT THE INVENTION

The preferred embodiment of this invention will now be described in detail with reference to FIGS. **1** to **11**.

The present invention will be explained below in its preferred forms, and suitable technical limitations are thus imposed on the embodiments. However, it is to be understood that the invention is not limited to the specific forms of the embodiments thereof unless otherwise specified in the following description.

FIG. **1** is a view showing a dial printer **10** having a dial-making jig **20**, which is a printing aid according to this embodiment, and a dial printing machine body **11** which is a printer body as a recording device.

As shown in FIG. **1**, the dial-making jig **20** includes, for example, a pallet **21**, which is a placement member for material to be printed for placing a material to be printed, for example, a dial **30** of a timepiece, and a film **22**, which is a flexible film, including the pallet **21** at a predetermined position.

In addition, the dial printing machine body **11** is first provided with an ASF (Auto Sheet Feeder) section **12**, which is a feeding section by which a user places the dial-making jig **20**.

Specifically, the ASF section **12** is constructed as shown in FIG. **2**. FIG. **2** is a schematic plan view of the ASF section **12** shown in FIG. **1**. That is, the ASF section **12** has a feed support section **12***c* provided so that the user easily places the dial-making jig **20**, and two guides **12***a*, **12***b* for aligning both sides of the dial-making jig **20** when the dial-making jig **20** is placed on the ASF section **12**.

In addition, the ASF section **12** includes two rollers **12***d*, **12***d*, and two guides **12***e*, **12***e* for feeding the dial-making jig **20** aligned by the guides **12***a*, **12***b* to the inside of the dial printing machine body **11**. The guides **12***e*, **12***e* perform function of guide parts for the dial-making jig **20** being correctly fed to the inside of the dial printer body **11**. The guides **12***e*, **12***e* are formed to have the length of, for example, about 105 mm as viewed from above.

Incidentally, the size of the dial printing machine body **11**, not including the feed support section **12***c*, is for example, 199 mm long, 467 mm wide, and 296 mm deep, as shown in FIG. **1**. This is the size of a so-called personal use-type printer used by an individual at home for private purposes.

The inside of the dial printing machine body **11** is constructed as shown in FIG. **3**. FIG. **3** is a central vertical sectional view of the dial printing machine body **11** in FIG. **1**.

The arrow of a broken line shown in FIG. **3** shows a path on which the dial-making jig **20** moves in the dial printing machine body **11**. In addition, as shown in FIG. **3**, the dial printing machine body **11** is provided with a rear platen **14** for receiving the dial-making jig **20** fed from the ASF section **12** and for connecting the dial-making jig **20** to the feed roller **16**. In addition, there are provided the feed roller **16** for receiving the dial-making jig **20** from the rear platen **14** and for feeding the dial-making jig **20** to a front platen **14***a*, which is at the printing position, a feed presser roller **15**, and a driving gear **17**. The dial-making jig **20** is pressed from above and below by the feed roller **16** and the feed presser roller **15**, whereby the dial-making jig **20** can be precisely fed to the front platen **14***a*.

A printer head **19** is disposed above the front platen **14***a*, and ink, such as pigment, is ejected from a nozzle of the printer head **19**, whereby a dial **30** of a time piece placed on the dial-making jig **20** is printed.

The printer head **19** is movably supported by a CR shaft **19***a* shown in FIG. **3**.

The dial-making jig **20** having the printing-ended dial **30** is held by a serrated roller **18** and a discharge roller **18***a*, which is a discharge section shown in FIG. **3**, and is discharged from the dial printer body **11**.

On the other hand, the dial-making jig **20** is constructed, for example, as shown in FIG. **4**. As shown in FIG. **4**, for example, a film **22**, which is a printing position-determining member, is formed by cutting a bendable special purpose glossy film into, for example, a sheet of 210 mm long and 185 mm wide, and having a weight of, for example, about 6.85 g. In addition, as the film **22**, a photo-print paper (manufactured by EPSON (registered trademark) Inc.), a photo-quality card (manufactured by EPSON (registered trademark) Inc.), a special purpose OHP sheet (manufactured by EPSON (registered trademark) Inc.), a superfine special purpose paper (manufactured by EPSON (registered trademark) Inc.), and a special purpose wood-free plain paper (manufactured by EPSON (registered trademark) Inc.) may be used instead of the special purpose glossy film. However, any material may be used as long as it can maintain environment resistance, abrasion resistance, and paper feed accuracy.

In addition, the film **22** is provided with three arrows for indicating the printing direction, as shown in FIG. **4**. A cutout **22***a* showing a rear end part at the time of printing is provided in the lower right corner in the figure. For this reason, the user does not make a mistake in the printing direction by the three arrows and the cutout **22***a*.

The pallet **21**, which is a placement member for material to be printed, is provided on the film **22**. The pallet **21** is, for example, made of aluminum, and is formed in the size of, for example, 48 mm long and 39 mm wide, and the weight is, for example, 7.19 g. Specifically, the pallet **21** is as shown in FIG. **5**.

As shown in FIG. **5**, the pallet **21** is formed with a quadrangular work placement part **21***a* for placing the dial **30** of the timepiece , which is a material to be printed. In addition, the work placement part **21***a* has two work fixing parts **23**, which are fixing parts, provided at the upper left and the lower right in the figure. The work fixing parts **23**, **23** are provided with protrusions **23***a* at the centers thereof, respectively, and recesses **23***b* having a depth of 0.3 mm are formed therearound. The dial **30** of the timepiece is provided with depressions and projections **31**, **31** (see FIG. **6**) so as to correspond to the protrusion **23***a* and the recesses **23***b*. Therefore, by fitting the depressions and projections **31**, **31** of the dial **30** to be printed into the protrusions **23***a* and the recesses **23***b* of the work fixing part **23**, the dial **30** of the timepiece is fixed to the pallet **21**.

In this case, when the dial **30** of the timepiece is insufficiently fixed, fixing side edges **24**, **24**, which are fixing parts provided at upper and lower ends of the pallet **21** in FIG. **5**, are used.

Incidentally, as shown in FIG. **6**, a dial body **32** incorporated into the timepiece is arranged in the center of the dial **30** of the timepiece, and a press-punched groove **33** is provided on the peripheral part thereof. And, quadrangular frames **34** for supporting the dial body **32** are disposed on the outside the thereof.

When printing is performed on the dial body **32**, printing is performed in a state where the frames **34** are attached to the dial **30**, and the frames **34** are removed after the completion of printing, and the dial body is attached to the timepiece.

Therefore, when printing is performed by the dial printer **10**, the dial **30** of the timepiece to which the frame **34** is attached is placed on the work placement part **21***a* of the pallet **21** shown in FIG. **5**.

For this reason, the upper and lower ends in the figure of the frame **34** of the dial **30** of the timepiece are placed on the portions of broken lines in FIG. **5**. And, in this state, by fixing the frames **34**, **34** to the fixing side edges **24**, **24**, which are the fixing parts provided on the upper and lower end parts of the pallet **21** in FIG. **5**, with, for example, an adhesive tape, the dial **30** of the timepiece can be fixed to the pallet **21** more firmly.

In addition, the pallet **21** is provided with two holes **21***c* for the pins, as shown in FIG. **5**. The holes **21***c*, **21***c* for pins are provided corresponding to mounting pins formed on the reverse face of the dial **30** of the timepiece shown in FIG. **6**. Since each mounting pin has a height of 1.3 mm to 1.6 mm, the holes **21***c*, **21***c* are formed so that they can accommodate the mounting pins having the height. In addition, in order to accommodate the mounting pins, the thickness of the pallet **21** is about 1.7 mm.

Incidentally, an ink-collecting part **21***b* having a diameter of 3 mm, and a depth of 0.3 mm is provided in the center of the work placement part **21***a* of the pallet **21**. In addition, an

ink-collecting part **21***b* having a depth of 0.3 mm is provided in the outer peripheral part of the ink-collecting part **21***b*.

These ink-collecting parts **21***b*, **21***b* are provided for the following reasons. That is, as shown in FIG. **6**, the dial **30** of the timepiece is provided with a circular hole **35** for passing a shaft of an hour hand or the like through the center of the dial body **32**. In addition, the press-punched groove **33** is also provided as described above. For this reason, when printing is performed with the dial printer **10**, the ink may leak from the hole **35** and the groove **33** to enter in between the dial **30** of the timepiece and the pallet **21**.

In order to prevent such ink leakage, the ink-collecting parts **21***b* are provided at portions of the pallet **21** corresponding to the hole **35** and the groove **35** from which the ink may leak.

In this case, when, for example, an absorbing sheet, which is a member for absorbing the ink, is arranged between the dial **30** of the timepiece and the pallet **21**, the absorbing sheet absorbs the leaked ink, so that the ink leakage can be prevented more effectively.

In addition, the pallet **21** is provided with two detaching recesses **21***d* on both sides thereof, as shown in FIG. **5**. The detaching recesses **21***d*, **21***d* serve as finger-hooking parts when the user detaches the dial **30** of the timepiece from the pallet **21**. Therefore, the detaching recesses **21***d*, **21***d* are formed to be 0.5 mm deep and 14 mm wide. That is, the width is set in consideration of the width of the finger of a user.

The pallet **21** is constructed as described above, and the dial **30** of the timepiece is placed and fixed thereon as described above.

The dial printing machine **10** according to this embodiment is constructed as described above. The operation and the like of the dial printing machine **10** will be described below. In addition, the positional relationship between the pallet **21** of the dial-making jig **20** and the film **22** will be also described while describing the operation and the like.

First, in order to print a predetermined pattern or the like on the dial **30** of the timepiece, the user places and fixes the dial **30** of the timepiece on the pallet **21** of the dial-making jig **20**, as described above. Thereafter, the dial-making jig **20** is set to the ASF section **12** of the dial printing machine **10**. FIG. **7** shows this state.

Next, the user switches on the dial printing machine **10**, and the dial-making jig **20** is guided to the inside of the dial printing machine body **11** by the roller **12***d* of the ASF section **12**. FIG. **8** shows this state.

In FIG. **8**, when the dial-making jig **20** is guided to the inside of the dial printing machine body **11**, since the rollers **12***d*, **12***d* are located on both sides of the ASF section **12**, the rollers **12***d*, **12***d* do not abut against the pallet **21** disposed in the center of the dial-making jig **20**.

That is, as shown in FIG. **4**, since the pallet **21** is disposed at the central part of the forward direction of the dial-making jig **20**, the rollers **12***d*, **12***d* of the ASF section **12** are provided so as to avoid the pallet **21** (see FIG. **2**). For this reason, the rollers **12***d*, **12***d* abut against only the film **22** in FIG. **4**.

In addition, although the film **22** of the dial-making jig **20** is bent in FIG. **8**, the pallet **21** and the dial **30** of the timepiece placed on the pallet **21** is guided to the inside of the dial printing machine body **11** without being bent.

Incidentally, in FIG. **8**, a part of the dial-making jig **20** reaches the feed roller **16** and the feed presser roller **15**.

Thereafter, the dial-making jig **20** is further pulled in by the feed roller **16** and the feed presser roller **15** to reach a print starting position. FIG. **9** shows this state. As shown in FIG. **9**, a front end part of the dial-making jig **20** reaches the serrated roller **18** and the discharge roller **18***a*, and the central part thereof is supported by the front platen **14***a*, the feed presser roller **15**, and the feed roller **16**. Furthermore, a rear end part thereof passes through the ASF section **12**, and is supported by the rear platen **14**. In this way, it is important that the dial-making jig **20** is placed almost horizontally in the dial printing machine body **11**. That is, when a part of the rear end part of the dial-making jig **20** is left in the ASF section **12**, an angle is formed between the dial-making jig **20** and the printer head **19** of the dial printer **10**, and since the angle is simultaneously formed between the pallet **21** and printer head **19** and between the dial **30** of the timepiece and the printer head **19**, correct printing cannot be performed.

Therefore, it is necessary to adjust the positional relationship between the pallet **21** and the film **22** in the state where the dial-making jig **20** is located at the position shown in FIG. **9**.

As shown in FIG. **4**, the length from the print starting on the pallet **21** to the right end of the film **22** is 49.25 mm. This is intended to start printing when the right end of the film **22** passes through the ASF section **12** and reaches the rear platen **14**. That is, this is due to the fact that the length from the right end of the rear platen **14** to the printing position of the front platen **14***a* is 50 mm, as shown in FIG. **3**.

In addition, as shown in FIG. **9**, in consideration of the fact that the dial-making jig **20** has reached the discharge roller **18***a* at the time of start of printing, and the height and operability of the ASF section **12**, the length between the left end of the film **22** and the left end of the pallet **21** is set to 130 mm.

Incidentally, when the dial-making jig **20** is set to the printing position, ink is ejected by the printer head **19** of the dial printing machine **10**, as described above, and printing of a predetermined pattern or the like is started. The dial-making jig **20** moves, and printing by the printer head **19** is continued to a print ending position shown in FIG. **4**.

In this case, even if the ink leaks from the groove **33** of the dial **30** of the timepiece, the ink is collected in ink-collecting parts **21***b*, **21***b*, of the pallet **21**, as described above, so that the ink does not enter in between the dial **30** of the timepiece and the pallet **21**.

When printing is completed, the dial-making jig **20** is moved by the discharge roller **18***a* and the like in the discharge direction, as shown in FIG. **10**. FIG. **10** shows the state of this time. Even at the time of completion of printing, it is necessary that the dial-making jig **20** abut against the feed roller **16** and the discharge roller **18***a*. For this reason, the length between the print ending position of the pallet **21** and the film **22** is 21.75 mm, as shown in FIG. **4**. This is because the length between the printing position and the feed roller **16** is 14 mm, as shown in FIG. **3**.

By operating the dial printer **10** according to this embodiment as described above, even a material, for example, the dial **30** of the timepiece which is relatively small, hard and thick, unlike a paper, can be printed merely by the preparation of the dial-making jig **20**, without preparing a special printer. Therefore, a retail timepiece store or an individual can easily show a favorite pattern and the like on the dial **30** of the timepiece simply by preparing a regular printer device, and the dial-making jig **20**.

Incidentally, the dial-making jig **20** used in the dial printing machine **10** according to this embodiment is assembled as follows.

That is, since the positional relationship between the pallet **21** forming the dial-making jig **20** and the film **22** are defined in precise detail, as described above, an assembly jig **40** of a dial-making jig, which is an assembly jig for the printing aid, is provided, as shown in FIG. **11**, so that the positional relationship can be set easily with a simple configuration.

As shown in FIG. **11**, the assembly jig **40** of the dial-making jig according to this embodiment includes a film storage section **41** serving as a storage section for storing the film **22**, which is a printing position-determining member, and a first cover **42** and a second cover **43** placed on the film **22** from above. In addition, a cutting section **44**, which is a working section, is provided between the first cover **42** and the second cover **43**. Incidentally, a portion formed by the second cover **43** is 210 mm long and 185 mm wide, which is the size of the film **22** shown in FIG. **4**.

Furthermore, the second cover **43** is provided with a pallet insertion hole **45**, which is a mounting opening. In addition, the pallet insertion hole **45** is provided with setting recesses **45***a*, **45***a* so that a holder (not shown) for holding the pallet **21** can be set on the film **22** in a state of holding the pallet **21**.

The assembly jig **40** of the dial-making jig according to this embodiment is constructed as described above. A method of use thereof will be described below.

First, the user stores the film **22** in the film storage section **41**. Thereafter, the first cover **42** and the second cover **43** are placed on the film **22**. Furthermore, a bonding agent, for example, a spray paste, is applied on the pallet **21**, and the pallet **21** is inserted from the pallet insertion hole **45** while the pallet **21** is being picked up and fingers of the use are inserted into the setting recesses **45***a* and **45***a*. Then, the pallet **21** is brought into abutment with the film **22**. This allows the pallet **21** to be bonded to the film **22** by the bonding agent. Thereafter, the film **22** is cut by the cutting section **44**, whereby the dial-making jig **20** shown in FIG. **4** is assembled.

In this case, since the pallet insertion hole **45** is positioned so that the pallet **21** is correctly placed on the position shown in FIG. **4**, the positions of the pallet **21** of the assembled dial-making jig **20** and the film **22** are as shown in FIG. **4**. This also applies to a case where pluralities of dial-making jigs **20** are assembled.

Therefore, if the assembly jig **40** of the dial-making jig is used, the dial-making jig **20** provided with the pallet **21** at the optimal position can be easily assembled.

While a dial of a timepiece is used as a material to be printed in this embodiment, the material is not limited thereto, and it is apparent that the present invention can be applied to other three-dimensional objects, for example, a card, a name badge, a pin badge, a pendant, a locket, a broach, a button, a medal, and the like.

What is claimed is:

1. A printing aid, comprising:

a printing position-determining member for determining a printing position of a non-flexible material relative to a recording device for printing on the non-flexible material; and

a placement member for placing the non-flexible material to be printed at a location on the printing position-determining member corresponding to the printing position determined by the printing position-determining member;

wherein the placement member includes a central area for accommodating the non-flexible material, a first ink-collecting area positioned in the approximate center of the central area and a second ink-collecting area positioned on the outer periphery of the central area.

2. A printing aid as claimed in claim **1**, wherein the printing position-determining member is formed of a base material having flexibility.

3. A printing aid as claimed in claim **1**, wherein the printing position-determining member is provided with a printing direction-indicating part for indicating a printing direction.

4. A printing aid as claimed in claim **3**, wherein the printing direction-indicating part is formed by at least one of an arrow and a cutout.

5. A printing aid as claimed in claim **1**, wherein the material to be printed forms a dial of a timepiece, the dial of the timepiece is provided with a mounting pin, and the placement member for material to be printed is formed with a hole for receiving the pin.

6. A printing aid as claimed in claim **1**, wherein the placement member for material to be printed is provided with a fixing part for fixing the material to be printed.

7. A printing aid as claimed in claim **1**, wherein the placement member for material to be printed is provided with an ink-collecting part for collecting ink ejected from the recording device.

8. A printing aid as claimed in claim **1**, wherein the placement member for material to be printed is formed with a member for absorbing ink ejected from the recording device.

9. A printing aid as claimed in claim **1**, wherein the placement member for material to be printed is provided with a detaching recess for detaching the material to be printed.

10. An assembly jig for a printing aid, comprising:

a storage section for storing a printing position-determining member, said storage section having a first opening for receiving the print position-determining member;

a processing section for processing the printing position-determining member into a required size; and

wherein said storage section includes a second opening for mounting a placement member for material to be printed having the material to be printed placed thereon at a predetermined position of the printing position-determining member.

11. An assembly jig for a printing aid as claimed in claim **10**, wherein the mounting opening is provided with a setting recess which corresponds to a holder for holding the placement member for material to be printed and sets up the placement member for material to be printed on the printing position-determining member.

12. A recording device, comprising:

a recording device body;

a feed section for pulling in an object to a printing position in the recording device body; and

a discharge section for discharging the object from the recording device body;

wherein the object is a printing aid having a printing position-determining member for determining a printing position of a non-flexible material relative to the recording device for printing on the non-flexible material; and

a placement member for placing the non-flexible material to be printed at a location on the printing position-determining member corresponding to the printing position determined by the printing position-determining member;

wherein the placement member includes a central area for accommodating the non-flexible material, a first ink-collecting area positioned in the approximate center of the central area and a second ink-collecting area positioned on the outer periphery of the central area.

13. An assembly jig for a printing aid, comprising:

a printing position-determining member that defines a printing area and that is adapted to be transported or positioned inside of a printer;

a storage section in which the printing position-determining member is contained, the storage section having a mounting opening corresponding to the printing area; and

a non-flexible placement member provided on the printing position-determining member at a position corresponding to the printing area, the non-flexible placement member being constructed to receive an object to be printed.

14. The assembly jig of claim **13**, further comprising:

a processing section for forming the printing position-determining member into a specified size.

15. The assembly jig of claim **13**, wherein the mounting opening has at least one setting recess to facilitate the setting of the placement member on the printing position-determining member.

16. The assembly jig of claim **13**, wherein the printing position-determining member comprises a flexible film.

17. The assembly jig of claim **13**, wherein the placement member comprises a pallet.

18. The assembly jig of claim **13**, wherein the printing position-determining member includes a printing direction indicator comprised of at least one of an arrow and a cutout.

19. The assembly jig of claim **13**, wherein the placement member is formed with at least one aperture, each of which is adapted to receive a mounting pin on an object to be printed.

20. The assembly jig of claim **13**, wherein the placement member includes a fixing part for fixing an object to be printed thereon.

21. The assembly jig of claim **13**, wherein the placement member is made of aluminum.

* * * * *