US006206600B1

(12) **United States Patent**
Rosenberg et al.

(10) **Patent No.: US 6,206,600 B1**
(45) **Date of Patent: Mar. 27, 2001**

(54) **COMBINATION TOOTHBRUSH AND TOOTHPASTE DISPENSER**

(75) Inventors: **Dorothy J. Rosenberg**, 28 Huntington Cir. Dr., Medford, NJ (US) 08055-3318; **Peter W. Bressler**, Philadelphia, PA (US)

(73) Assignee: **Dorothy J. Rosenberg**, Medford, NJ (US)

(*) Notice: Subject to any disclaimer, the term of this patent is extended or adjusted under 35 U.S.C. 154(b) by 0 days.

(21) Appl. No.: **09/442,980**

(22) Filed: **Nov. 18, 1999**

(51) **Int. Cl.**[7] **A46B 11/04**
(52) **U.S. Cl.** **401/272**; 401/153; 401/195
(58) **Field of Search** ..... 401/152, 153, 401/155, 170, 188 R, 195, 272, 273, 156, 187, 286, 287, 151

(56) **References Cited**

U.S. PATENT DOCUMENTS

1,465,840		8/1923	Celano .	
1,891,324		12/1932	Ferguson .	
2,743,042		4/1956	Burgin .	
3,507,599		4/1970	Meszaros et al. .	
4,692,047	*	9/1987	Endo	401/141
4,693,622		9/1987	Booth .	
4,733,983	*	3/1988	Hertrampf	401/146
4,787,765		11/1988	Kuo .	
4,957,125	*	9/1990	Yaneza	132/309
5,348,028		9/1994	Gustavel .	
5,425,591		6/1995	Contreras et al. .	
5,439,014		8/1995	Moussa .	
5,490,530		2/1996	Snowden .	
5,769,553		6/1999	Chaudhri et al. .	
5,832,940		11/1998	Embry et al. .	
5,842,487		12/1998	Ledet .	
6,039,489	*	3/2000	Harman et al.	401/146

FOREIGN PATENT DOCUMENTS

2633500	1/1990	(FR)	H04N/1/00

* cited by examiner

Primary Examiner—Henry J. Recla
Assistant Examiner—Peter deVore
(74) *Attorney, Agent, or Firm*—Akin, Gump, Strauss, Hauer & Feld, L.L.P.

(57) **ABSTRACT**

Disclosed is a combination toothbrush and toothpaste dispenser. The toothpaste dispenser has a top and a container located therein. The container has a top and a bottom, and toothpaste located within the container. The container is compressible. The toothbrush includes a head portion which has a plurality of bristles extending therefrom and at least one hole extending thereinto. The toothbrush also includes a stem portion having a channel extending therethrough. The channel has first and second opposing ends. The first end is in fluid communication with the at least one hole and the second end is in fluid communication with the top of the container. The toothbrush is reciprocally mounted to the toothpaste dispenser, whereby reciprocation of the toothbrush relative to the toothpaste dispenser from a first position to a second position compresses the container to pump the toothpaste from the container, through the channel, and through the at least one hole and to the bristles for brushing. In one embodiment, the toothbrush is fixed at one end of the container. In another embodiment, the toothbrush is incrementally expelled from the container as the container collapses.

11 Claims, 4 Drawing Sheets

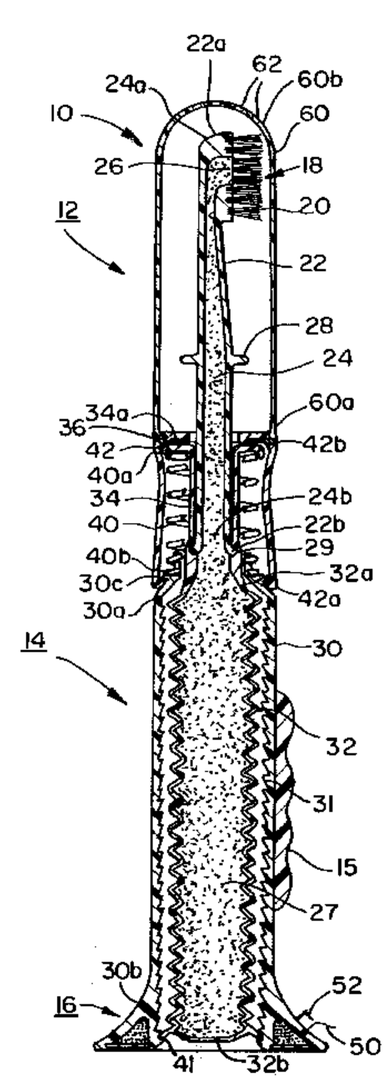

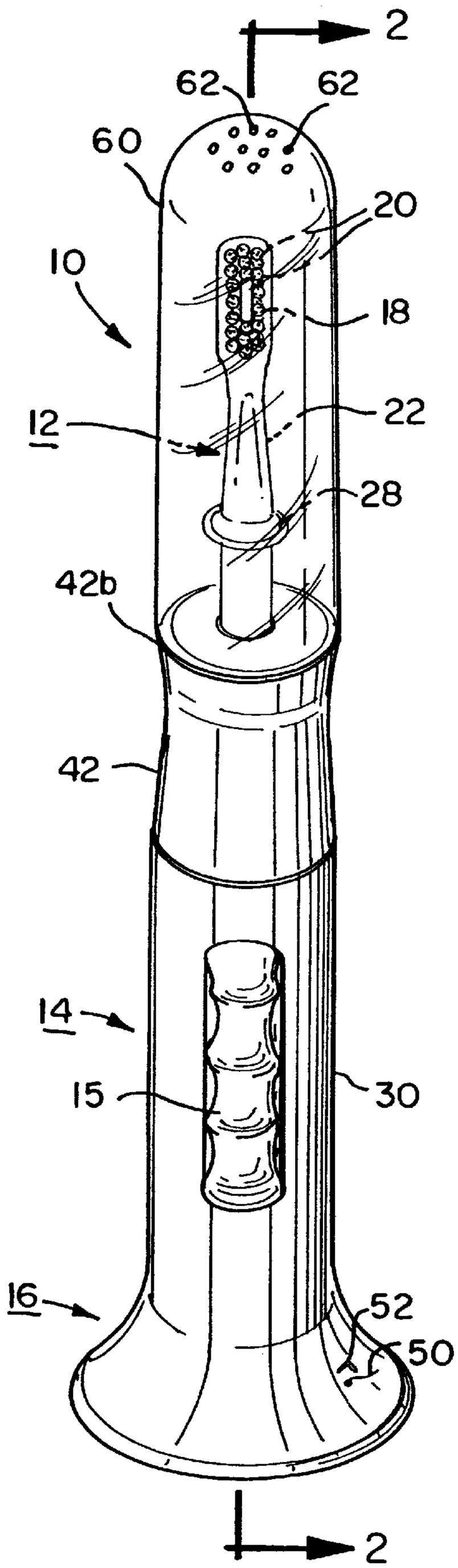
2
62
62
60
20
10
18
12
22
28
42b
42
14
15
30
16
52
50
2

FIG. 1

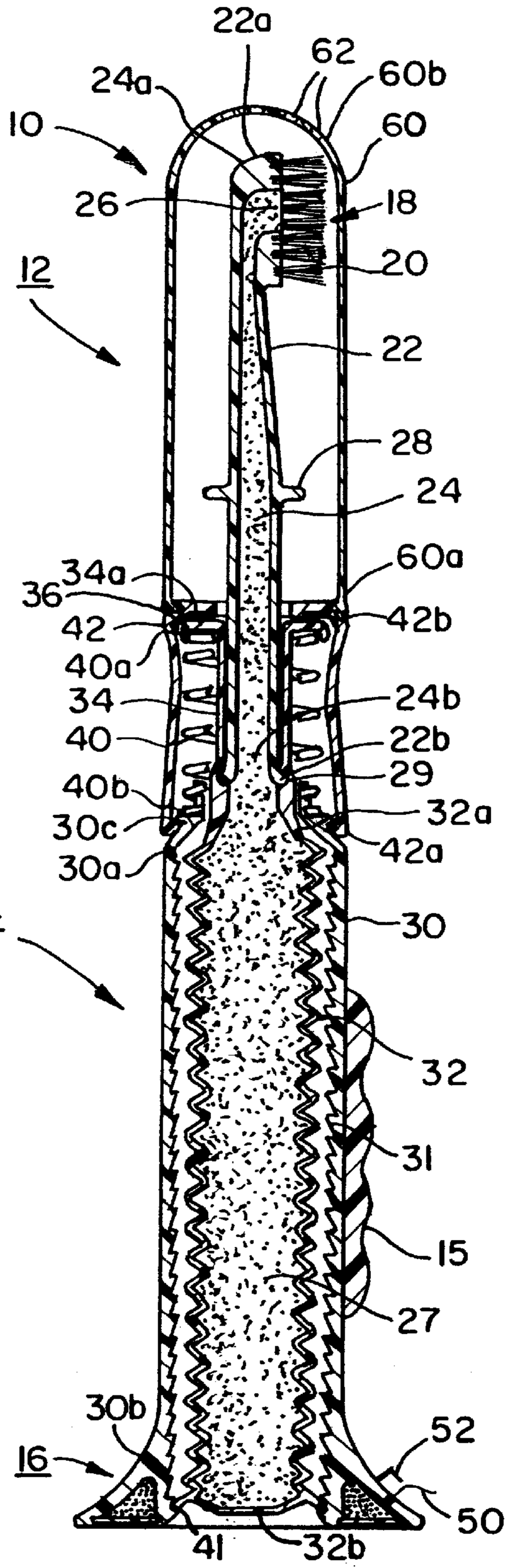
22a
62
60b
24a
60
10
26
18
20
12
22
28
24
60a
34a
36
42
42b
40a
34
24b
40
22b
29
40b
32a
30c
42a
30a
14
30
32
31
15
27
30b
52
16
50
41
32b

FIG. 2

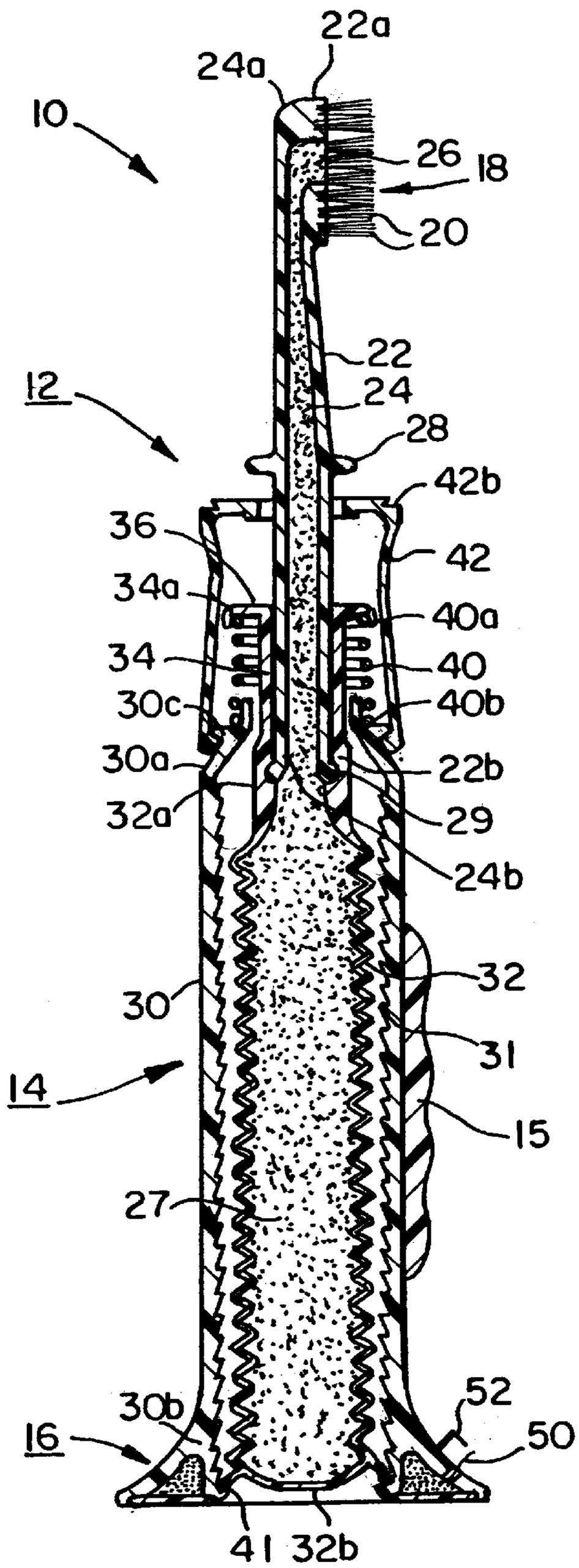
22a
24a
10
26
18
20
22
12
24
28
42b
36
42
34a
40a
34
40
30c
40b
30a
22b
32a
29
24b
32
30
31
14
15
27
52
30b
16
50
41
32b

FIG. 3

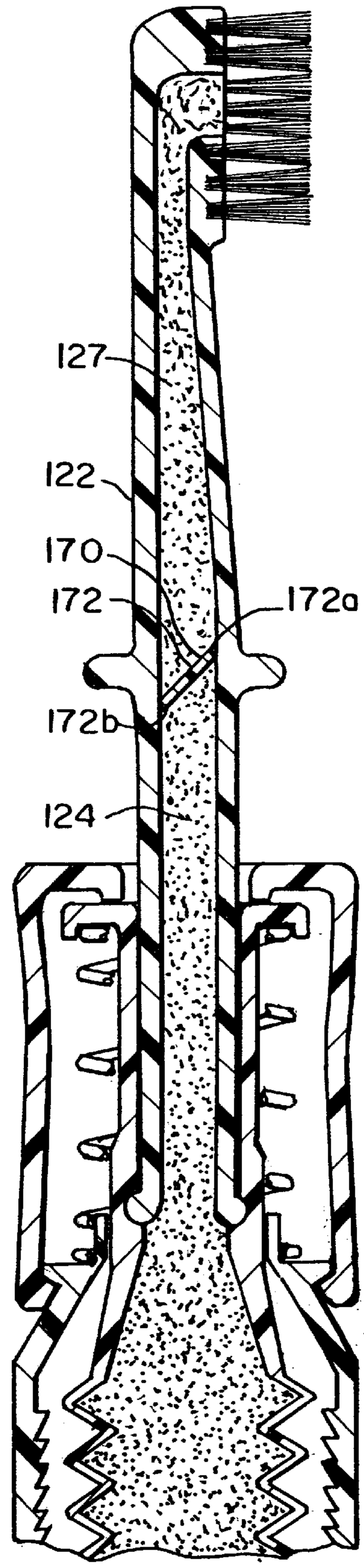
127
122
170
172
172a
172b
124

FIG. 4

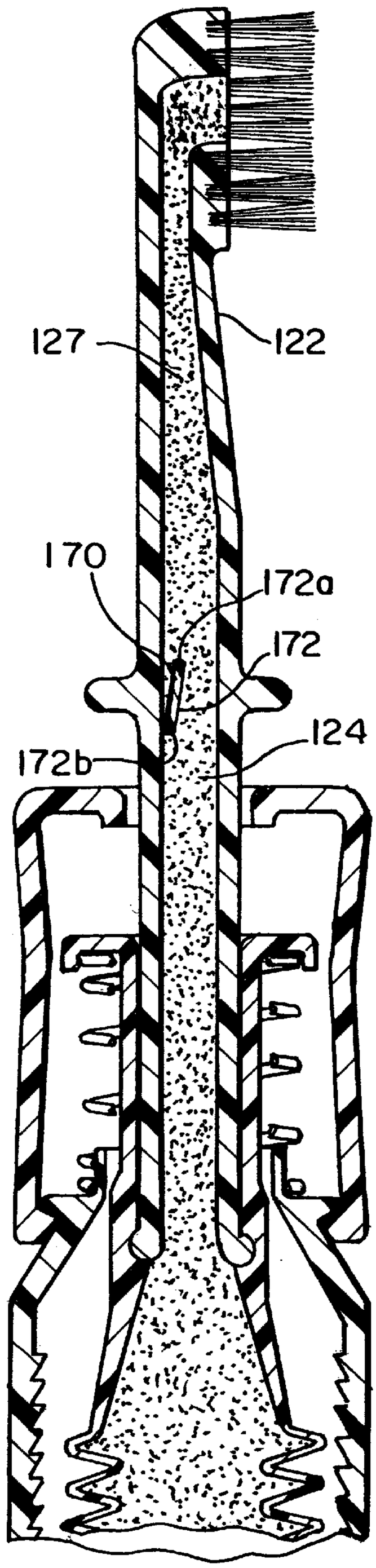
127
122
170
172a
172
124
172b

FIG. 5

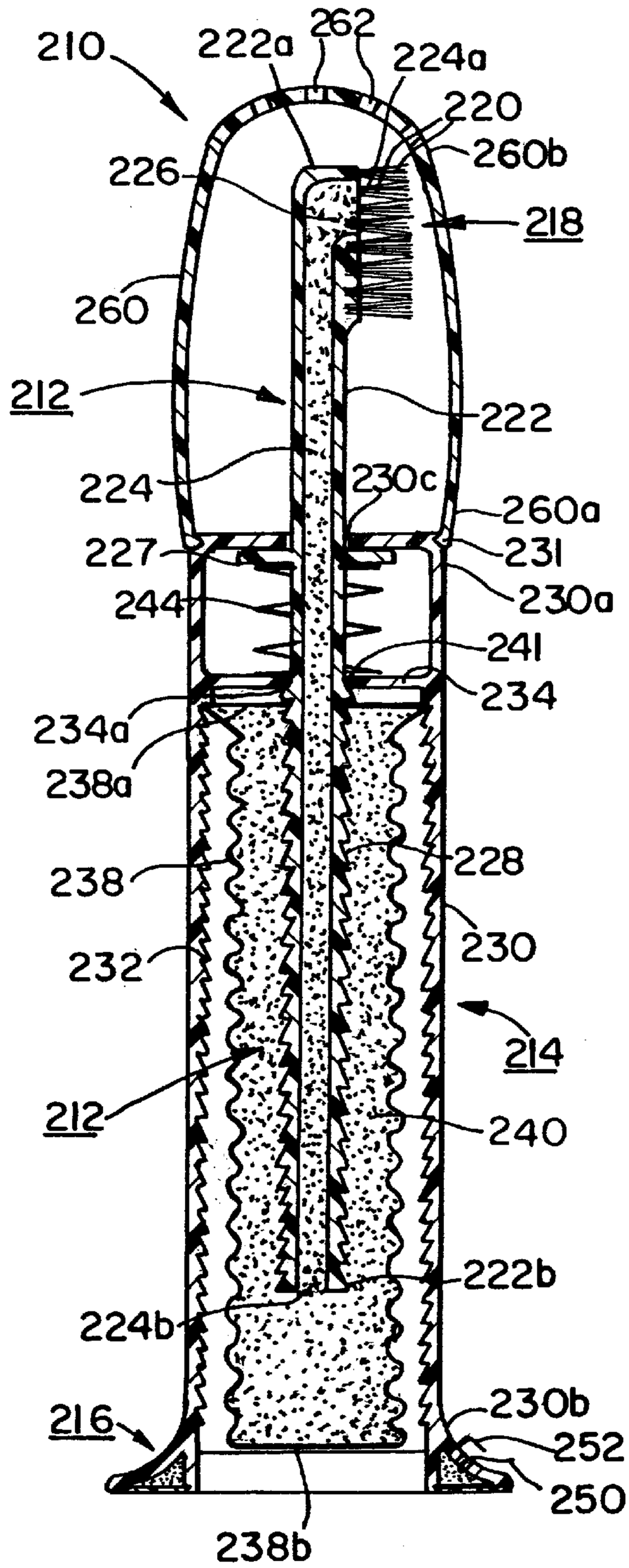
210
222a
262
224a
220
260b
226
218
260
212
222
224
230c
260a
227
231
244
230a
241
234
234a
238a
238
228
232
230
214
212
240
222b
224b
230b
216
252
250
238b

FIG. 6

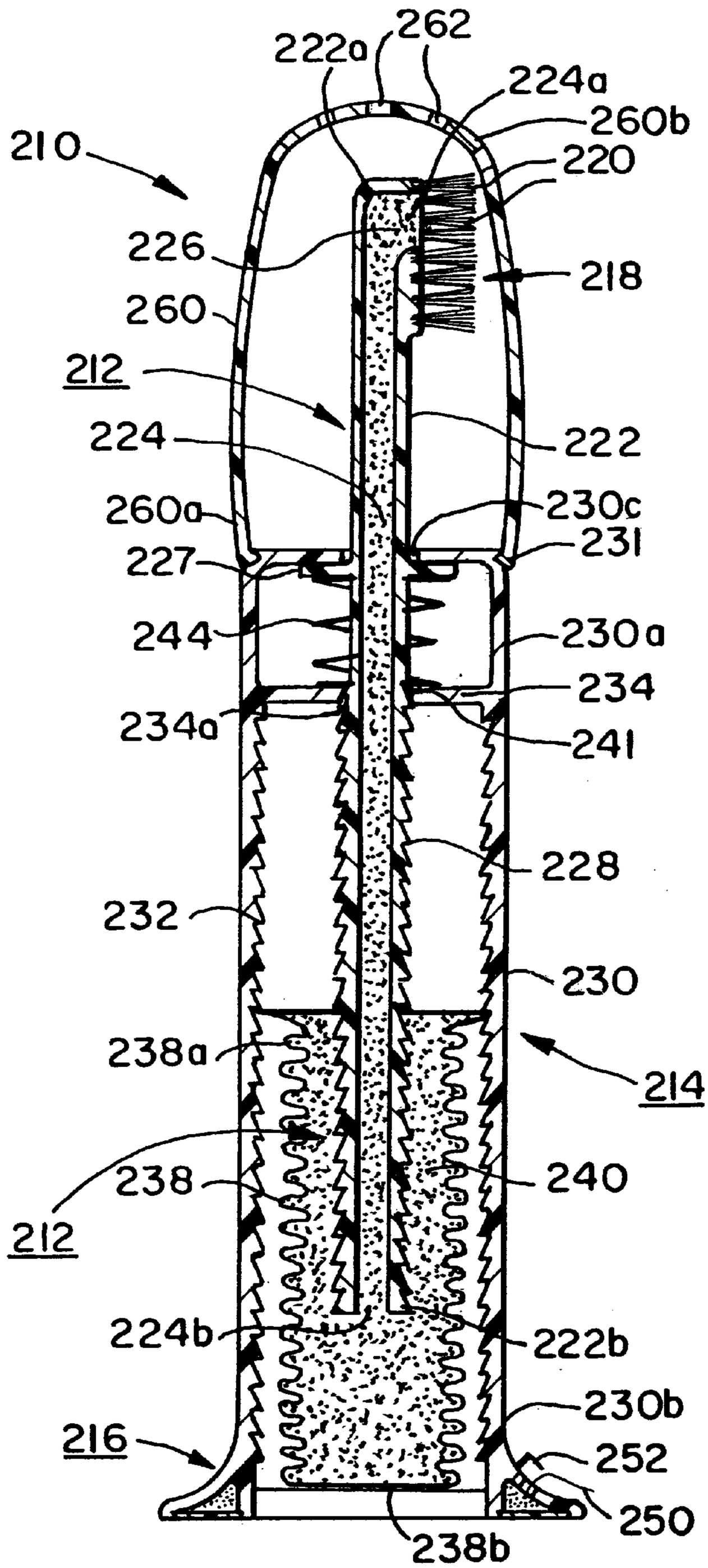
262
222a
224a
260b
210
220
226
218
260
212
224
222
260a
230c
227
231
244
230a
234
234a
241
228
232
230
238a
214
238
240
212
224b
222b
230b
216
252
250
238b

FIG. 7

COMBINATION TOOTHBRUSH AND TOOTHPASTE DISPENSER

BACKGROUND OF THE INVENTION

It is sometimes desirable to combine a toothbrush and a toothpaste dispenser in the same article. Such a combination is ideal for travelers who generally desire to pack as few items as possible. Additionally, such a combination may be attractive for children, encouraging them to brush their teeth more often.

It is known, as disclosed in U.S. Pat No. 4,787,765, to incorporate a pump which uses a reciprocating action between a toothbrush and an integrated toothpaste dispenser to dispense toothpaste from the dispenser onto the free ends of the bristles. As a user pushes the toothbrush head into the dispenser, toothpaste is pumped from the dispenser through a nozzle and onto the bristles. U.S. Pat No. 5,096,321 discloses a combination toothbrush and toothpaste dispenser which incorporates a pump on the dispenser to pump toothpaste through a hollow cavity within the toothbrush to distribute toothpaste to the bristles. One drawback to these inventions is that the mechanisms required to pump the toothpaste are relatively complex and costly to manufacture.

It would be beneficial to provide a combination toothbrush and toothpaste dispenser which dispenses the toothpaste to the bristles through a hollow cavity within the toothbrush by means of a reciprocating pumping action of the toothbrush with respect to the toothpaste dispenser which incorporates a relatively simple operating mechanism and is inexpensive to manufacture.

BRIEF SUMMARY OF THE INVENTION

In one aspect, the present invention is a combination toothbrush and toothpaste dispenser. The combination comprises a toothpaste dispenser and a toothbrush. The toothpaste dispenser has a top and a container located therein. The container has a top and a bottom, and toothpaste located within the container. The bottom of the container is movable toward the top of the container. The toothbrush includes a head portion and a stem portion. The head portion has a plurality of bristles extending therefrom and at least one hole extending thereinto. The stem portion has a channel extending therethrough. The channel has first and second opposing ends. The first end is in fluid communication with the at least one hole and the second end is in fluid communication with the top of the container. The toothbrush is reciprocally mounted to the toothpaste dispenser, whereby reciprocation of the toothbrush relative to the toothpaste dispenser from a first position to a second position compresses the container to pump the toothpaste in a first direction from the container, through the channel, and through the at least one hole and to the bristles, and reciprocation of the toothbrush from the second position to the first position moves the bottom of the container toward the top of the toothpaste dispenser.

In a second aspect, the invention is also a combination toothbrush and toothpaste dispenser. The combination comprises a toothpaste dispenser and a toothbrush. The toothpaste dispenser includes a container. The container has a top and a bottom, and toothpaste is located within the container. The top of the container is movable toward the bottom of the container. The toothbrush includes a head portion and a stem portion. The head portion has a plurality of bristles extending therefrom and at least one hole extending thereinto. The stem portion has a channel extending therethrough. The channel has first and second opposing ends, the first end being in fluid communication with the at least one hole and the second end extending into and being in fluid communication with the container. The second end is outwardly movable from the container. The toothbrush is reciprocally mounted to the toothpaste dispenser, whereby reciprocation of the toothbrush relative to the toothpaste dispenser from a first position to a second position compresses the container to pump the toothpaste from the container, through the channel, and through the at least one hole and to the bristles, and reciprocation of the toothbrush from the second position to the first position extends the second end of the stem portion from the container.

BRIEF DESCRIPTION OF THE SEVERAL VIEWS OF THE DRAWINGS

The foregoing summary, as well as the following detailed description of preferred embodiments of the invention, will be better understood when read in conjunction with the appended drawings. For the purpose of illustrating the invention, there is shown in the drawings embodiments which are presently preferred. It should be understood, however, that the invention is not limited to the precise arrangements and instrumentalities shown. In the drawings:

FIG. **1** is a perspective view of a first embodiment of a combination toothbrush and toothpaste dispenser according to the present invention, with the toothbrush in a first, uncompressed position;

FIG. **2** is a side elevational view, in section, of the first embodiment of the combination toothbrush and toothpaste dispenser according to the present invention, taken along lines **2**—**2** in FIG. **1**, with the toothbrush in a first, uncompressed position;

FIG. **3** is a side elevational view, in section, of the first embodiment of the combination toothbrush and toothpaste dispenser according to the present invention, with the cover removed and the toothbrush in a second, compressed position;

FIG. **4** is an enlarged partial side elevational view, in section, of an alternate version of the first embodiment of the combination toothbrush and toothpaste dispenser, with the cover removed and with a flapper valve in an open position;

FIG. **5** is an enlarged partial side elevational view, in section, of the alternate version of the first embodiment of the combination toothbrush and toothpaste dispenser, with the cover removed and with the flapper valve in a closed position;

FIG. **6** is a side elevational view, in section, of a second embodiment of the combination toothbrush and toothpaste dispenser according to the present invention, with the dispenser full; and

FIG. **7** is a side elevational view, in section, of the second embodiment of the combination toothbrush and toothpaste dispenser according to the present invention, with the dispenser partially used.

DETAILED DESCRIPTION OF THE INVENTION

Certain terminology is used in the following description for convenience only and is not limiting. The words "lower" and "upper" designate directions in the drawings to which reference is made. The words "inwardly" and "outwardly" refer to directions toward and away from, respectively, the geometric center of the combination toothbrush and toothpaste dispenser and designated parts thereof. The word "a" is defined to mean "at least one". The terminology includes the words above specifically mentioned, derivatives thereof

and words of similar import. In the drawings, like numerals are used to indicate like elements throughout.

Referring to FIGS. **1–3**, a first preferred embodiment of a combination toothbrush and toothpaste dispenser **10** (hereinafter "dispenser **10**") comprises a toothbrush, generally indicated at **12**, a cartridge holder, generally indicated at **14**. A dental floss dispenser, generally indicated at **16**, can be optionally provided.

The toothbrush **12** is similar to a conventional toothbrush, and is comprised of a head portion **18**, a plurality of bristles **20** which extend from the head portion **18**, and a stem portion **22**. The toothbrush **12** can be a one-piece body construction with bristles **20** or can be a multi-piece body (not shown) if desired. Referring to FIG. **2**, the stem portion **22** includes a first, top end **22***a*, located proximate to, and preferably forming part of, the head portion **18**, and a second, bottom end **22***b*, located within the cartridge holder **14**. However, unlike a conventional toothbrush, the stem portion **22** has a hollow channel **24** extending through the length of the stem portion **22**. The channel **24** has a first, top end **24***a* and a second, bottom opposing end **24***b*. The top end **24***a* is in fluid communication with the head portion **18**. At least one hole **26** is located on the bristle side of the head portion **18** and extends from the surface of the head portion **18** into the top end **24***a* of the channel **24** to allow toothpaste **27** to exit the channel **24** at the head portion **18** as will be discussed in more detail herein. Although a single hole **26** is preferred, those skilled in the art will realize that more than one hole **26** can be used. Preferably, the hole **26** is sufficiently large to prevent any toothpaste **27** in the hole **26** from hardening and clogging the hole **26** between uses. The stem portion **22** is open at the bottom end **24***b* of the channel **24** and is in fluid communication with toothpaste **27** in the cartridge holder **14**.

As shown in FIG. **2**, the stem portion **22** includes a first knob **28** extending from the exterior of the stem portion **22** between the top and bottom ends **22***a*, **22***b* for reasons that will be explained. A second knob **29** extends from the exterior of the stem portion **22** at the bottom end **22***b*. The top end of the toothbrush **12** above the knob **28** is generally longitudinally co-axial with respect to the cartridge holder **14**, although those skilled in the art will realize that the toothbrush **12** can be angled, as the orientation of the top end of the toothbrush **12** with respect to the cartridge holder **14** will not affect the operation of the dispenser **10**.

Preferably, the toothbrush **12** is constructed from a pliable plastic or like material that enables the toothbrush **12** to at least slightly bend without breaking, although those skilled in the art will realize that other materials can be used.

Still referring to FIG. **2**, the toothbrush **12** is reciprocally mounted in the cartridge holder **14** for pump-like action from the toothbrush **12** with respect to the cartridge holder **14**. The cartridge holder **14** includes a hollow shell **30** having a top end **30***a* which is preferably tapered at least slightly inward for reasons that will be explained, and a bottom end **30***b* which can be, but needs not necessarily be, open. The interior of the shell **30** includes a plurality of upwardly facing ratchet teeth **31** extending from below the top end **30***a* to the bottom end **30***b*. Preferably, the ratchet teeth **31** extend around the entire interior of the shell **30**, although those skilled in the art will realize that the ratchet teeth **31** can extend only around several portions of the interior of the shell **30**. Preferably, the shell **30** is made of a thermoset plastic such as a polyolefin, polyurethane, polystyrene, polycarbonate or other relatively rigid polymer. Preferably, the shell **30** is capable of being molded.

A compressible container or cartridge **32**, which holds the toothpaste **27**, is located within the shell **30**. The cartridge **32** has an open top end **32***a* and a closed bottom end **32***b*, The cartridge **32** includes a neck **34** having a top end **34***a* located at the top of the cartridge **32** which extends above the top **30***a* of the shell **30**. The neck **34** is attached to the outside of the second end **22***b* of the stem portion **22** over the second knob **29**. Preferably, the neck **34** is attached to the stem portion **22** with a press or interference fit, although those skilled in the art will realize that other types of connections, such as a threaded connection, can be used.

The neck **34** preferably includes a lip **36** extending around the outer perimeter of the top end **34***a* of the neck **34**. A biasing element, preferably in the form of a helical spring **40**, is mounted around the exterior of the neck **34** such that a top end **40***a* of the spring **40** is engaged with the lip **36** and a bottom end **40***b* is engaged with the tapered top end **30***a* of the shell **30** as shown in FIG. **2**. The spring **40** biases the toothbrush **12** to a first, generally upward, uncompressed or extended position. Preferably, the spring **40** is sized to be continuously biased between the lip **36** and the top end **30***a* of the shell **30**, although those skilled in the art will realize that the spring **40** need not be continuously biased. The spring **40** allows for reciprocal motion between the toothbrush **12** and the cartridge holder **14** in a manner to be described.

The top **32***a* of the cartridge **32** is open and in fluid communication with the bottom end **24***b* of the channel **24**. The bottom **32***b* of the cartridge **32** includes at least one tang **41** extending generally axially/downwardly and radially/outwardly from the exterior of the bottom **32***b* of the cartridge **32**. The bottom **32***b* of the cartridge **32** is upwardly movable along the length of the shell **30** toward the top **32***a*. The at least one tang **41** engages with the ratchet teeth **31** on the shell **30** in a manner which will be explained.

Preferably, the cartridge **32** is generally accordion shaped to reduce its interior volume when compressed, although those skilled in the art will realize that the cartridge **32** can be other shapes, as long as the cartridge **32** reduces in interior volume when compressed. The cartridge **32** is preferably constructed from a polymeric material, although those skilled in the art will realize that other materials can be used. The neck **34** is preferably made from the same material as the cartridge **32**, but is preferably thicker than the wall of the cartridge **32** so as to be relatively incompressible relative to the cartridge **32**.

A cap **42** is located on the first end **30***a* of the shell **30**, exterior of the spring **40** and the lip **36** and houses the spring **40** and the lip **36**. Preferably, the cap **42** is snapped onto the shell **30** such that a lip **42***a* in the cap **42** engages a tang **30***c* at the top of the shell **30**, although those skilled in the art will realize that the cap **42** can be affixed to the shell **30** by other methods, including but not limited to, a threaded connection.

The dental floss dispenser **16** is mounted on the cartridge holder **14** proximate to the bottom of the dispenser **10**, allowing the user to draw a desired length of dental floss **50** from the dispenser **16** and sever the dental floss **50** at a cutter **52**. Construction of dental floss dispensers is well known and is not an object of the present invention. Those skilled in the art will realize that the dental floss dispenser **16** is optional and need not be installed in the dispenser **10**.

As shown in FIGS. **1** and **2**, the toothbrush **12** is removably insertable into an open end of a transparent, generally elongated hollow cover **60** such that an open end **60***a* of the cover **60** is releasably attachable to the cap **42**. Preferably, the cap **42** includes a circumferential lip **42***b* which

interferingly, yet releasingly, engages the open end **60***a* of the cover **60**. The cover **60** preferably includes a plurality of air holes **62** located through a closed end **60***b* to release moisture from inside the cover **60** and reduce the build up of mildew on the toothbrush **12**.

The shell **30** is configured to allow a user to pick up the dispenser **10** by the shell **30** and hold the shell **30** while brushing his/her teeth. The exterior of the shell **30** can include a formed grip **15** for children or others who may have trouble gripping the shell **30**. The formed grip **15** may be shaped to include individual gripping tracks for each finger. Preferably, the formed grip **15** is made of a soft plastic or rubber to enable the user to firmly grip the exterior of the shell **30**, especially if the shell **30** is wet, as may be the case. The grip **15** can be a separate member, as shown, affixed by suitable means (e.g. adhesive or solvent weld or mechanical fastener) or molded as part of the shell **30**. The bottom end **30***b* of the shell **30** (or the floss dispenser **16**, if used) can act as a base for the dispenser **10**, which allows the dispenser **10** to stand vertically on a surface S, as shown in FIGS. **2** and **3**.

Preferably, the cartridge **32** contains a predetermined maximum amount of toothpaste **27** such that the dispenser **10** is disposable. More preferably, the cartridge **32** is sized to contain at least eight (8) ounces (226 grams) of toothpaste **27**. However, the amount of toothpaste **27** contained within the cartridge **32** is not limiting. Those skilled in the art will realize that the toothpaste **27** can be in either paste or gel form, as long as the toothpaste **27** is sufficiently viscous to allow the toothpaste **27** to generally remain in the channel **24** after being pumped into the channel **24** and not flow back into the cartridge **32**.

Preferably, the toothbrush **12** and the cartridge holder **14** are a single unit and the entire combination can be thrown away after the toothpaste **27** is exhausted from the cartridge **32**. However, those skilled in the art will realize that the toothbrush **12** can be separable from the cartridge holder **14** for connection to a second cartridge holder (not shown) when the toothpaste **27** in the cartridge **32** has been exhausted.

Operation of the dispenser **10** is as follows. Initially, the dispenser **10** in the condition as seen in FIG. **2**. To use the dispenser **10**, the user removes the cap **60** from the dispenser **10**. The user then pumps the toothbrush **12** in and out (upward and downward) of the cartridge holder **14**. Initially, the user may have to pump the toothbrush **12** several times to fill the channel **24** before toothpaste **27** is seen at the bristles **20**.

When the toothbrush **12** is pumped down into the cartridge holder **14**, the cartridge **32** is compressed, reducing the interior volume of the cartridge **32**. The knob **28** on the stem portion **22** prevents the toothbrush **12** from being pushed into the cartridge holder **14** more than a desired amount. The at least one tang **41**, which is engaged with a ratchet tooth **31**, prevents the bottom **32***b* of the cartridge **32** from moving downward as the stem portion **22** is pushed downward. Preferably, the cartridge **32** is compressed along the accordion lines of the cartridge **32**, although those skilled in the art will realize that the cartridge **32** need not be compressed along accordion lines, as long as the cartridge **32** is compressed. Toothpaste **27** in the cartridge **32** is pumped upward and into the second end **24***b* of the channel **24**. The toothpaste **27** or any toothpaste already in the channel **24** is forced up the channel **24**, through the at least one hole **26**, and is dispensed to the bristles **20** for brushing.

When the toothbrush **12** is pushed down, as shown in FIG. **3**, the tapered first end **30***a* of the shell **30** prevents movement of the spring **40** past the first end **30***a* of the shell **30**, compressing the spring **40** between the first end **30***a* of the shell **30** and the lip **36**, storing energy in the spring **40**. Pulling the toothbrush **12** up or, alternatively, allowing the energy stored in the spring **40** to push the toothbrush **12** up, draws the entire cartridge **32** upward. The toothpaste **27** in the channel **24** prevents air from entering the cartridge **32** through the channel **24** and subsequently prevents the cartridge **32** from expanding. As the cartridge **32** moves upward, the at least one tang **41** rides up at least one ratchet tooth **31**. Subsequent operation of the dispenser **10** further compresses the container **32** and discharges toothpaste **27** up the stem portion **22** to the bristles **20**. If desired, the user can pull dental floss **50** from the dental floss dispenser **16** for use in flossing by removing a length of dental floss **50** from the dispenser **16** by using the cutter **52** in a known manner.

In an alternate version of the first embodiment, as shown in FIGS. **4** and **5**, a check valve **170** can be installed in a channel **124** located within a stem portion **122** to ensure that toothpaste **127** that is pumped above the check valve **170** is not drawn back into a cartridge **132** when the toothbrush **112** moves to the second position. The check valve **170** includes a flapper **172** having a free end **172***a* and a fixed end **172***b*. Although not shown, the stem portion **122** can be made from a plurality of pieces to facilitate insertion of the check valve **170** into the stem portion **122**.

Operation of the alternate version of the first embodiment is similar to the operation of the first version of the first embodiment as described above, with the added feature that, as the toothbrush **112** is compressed from an initial position as shown in FIG. **4**, the flapper **172** pivots about the fixed end **172***b* and the free end **172***a* is forced upward to an open position as shown in FIG. **5**, opening a path of fluid communication through the channel **124** from the container **132**, past the flapper **172**, to bristles **120**. When the toothbrush **112** is released, the toothbrush **112** begins to return to its initial position from the compressed position and any suction forces which may be created in the cartridge **132** by the toothbrush **112** returning to its original position draw the toothpaste **127** located above the flapper **172** in the channel **124** downward. The toothpaste **127** in the channel **124** above the flapper **172** acts to close the flapper **172** to its original position. As the toothbrush **112** continues to return to its initial position, the entire cartridge **132** is pulled up the shell **130** in a manner similar to the manner described in the first version of the first embodiment. Toothpaste **127** in the channel **124** above the flapper **172** is not drawn back into the cartridge **132**.

A second embodiment of the combination toothbrush and toothpaste dispenser, generally indicated as **210**, is shown in FIGS. **6** and **7**. The dispenser **210** includes a toothbrush **212** and a cartridge holder **214**. A floss dispenser **216** can be fixed to the bottom of cartridge holder **214**, or alternatively omitted, as described above in the description of the first embodiment. The toothbrush **212** includes a head portion **218** with a plurality of bristles **220** extending therefrom. The toothbrush **212** also includes a stem portion **222** having a first, top end **222***a* fixedly connected to, and forming part of, the head portion **218** and a second, bottom end **222***b*, located distal from the top end **222***a*. A channel **224** having a first, top end **224***a* and an opposing, second, bottom end **224***b* extends through the stem portion **222**. The head portion **218** includes at least one dispensing hole **226** extending thereinto which fluidly communicates the top end **224***a* of the channel **224** to the bristles **220**. However, those skilled in the art will realize that more than one dispensing hole **226** can be used.

A retainer **227** is located on the outer perimeter of the stem portion **222** within the dispenser **214**. Preferably, the

retainer **227** is generally annular, although those skilled in the art will realize that the retainer **227** can be other shapes. The outer perimeter of the stem portion **222**, proximate to the second end **222***b*, includes a plurality of downwardly facing ratchet teeth **228**. The stem portion **222** is long enough to extend into the dispenser **214**, but short enough to allow the stem portion **222** to reciprocate in the dispenser **214** as will be discussed.

The dispenser **214** includes a generally annular hollow shell **230** which has a generally closed top end **230***a* having an opening **230***c* through which the stem portion **222** extends, and a closed bottom end **230***b*. The exterior of the top end **230***a* includes a circumferential lip **231** to releasably secure a cover. The shell **230** includes a plurality of downwardly facing ratchet teeth **232** located around an inner perimeter thereof. Preferably, the ratchet teeth **232** extend around the entire interior of the shell **230**, although those skilled in the art will realize that the ratchet teeth **232** can extend only around several portions of the interior of the shell **230**. The interior of the shell **230** also includes a shelf **234** extending inward from the interior perimeter of the shell **230**. The shelf **234** is located between the retainer **227** and a toothpaste cartridge **238**. Preferably, the shelf **234** is generally annular, although those skilled in the art will realize that the shelf **234** can be other shapes, as well. The shelf **234** includes a central opening **234***a* located as shown in FIG. **6**, which is generally co-axial with the opening **230***c* and which is sized to allow the stem portion **222** to reciprocate therethrough. The bottom end **230***b* of the shell **230** (or the floss dispenser **216**, if used) can act as a base for the dispenser **210**, which allows the dispenser **210** to stand vertically, as shown in FIGS. **6** and **7**.

The toothpaste cartridge **238** having a top end **238***a* and a bottom end **238***b* and containing toothpaste **240** is located within the shell **230**. The bottom end **224***b* of the channel **224** extends into and is in fluid communication with the cartridge **238**. The bottom end **222***b* of the stem portion **222** is outwardly movable from the container **238** in a manner to be further explained later herein. The top end **238***a* of the cartridge **238** is outwardly flared to engage the ratchet teeth **232** on the shell **230**. Preferably, the top end **238***a* of the cartridge **238** is flared around the entire perimeter of the top end **238***a*, but those skilled in the art will realize that the top end **238***a* can be flared around only part of the perimeter, as long as the top end **238***a* is engageable with the ratchet teeth **232** on the shell **230**. The top end **238***a* also includes an opening **241** generally co-axial with the opening **234***a* of the shelf **234** through which the stem portion **222** of the toothbrush **212** extends. The opening **241** is sized to generally seal the stem portion **222** passing therethrough, but also to allow the ratchet teeth **228** on the stem portion **222** to be pulled upward through the opening **241** during an upward stroke of the toothbrush **212**, but to not allow the ratchet teeth **228** on the stem portion **222** to be pushed into the opening **241** during a downward stroke of the toothbrush **212**. The cartridge **238** is collapsible such that the top **238***a* of the cartridge **238** is movable toward the bottom **238***b* of the cartridge **238**. As shown in FIGS. **6** and **7**, the cartridge **238** is preferably accordion shaped, but those skilled in the art will realize that the cartridge **238** can be other configurations, as long as the cartridge **238** collapses when compressed.

A helical spring **244** is located within the shell **230** between the retainer **227** and the shelf **234**. The stem portion **222** is disposed inside the spring **244** along a longitudinal axis of the spring **244**. The spring **244** biases the toothbrush **212** to a first upward position.

Dental floss **250** is located within and is dispensable from the dental floss dispenser **216** as described above in the first embodiment. The floss **250** is severable from the floss dispenser **216** by a floss cutter **252**, as is well known in the art.

A transparent, generally elongated hollow cover **260** having a free end **260***a* and a closed end **260***b* with a plurality of air holes **262** in the closed end **260***b* is releasably attachable to the cartridge holder **214**. Preferably, the open end **260***a* of the cover **260** engages the lip **231** on the top end **230***a* of the shell **230** in an interfering, yet easily separable relationship, although those skilled in the art will realize that other connections can be used.

Preferably, the dispenser **210** in constructed of the same materials as the dispenser **10** as described above, although those skilled in the art will realize that the dispenser **210** can be constructed from other materials as well.

Operation of the second embodiment of the dispenser **210** will now be discussed. The cover **260** is removed from the shell **230**. To dispense toothpaste **240** from the cartridge **238** to the bristles **220**, the user pushes down on the toothbrush **212** relative to the cartridge holder **214**, moving the toothbrush **212** from the first position to a second, downward, compressed position. The retainer **227** compresses the spring **244** between the retainer **227** and the shelf **234**, storing energy in the spring **244**. The ratchet tooth **228** of the stem portion **222** which is engaged with the top end **238***a* of the cartridge **238** pushes down on the top end **238***a* of the cartridge **238**, compressing the cartridge **238**. The flared top end **238***a* of the cartridge **238** moves down at least one shell ratchet **232**, reducing the interior volume of the cartridge **238**, and forcing toothpaste **240** to be pumped from the cartridge **238** into the bottom end **224***b* of the channel **224**. The toothpaste **240** travels up the channel **224** from the bottom end **224***b* to the top end **224***a*, out the at least one dispensing hole **226**, and to the bristles **220** for brushing.

When the toothbrush **212** is released relative to the cartridge holder **214**, the energy stored in the spring **244** forces the toothbrush **212** upward and outward relative to the cartridge holder **214** to the first position by acting against the retainer **227** and the shelf **234**. The shell ratchet tooth **232** which is engaged with the flared top **238***a* of the cartridge **238** prevents the cartridge **238** from expanding. As the toothbrush **212** moves upward relative to the cartridge holder **214**, at least one stem ratchet tooth **228** extends from the opening **241** in the cartridge **238**, returning the toothbrush **212** to its first, upward position relative to the cartridge holder **214**.

Subsequent pumps of the toothbrush **212** relative to the cartridge holder **214** repeat the process described above, sequentially compressing the cartridge **238** downward in the shell **230** from the top **238***a* of the cartridge **238**.

Dental floss **250** can be dispensed from the dental floss dispenser **216** in a known fashion, and the floss **250** can be separated from the dispenser **216** by using the floss cutter **252** in a known manner.

Preferably sized for adults, a smaller version of the dispenser **10**, **210** can be produced on a smaller scale for children, and can be provided without the dental floss dispenser **16**, **216**. Additionally, the dispenser **10**, **210** as disclosed herein is ideal for traveling. A smaller version of the dispenser (not shown), containing approximately two (2) to four (4) ounces (57 to 113 grams) of toothpaste, can be sized to fit into a typical shaving or travel bag. However, those skilled in the art will realize that other volumes of toothpaste can be used without departing from the spirit and scope of the present invention.

It will be appreciated by those skilled in the art that changes could be made to the embodiments described above without departing from the broad inventive concept thereof. It is understood, therefore, that this invention is not limited to the particular embodiments disclosed, but it is intended to cover modifications within the spirit and scope of the present invention as defined by the appended claims.

What is claimed is:

1. A combination toothbrush and toothpaste dispenser, the combination comprising:

a toothpaste dispenser having a top and a container located therein, the container having a top and a bottom, and toothpaste located within the container, the bottom of the container being movable toward the top of the container;

a toothbrush including a head portion and a stem portion, the head portion having a plurality of bristles extending therefrom and at least one hole extending thereinto, the stem portion having a channel extending therethrough, the channel having first and second opposing ends, the first end being in fluid communication with the at least one hole and the second end being in fluid communication with the top of the container, the toothbrush being reciprocally mounted to the toothpaste dispenser, whereby reciprocation of the toothbrush relative to the toothpaste dispenser from a first position to a second position compresses the container to pump the toothpaste in a first direction from the container, through the channel, and through the at least one hole and to the bristles, and reciprocation of the toothbrush from the second position to the first position moves the bottom of the container toward the top of the toothpaste dispenser.

2. The combination according to claim **1**, wherein the toothbrush is biased to the first position.

3. The combination according to claim **1**, wherein the toothpaste dispenser further comprises a base.

4. The combination according to claim **3**, wherein the toothpaste dispenser further comprises a dental floss dispenser mounted on the base.

5. The combination according to claim **1**, further comprising a generally elongated hollow cover having a closed end and an open end, the toothbrush being insertable into the open end, the open end being releasably mountable to the toothpaste dispenser, the closed end having a plurality of holes therethrough.

6. The combination according to claim **1**, further including a valve located in the channel, the valve preventing flow of toothpaste in a second direction.

7. A combination toothbrush and toothpaste dispenser, the combination comprising:

a toothpaste dispenser including a container, the container having a top and a bottom, and toothpaste located within the container, the top of the container being movable toward the bottom of the container; and

a toothbrush including a head portion and a stem portion, the head portion having a plurality of bristles extending therefrom and at least one hole extending thereinto, the stem portion having a channel extending therethrough, the channel having first and second opposing ends, the first end being in fluid communication with the at least one hole and the second end extending into and being in fluid communication with the container, the second end being outwardly movable from the container, the toothbrush being reciprocally mounted to the toothpaste dispenser, whereby reciprocation of the toothbrush relative to the toothpaste dispenser from a first position to a second position compresses the container to pump the toothpaste from the container, through the channel, and through the at least one hole and to the bristles, and reciprocation of the toothbrush from the second position to the first position extends the second end of the stem portion from the container.

8. The combination according to claim **7**, wherein the toothbrush is biased to the first position.

9. The combination according to claim **7**, wherein the toothpaste dispenser further comprises a base.

10. The combination according to claim **9**, wherein the toothpaste dispenser further comprises a dental floss dispenser mounted on the base.

11. The combination according to claim **7**, further comprising a generally elongated hollow cover having a closed end and an open end, the toothbrush being insertable into the open end, the open end being releasably mountable to the toothpaste dispenser, the closed end having a plurality of holes therethrough.

* * * * *