US005336188A

United States Patent [19]

Kriesel

[11] Patent Number: 5,336,188

[45] Date of Patent: Aug. 9, 1994

[54] FLUID DELIVERY APPARATUS HAVING A STORED ENERGY SOURCE

[75] Inventor: **Marshall S. Kriesel**, Saint Paul, Minn.

[73] Assignee: **Science Incorporated**, Bloomington, Minn.

[21] Appl. No.: **69,937**

[22] Filed: **May 28, 1993**

Related U.S. Application Data

[63] Continuation-in-part of Ser. No. 46,438, Apr. 13, 1993, which is a continuation-in-part of Ser. No. 987,021, Dec. 7, 1992, which is a continuation of Ser. No. 870,269, Apr. 17, 1992, Pat. No. 5,205,820, which is a continuation-in-part of Ser. No. 642,208, Jan. 16, 1991, Pat. No. 5,169,389, which is a continuation-in-part of Ser. No. 367,304, Jun. 16, 1989, Pat. No. 5,019,047.

[51] **Int. Cl.**[5] **A61M 37/00**

[52] **U.S. Cl.** **604/132**; 604/85; 604/246; 604/890.1; 128/DIG. 12

[58] **Field of Search** 604/82, 83, 85, 131–132, 604/151, 153, 246, 257, 890.1; 128/DIG. 12

[56] **References Cited**

U.S. PATENT DOCUMENTS

4,193,397	3/1980	Tucker et al.	604/83 X
4,410,321	10/1983	Pearson et al.	604/56
4,467,588	8/1984	Carveth	53/425
4,474,575	10/1984	Eckenhoff et al.	604/131
4,606,734	8/1986	Larkin et al.	604/84
4,668,231	5/1987	deVries et al.	604/891
4,936,445	6/1990	Grabenkort	206/219
4,968,301	11/1990	diPalma et al.	604/132
4,969,873	11/1990	Steinbach et al.	604/93

Primary Examiner—C. Fred Rosenbaum
Assistant Examiner—Corrine Maglione
Attorney, Agent, or Firm—James E. Brunton

[57] **ABSTRACT**

An apparatus for accurately infusing medicinal agents into an ambulatory patient at specific rates over extended periods of time. The apparatus is of a compact, low profile, laminate construction and includes either an elastic distendable membrane, or a thin barrier member which, in cooperation with a thin planar base defines a fluid chamber having a fluid outlet. The apparatus includes an internal stored energy source which functions to controllably expel the medicinal agents from the apparatus. The stored energy source may comprise either a distendable elastomeric membrane or an expandable sponge like cellular mass.

14 Claims, 15 Drawing Sheets

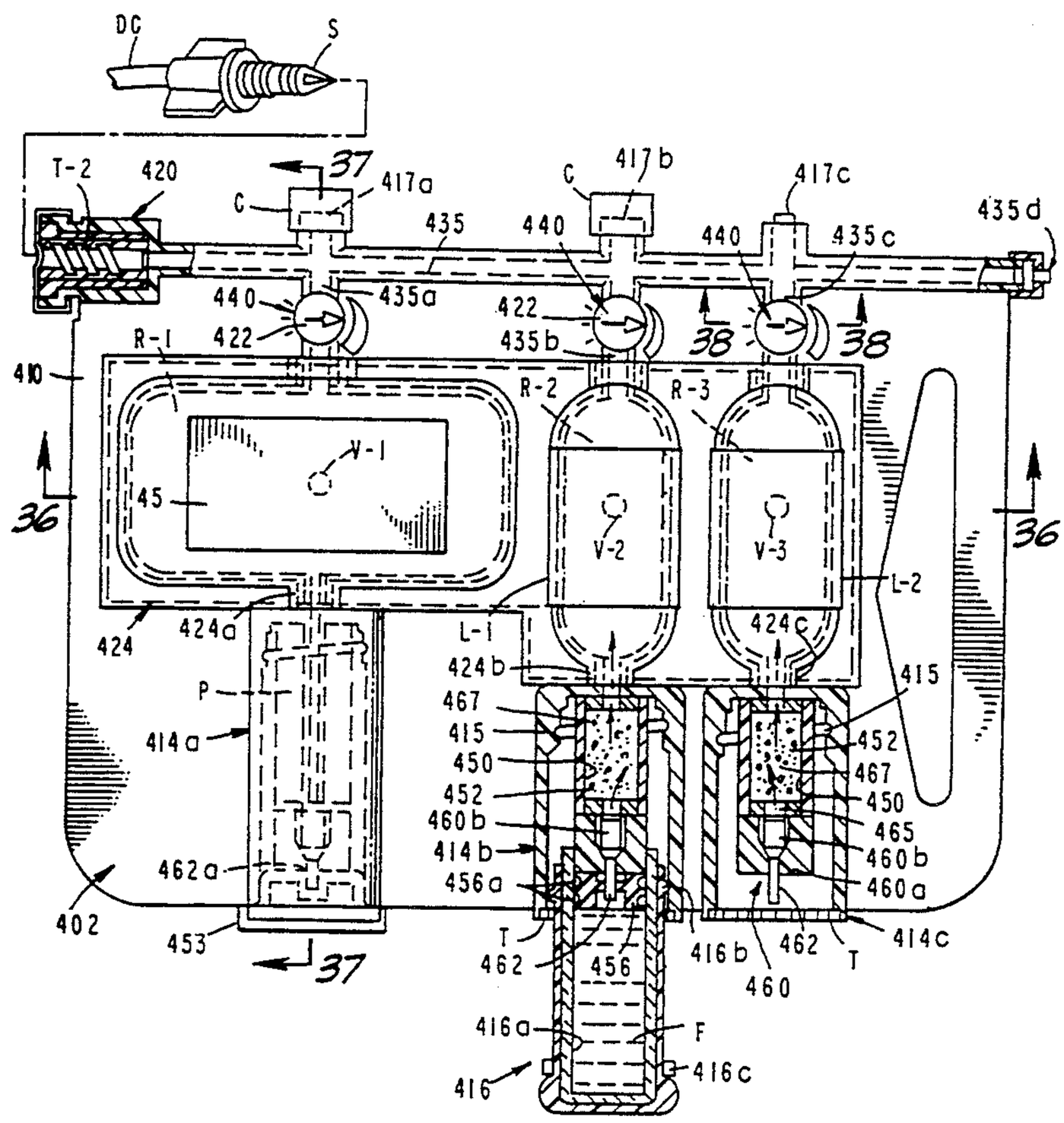

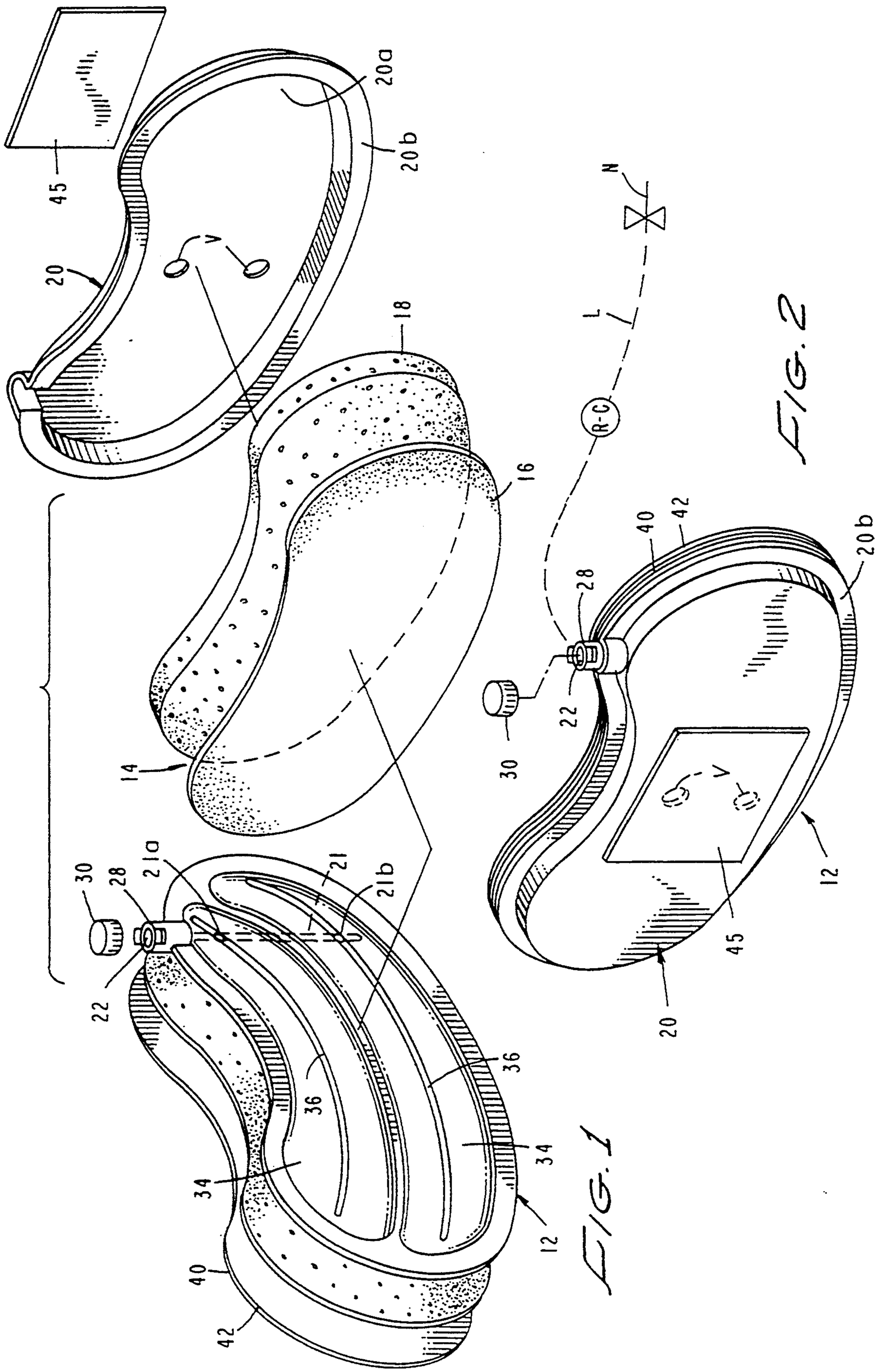
20a
20b
45
20
18
16
14
N
L
R-C
40
42
28
22
30
12
20
21a
21
21b
36
34
40
42

FIG. 2

FIG. 1

FIG. 3

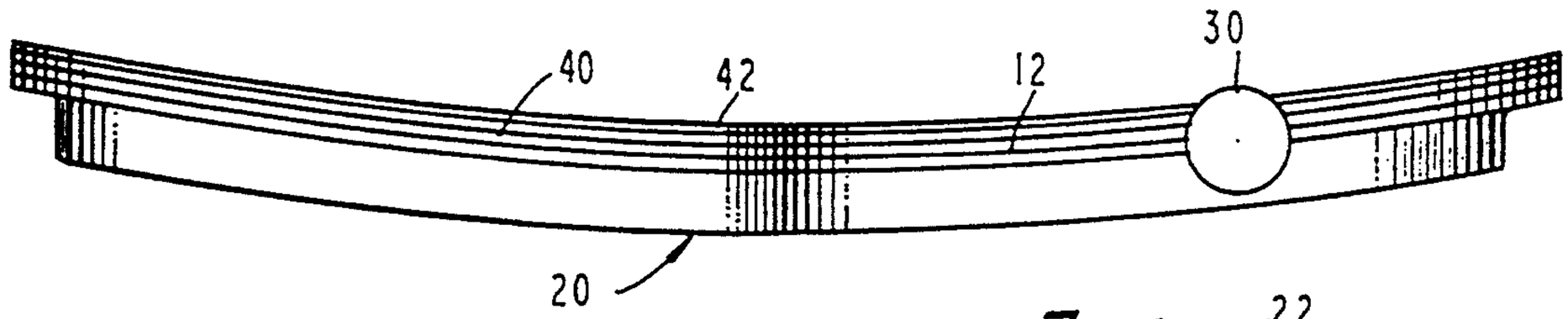

FIG. 4

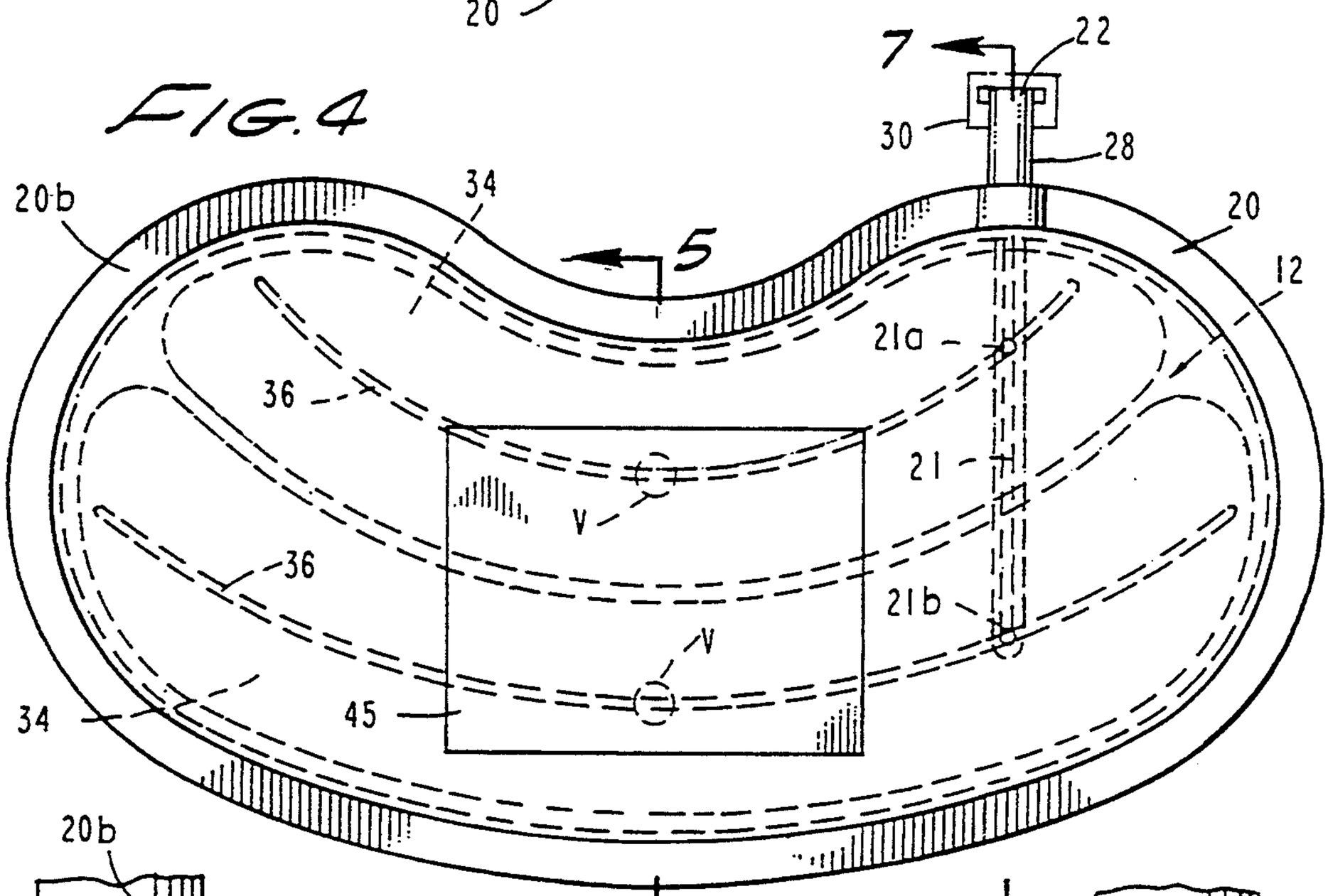

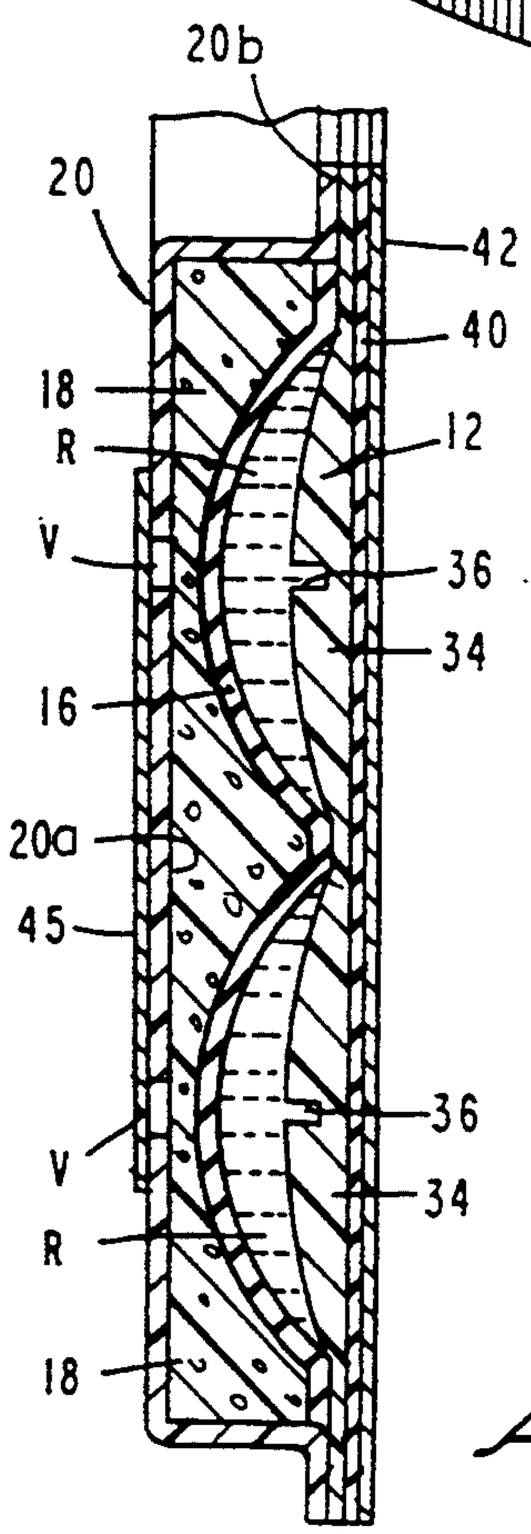

FIG. 5

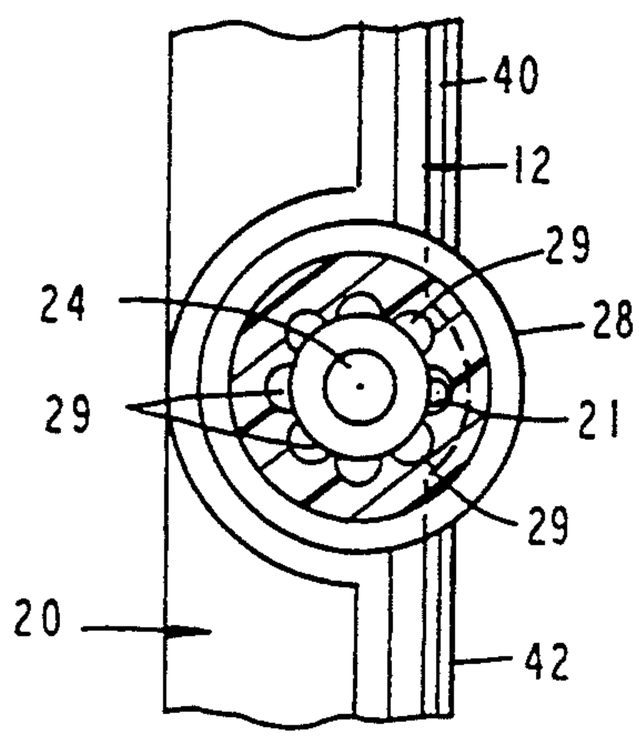

FIG. 8

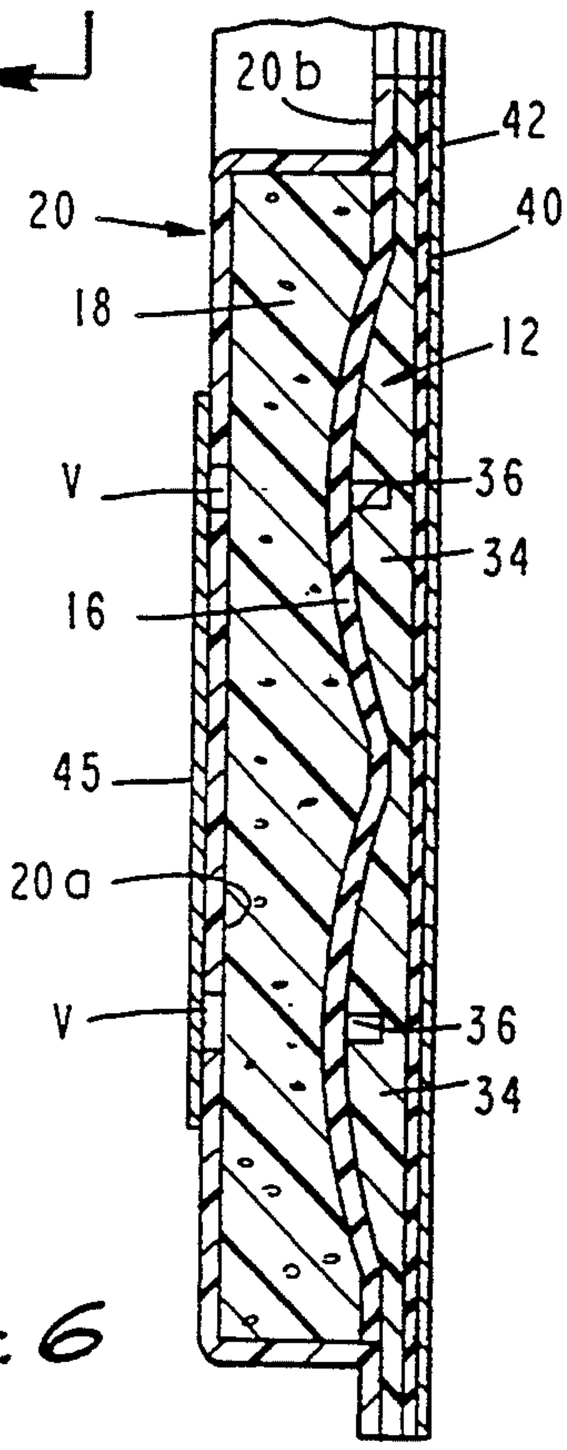

FIG. 6

FIG. 7

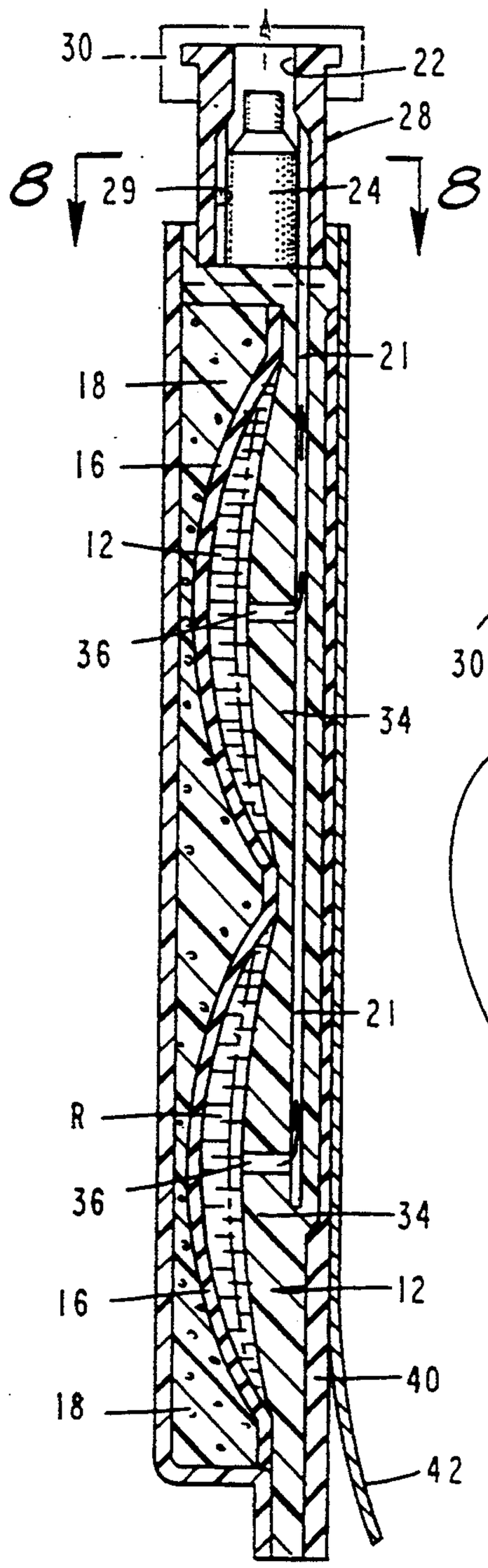

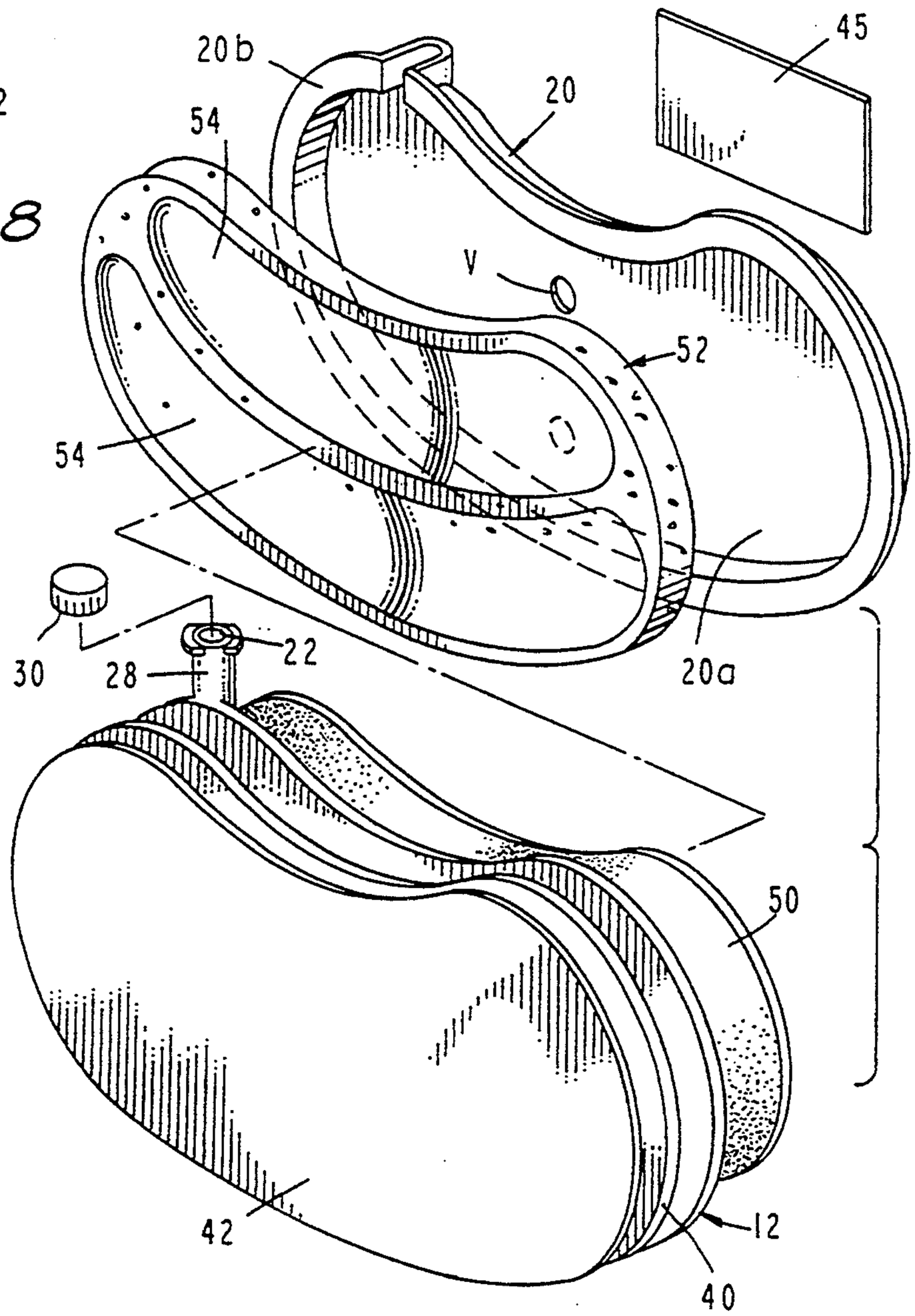

FIG. 9

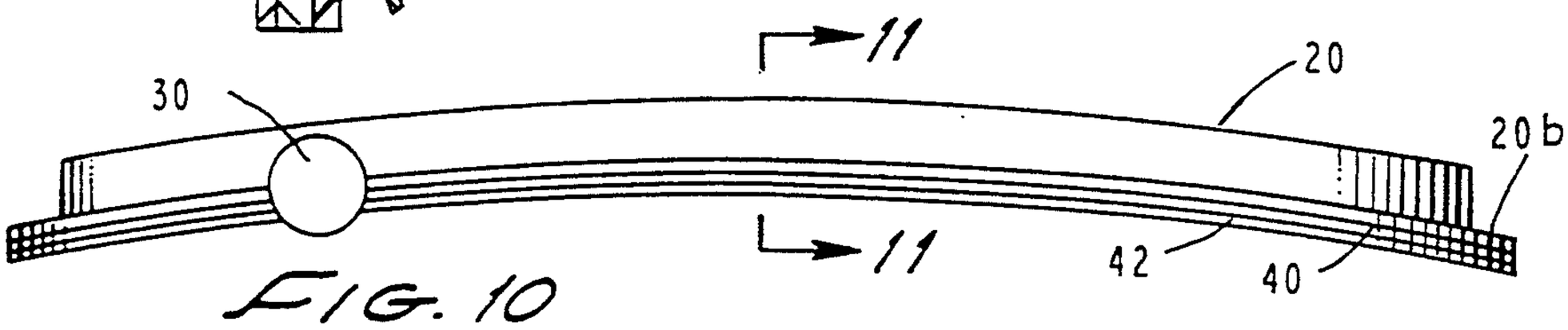

FIG. 10

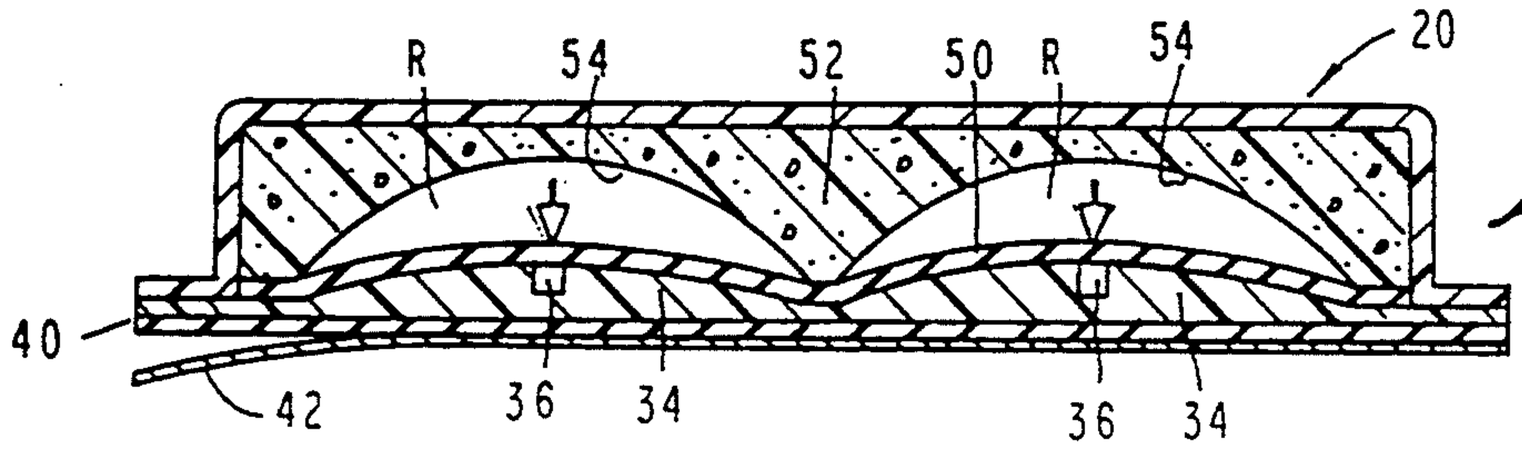

FIG. 11

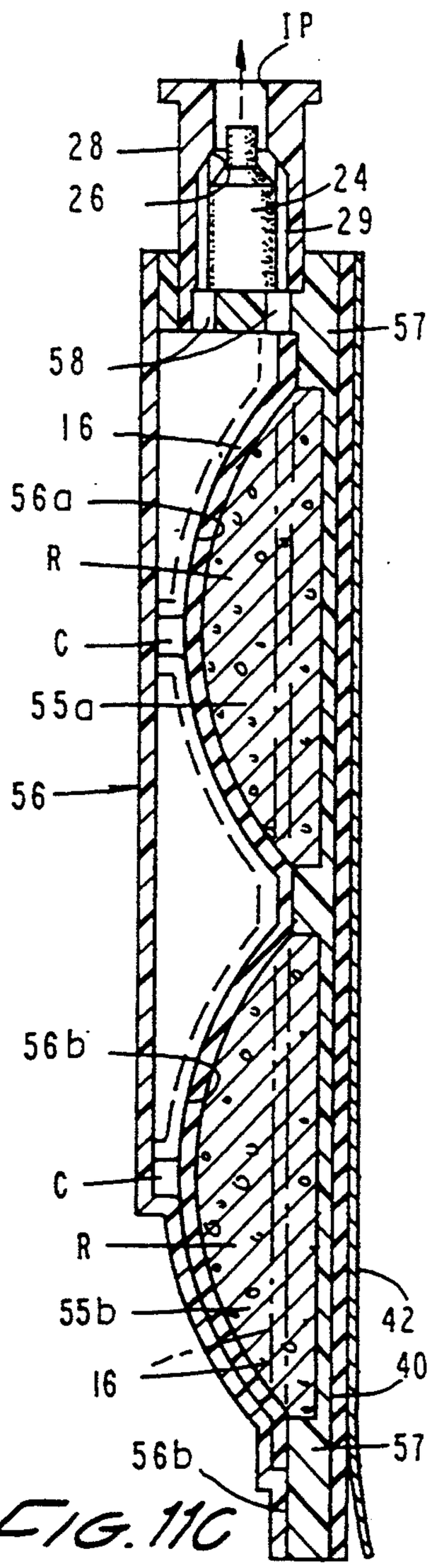

FIG. 11C

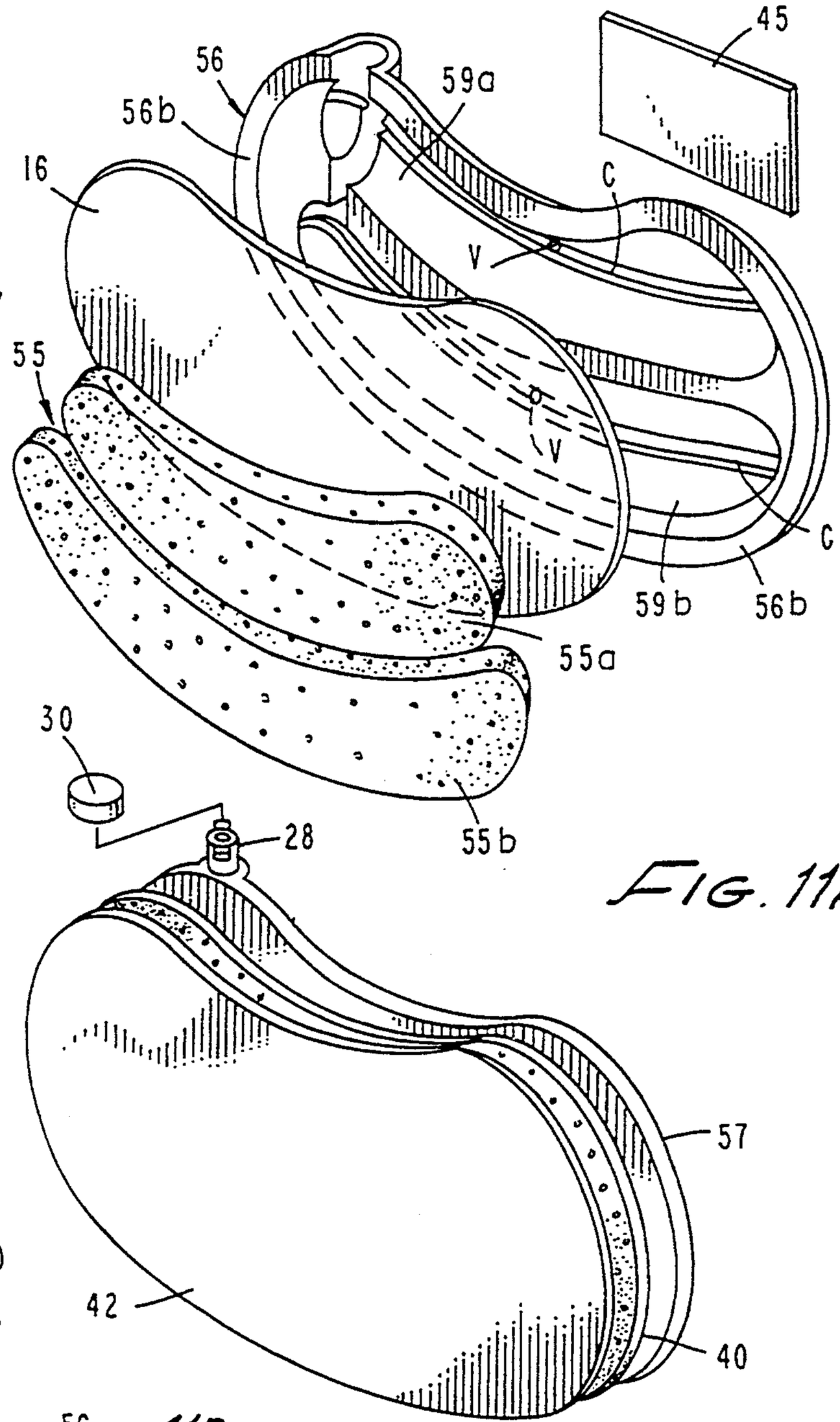

FIG. 11A

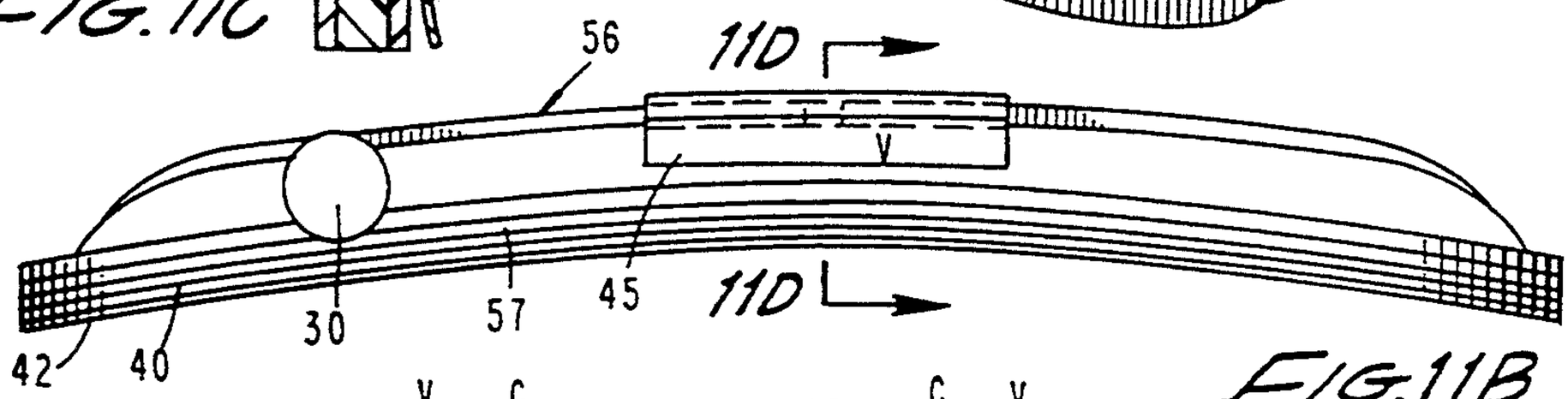

FIG. 11B

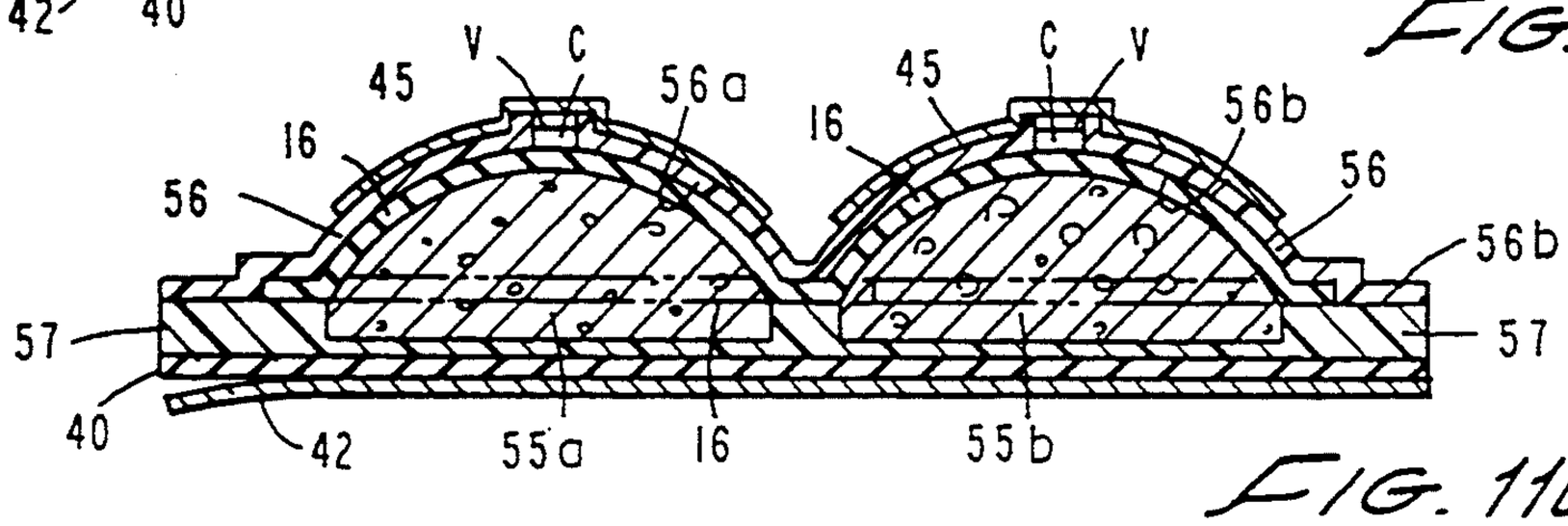

FIG. 11D

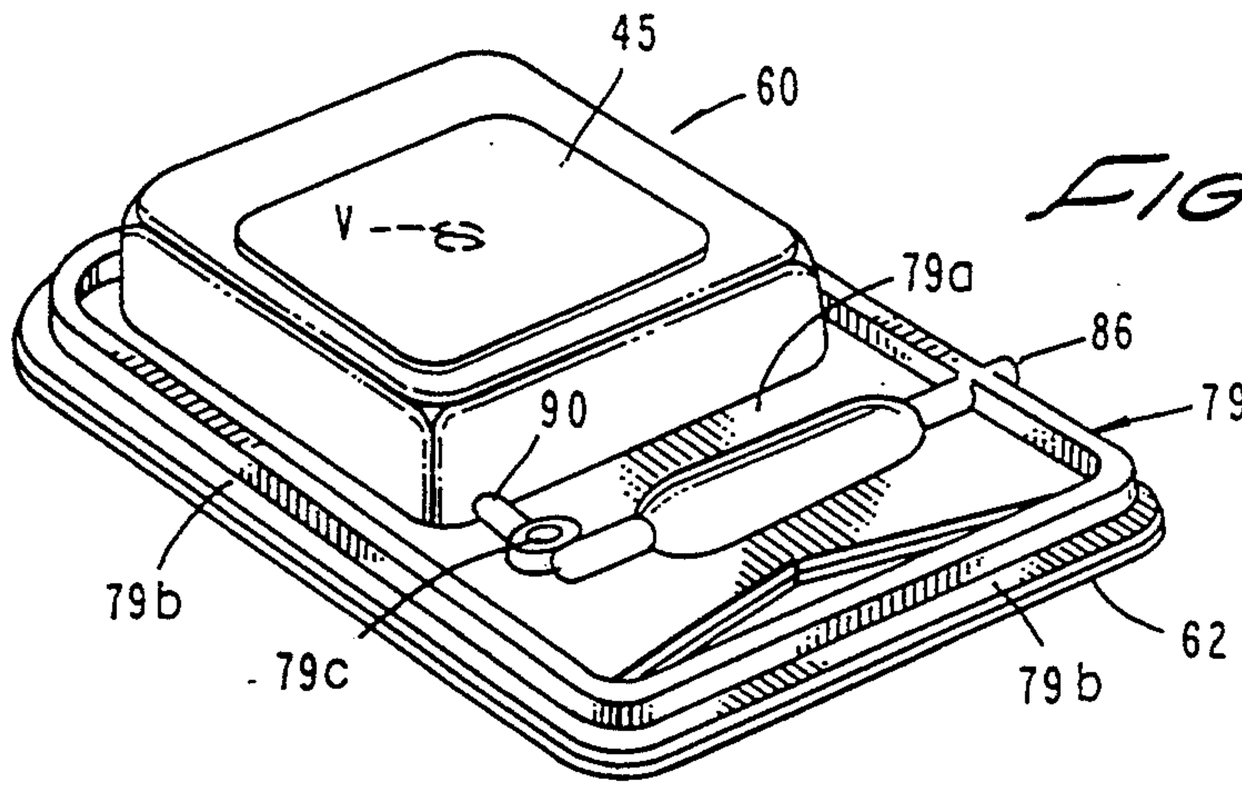

FIG. 13

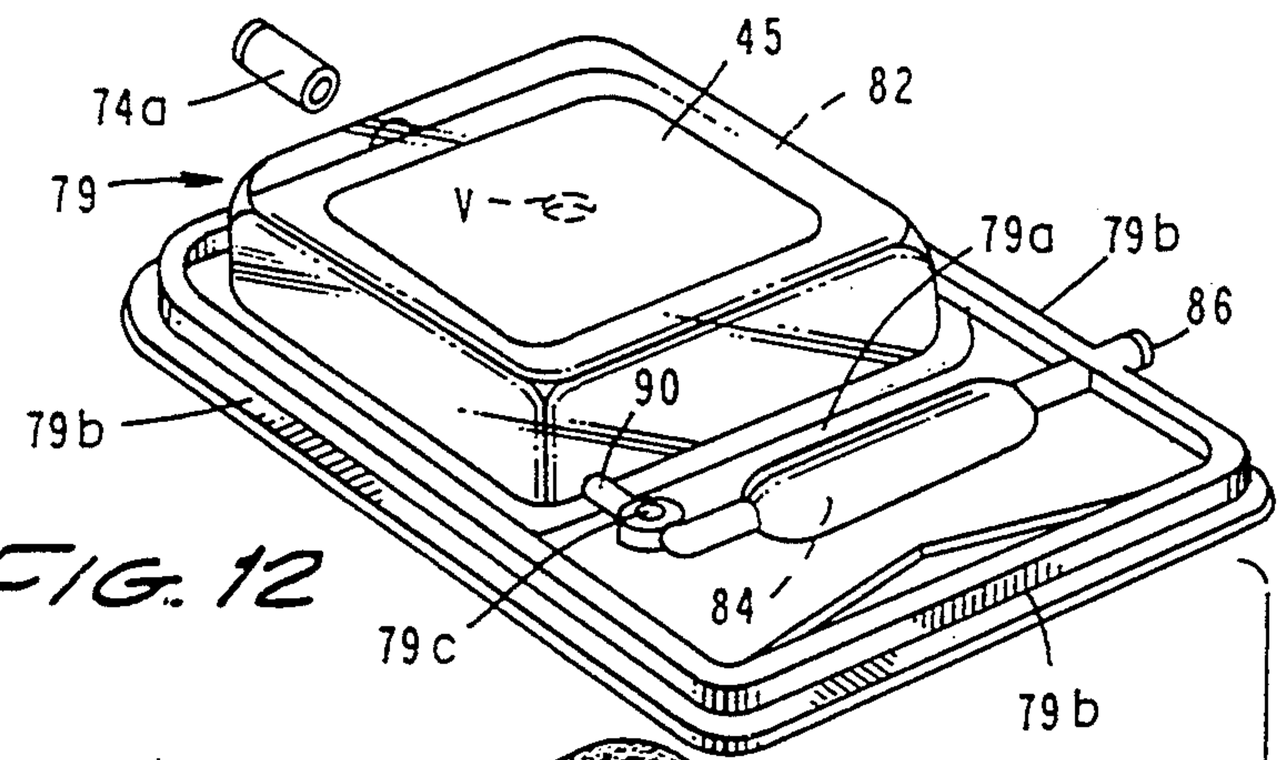

FIG. 12

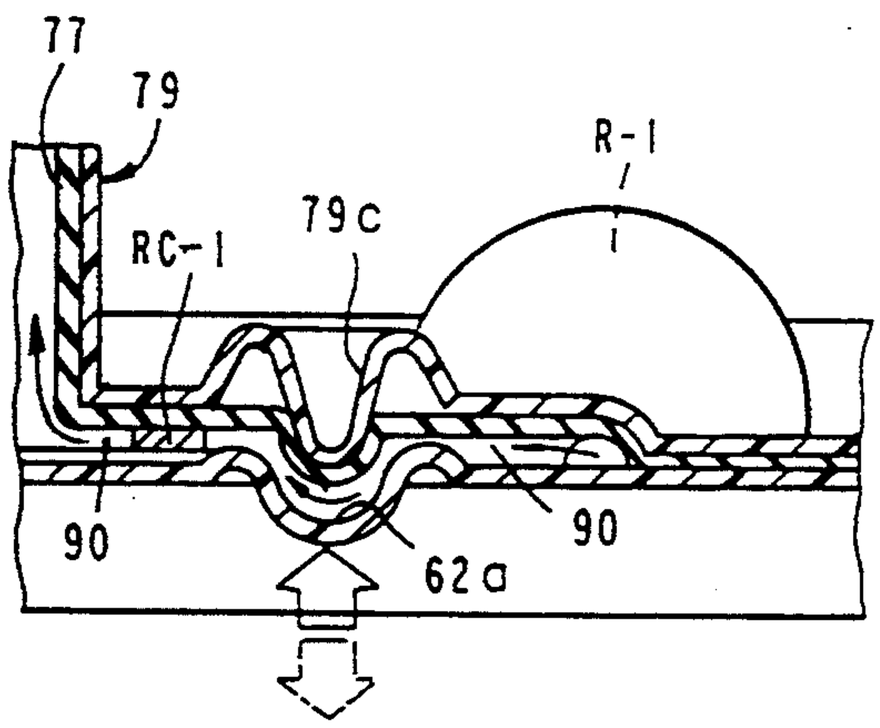

FIG. 18

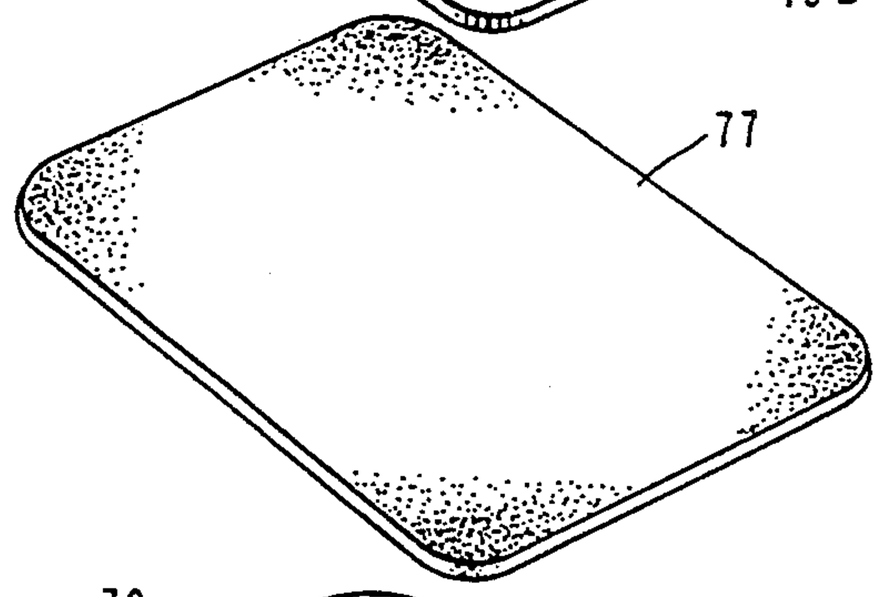

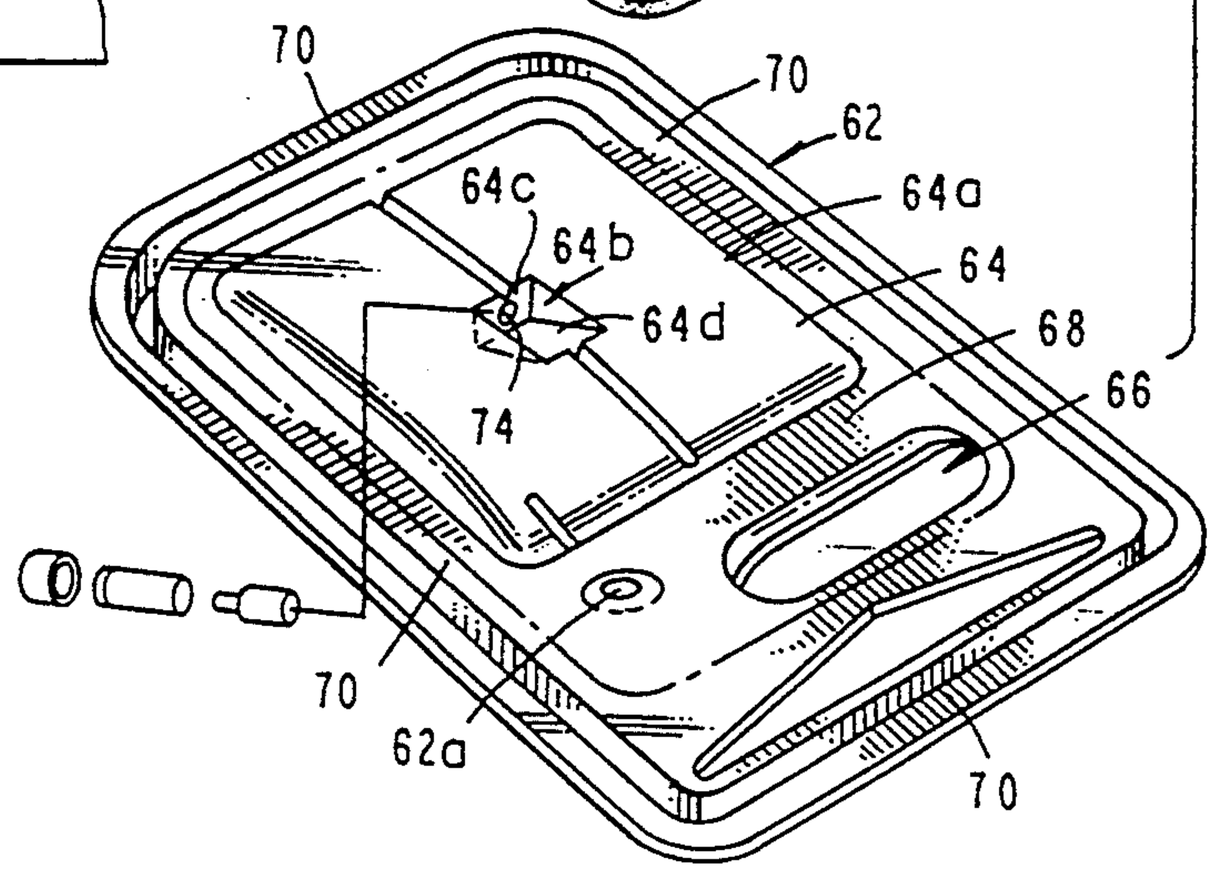

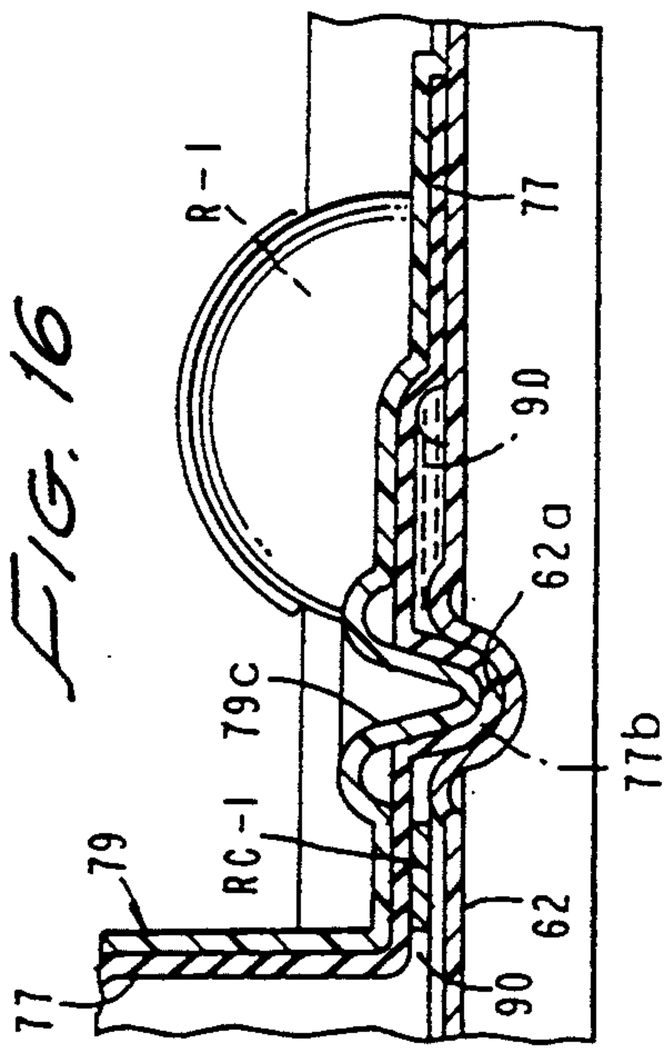

FIG. 16

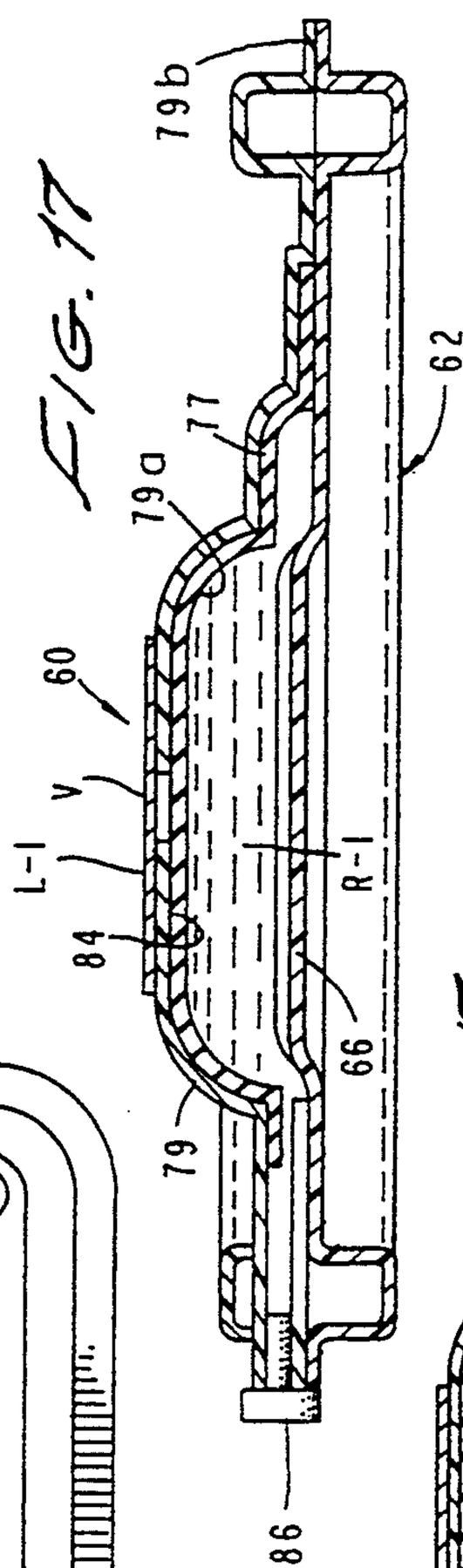

FIG. 17

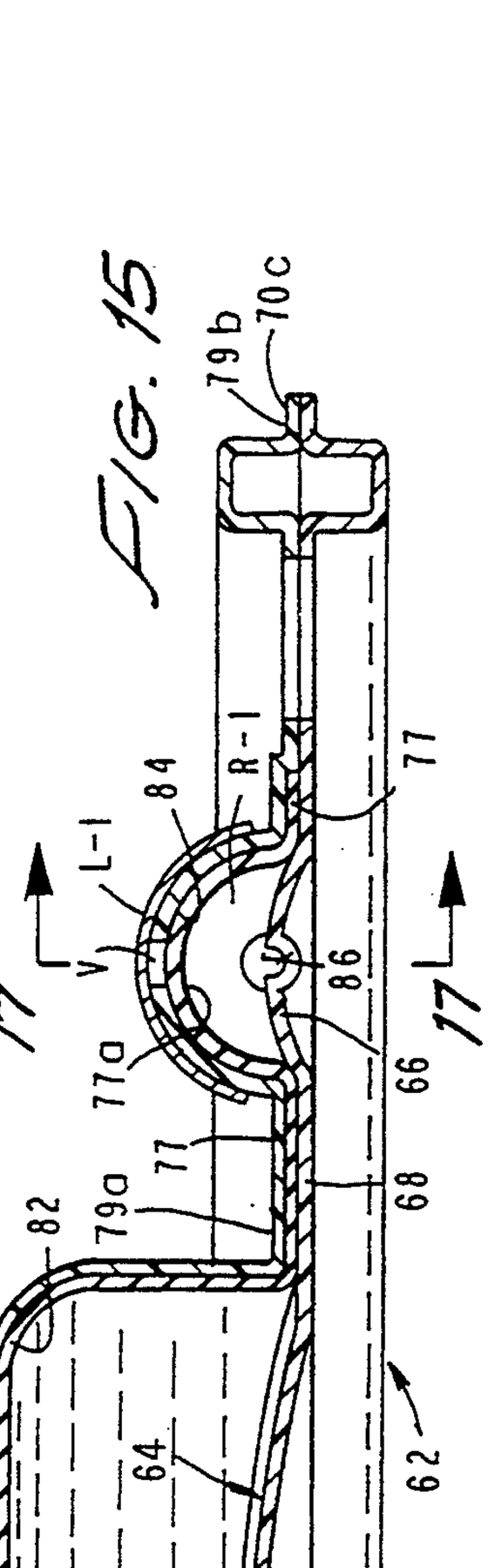

FIG. 15

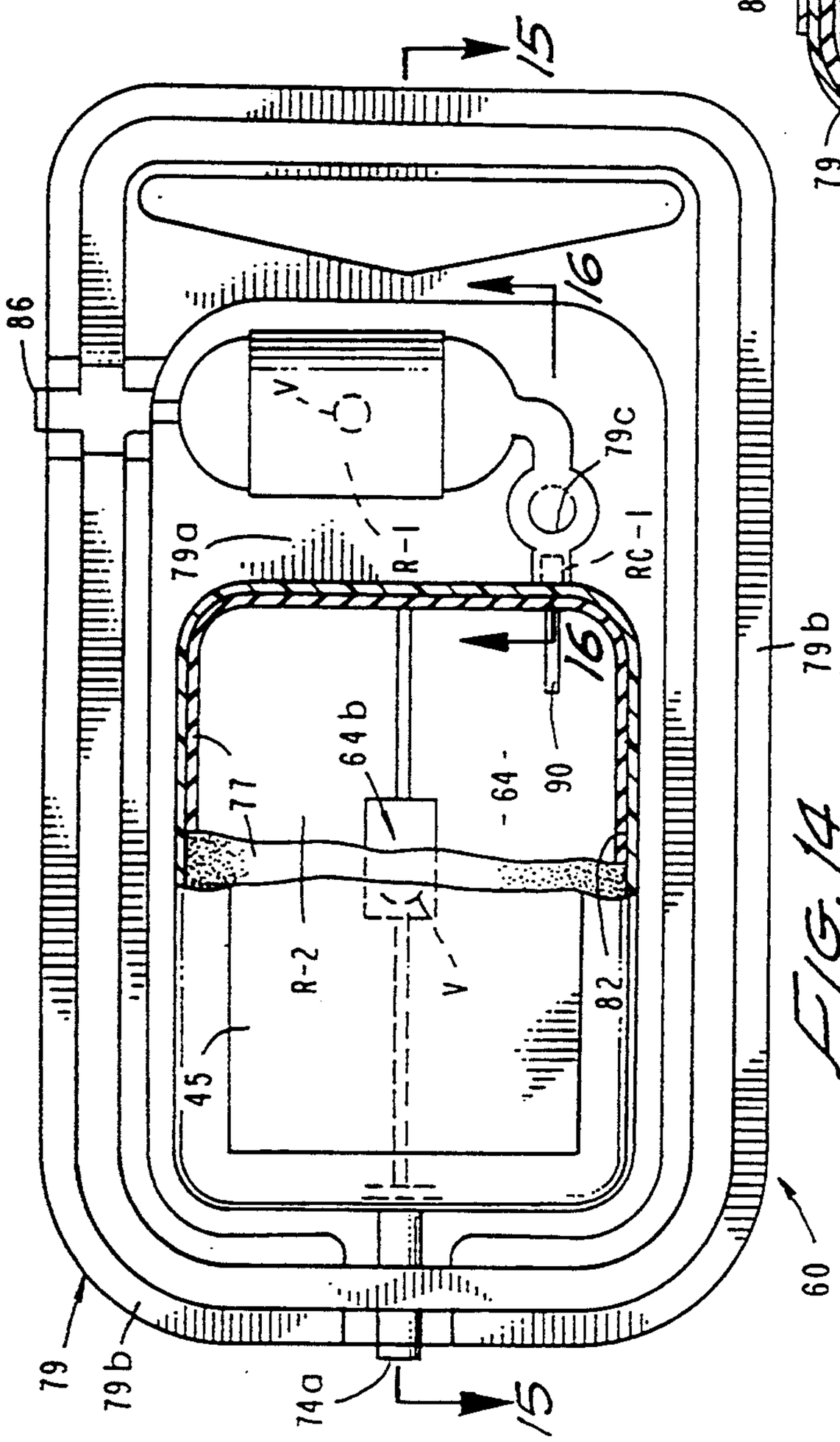

FIG. 14

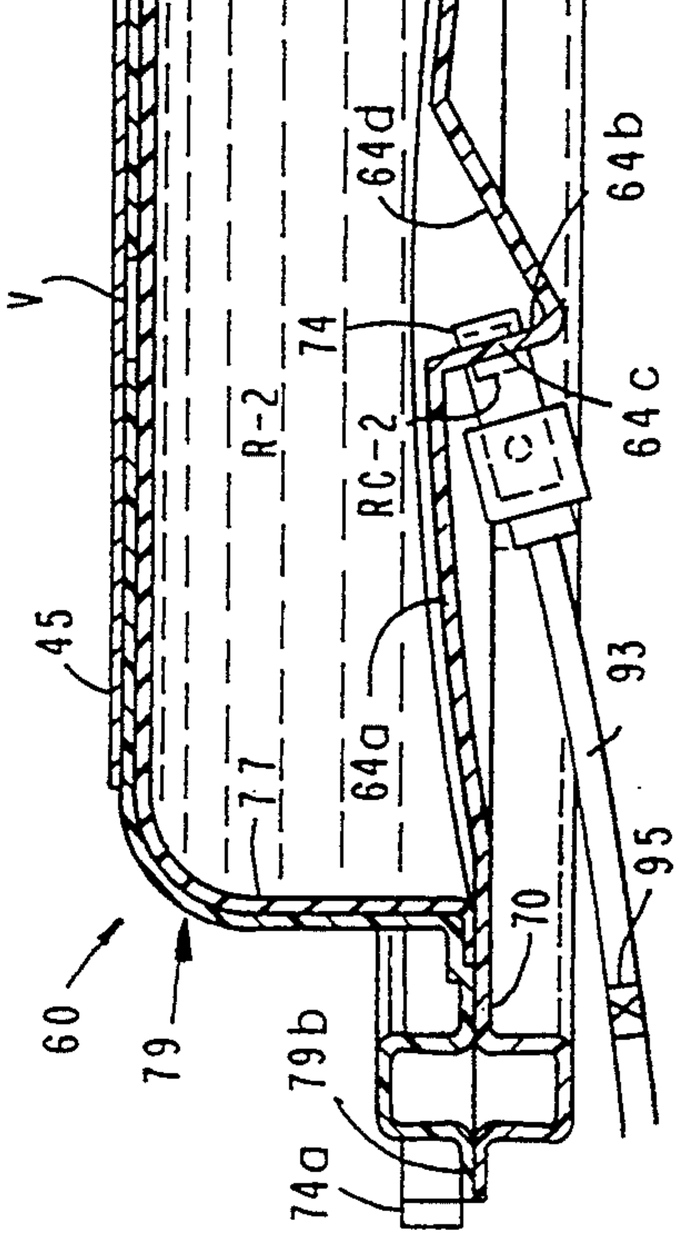

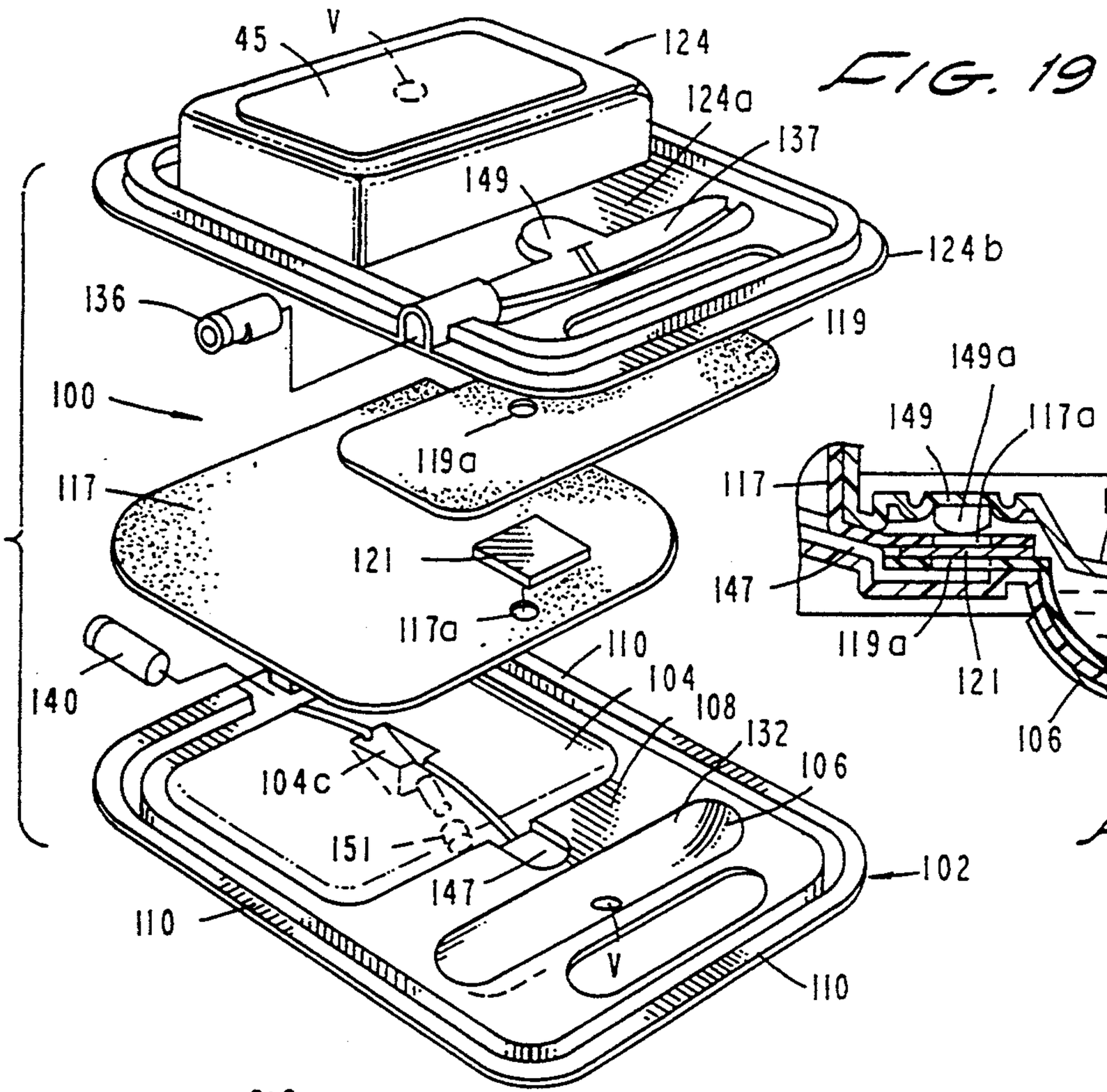

FIG. 19

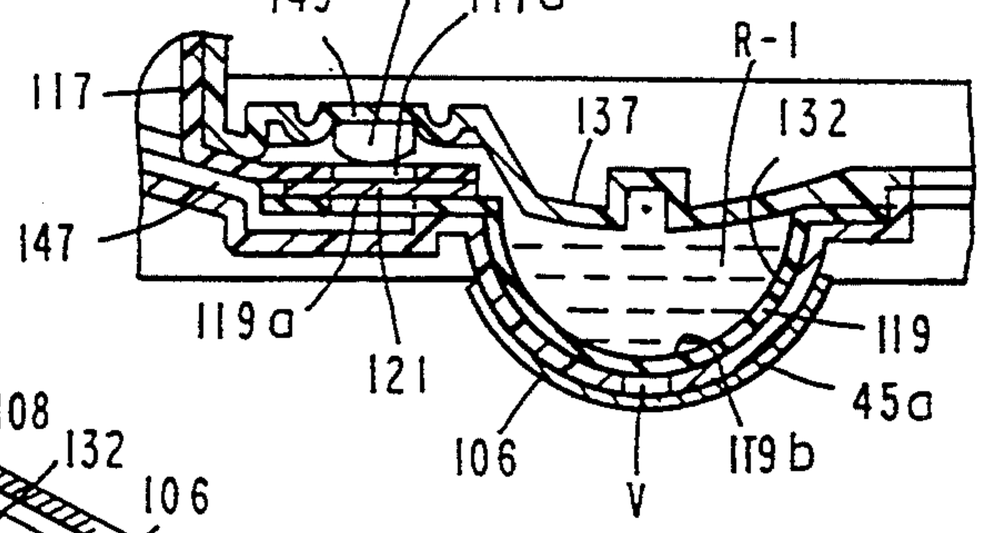

FIG. 21A

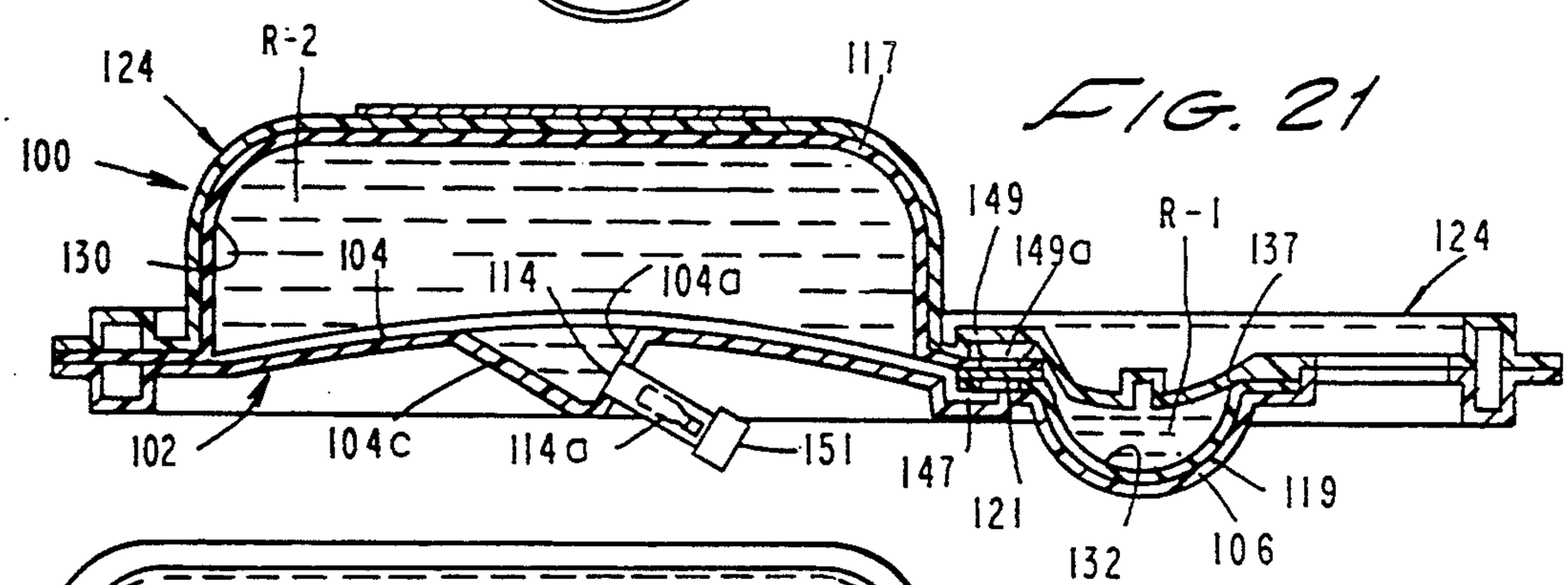

FIG. 21

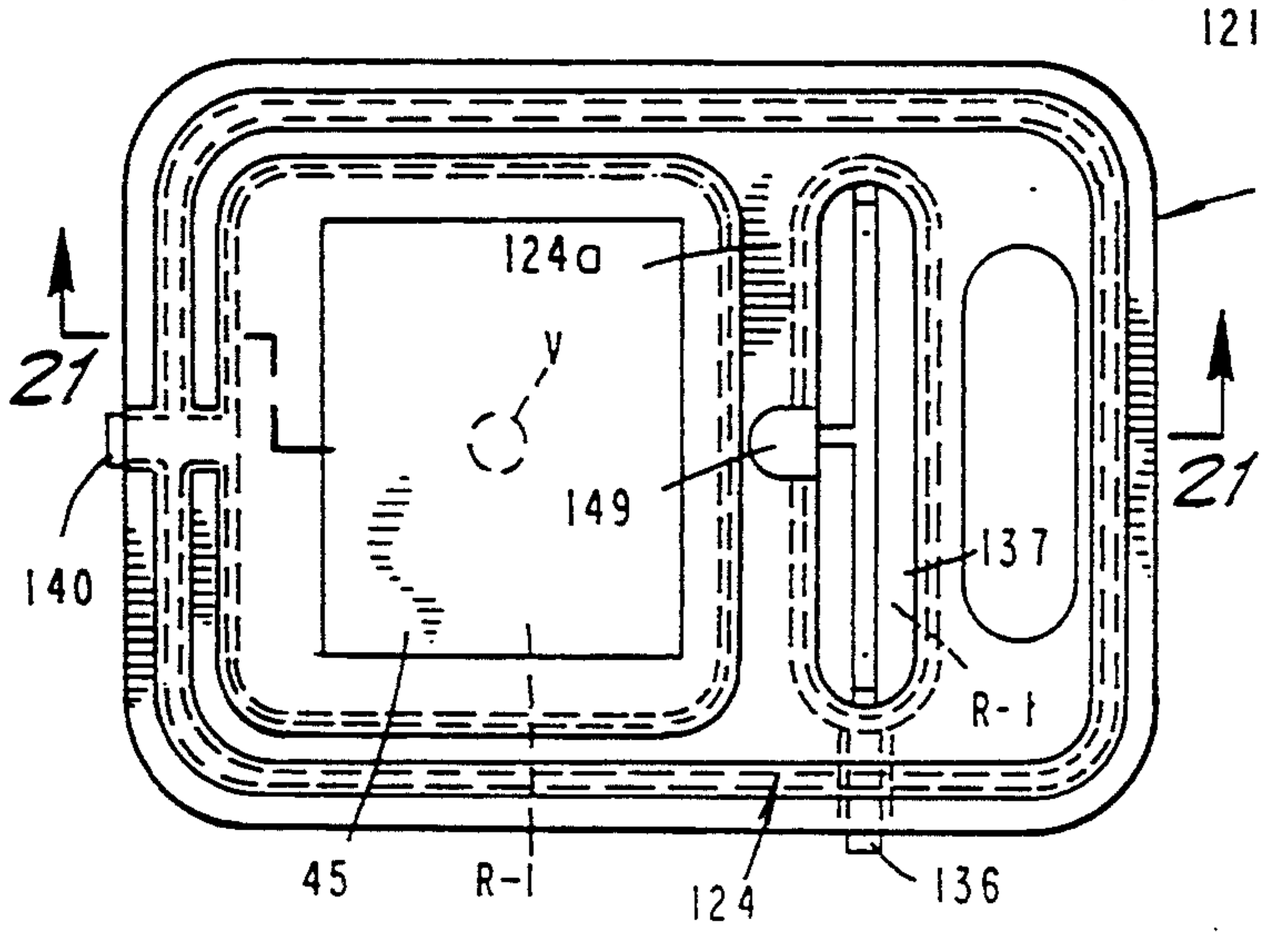

FIG. 20

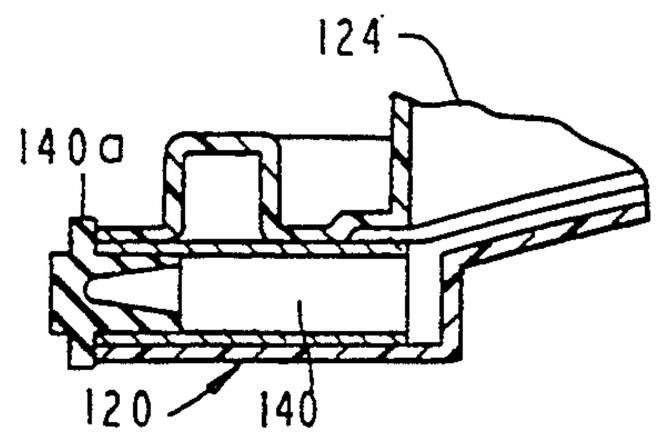

FIG. 21B

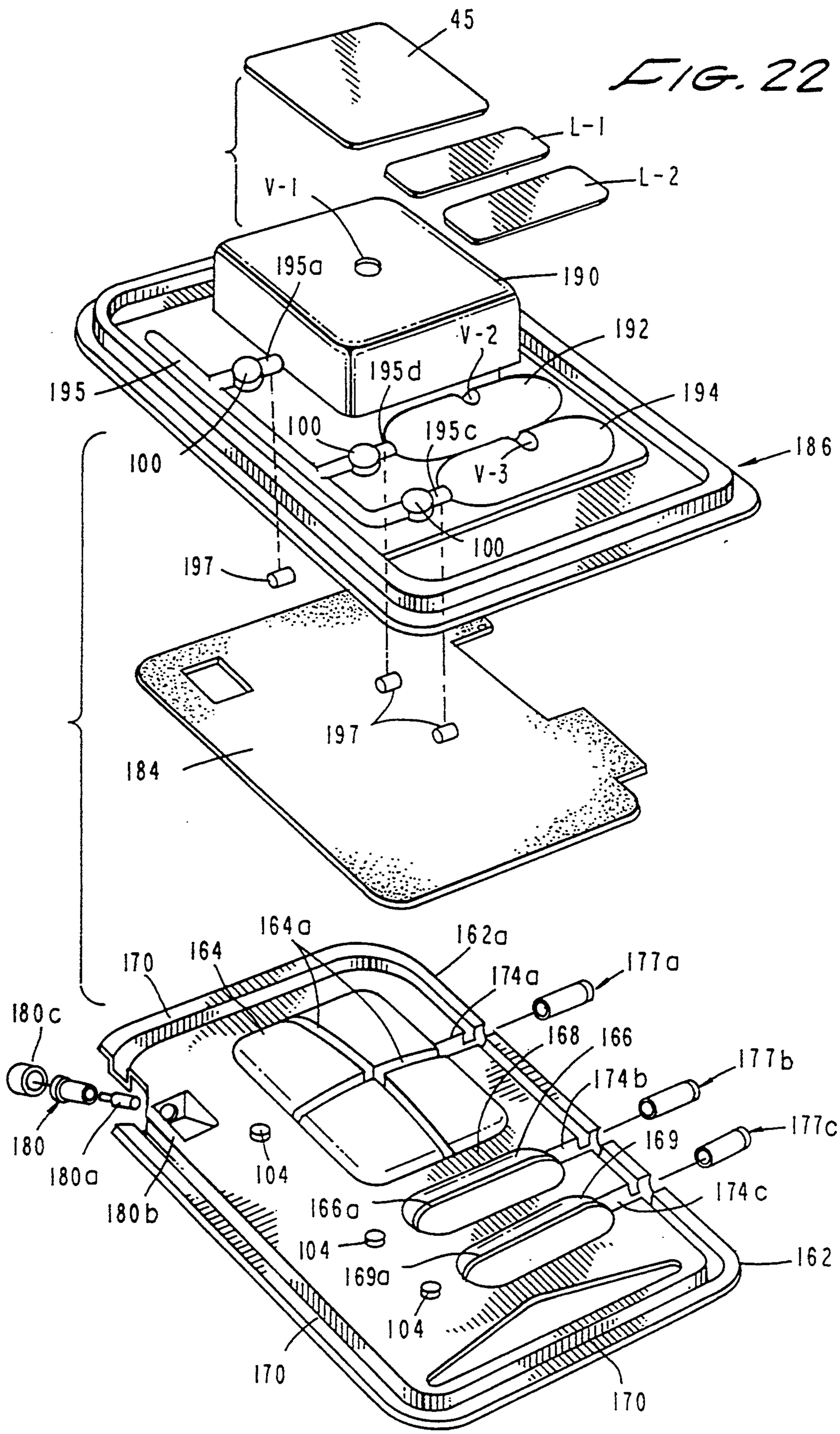
FIG. 22
45
L-1
L-2
V-1
195a
190
192
V-2
195d
195
194
100
195c
186
100
V-3
100
197
197
184
164a
162a
170
164
174a
177a
180c
168
166
177b
174b
180
177c
169
180a
104
174c
180b
166a
104
162
169a
104
170
170

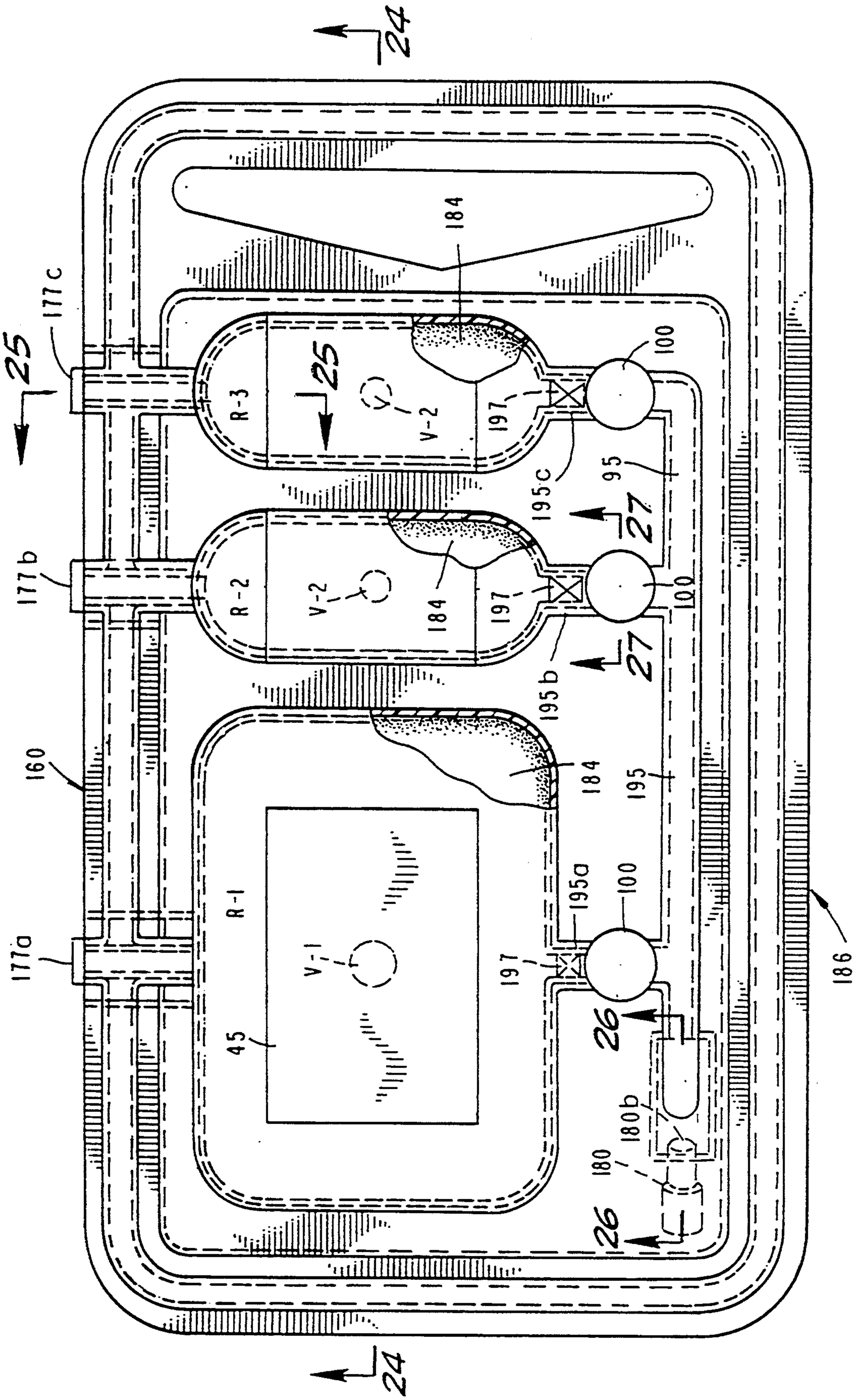
24
177c
25
177b
160
177a
R-3
R-2
R-1
V-2
V-2
V-1
184
184
184
197
197
197
195c
195b
195
195a
100
100
100
95
27
27
26
26
180b
180
45
186
24

FIG. 23

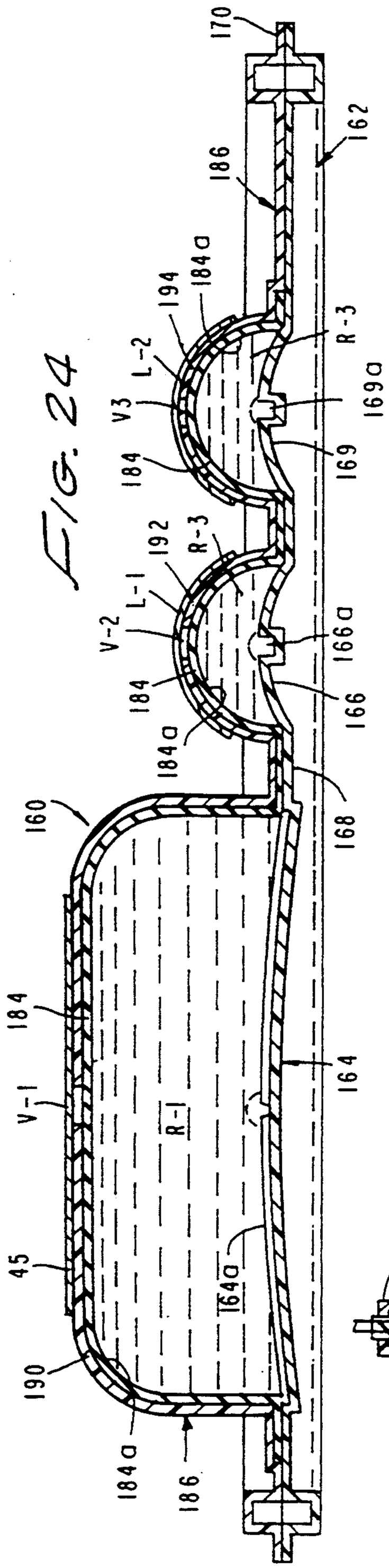

FIG. 24

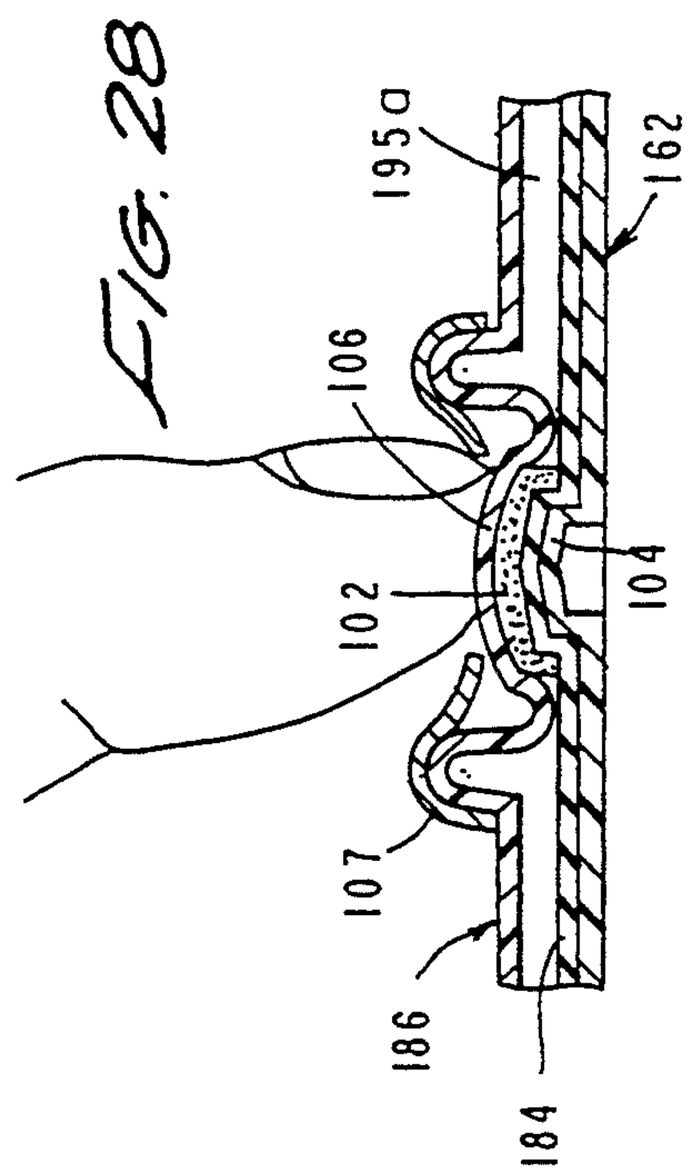

FIG. 28

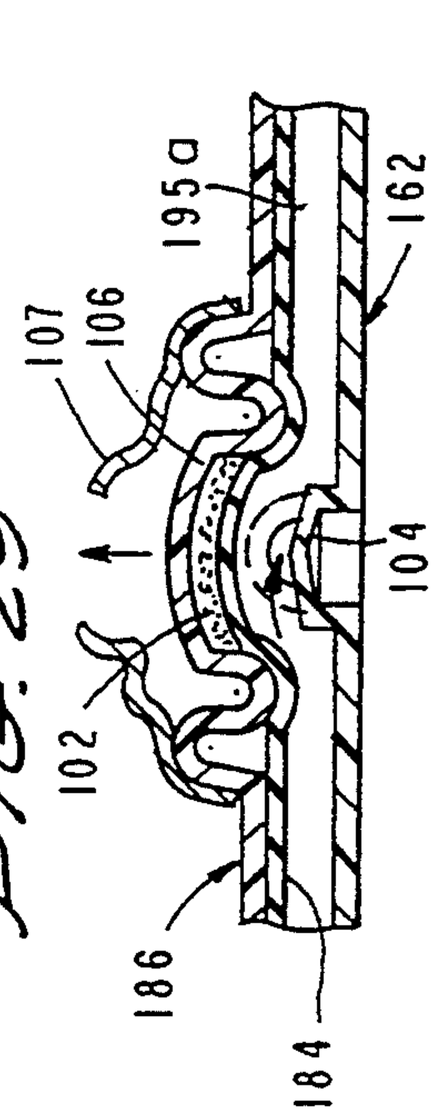

FIG. 29

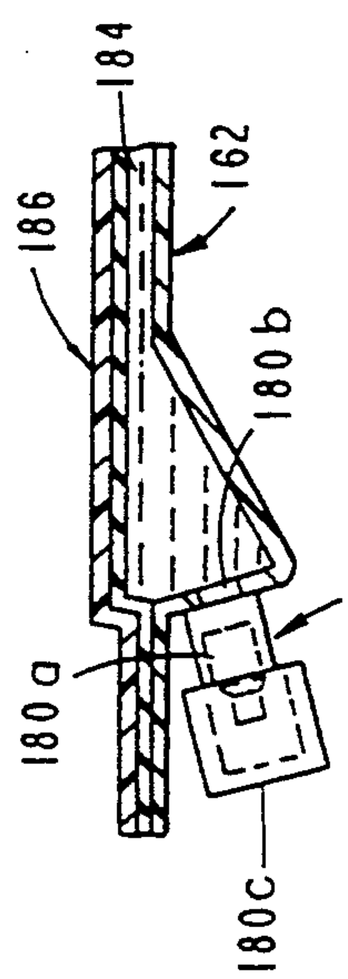

FIG. 26

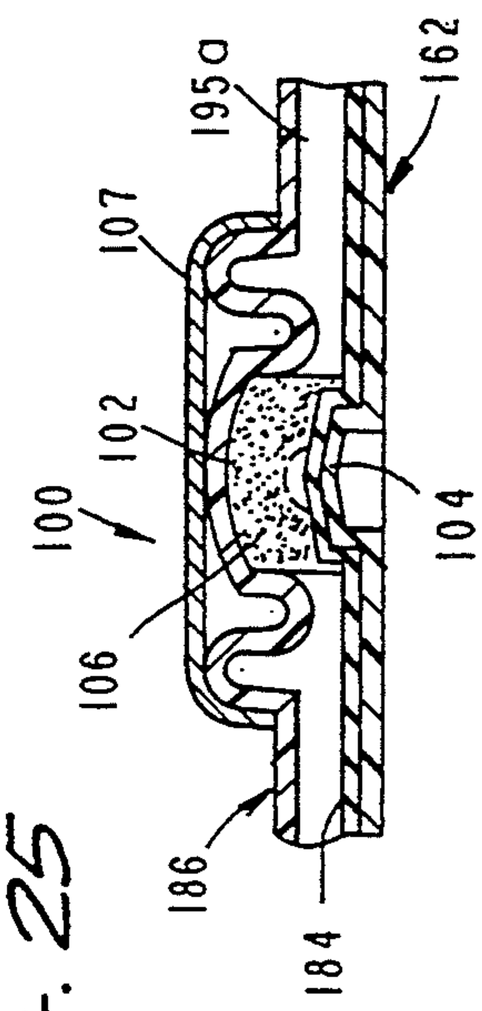

FIG. 27

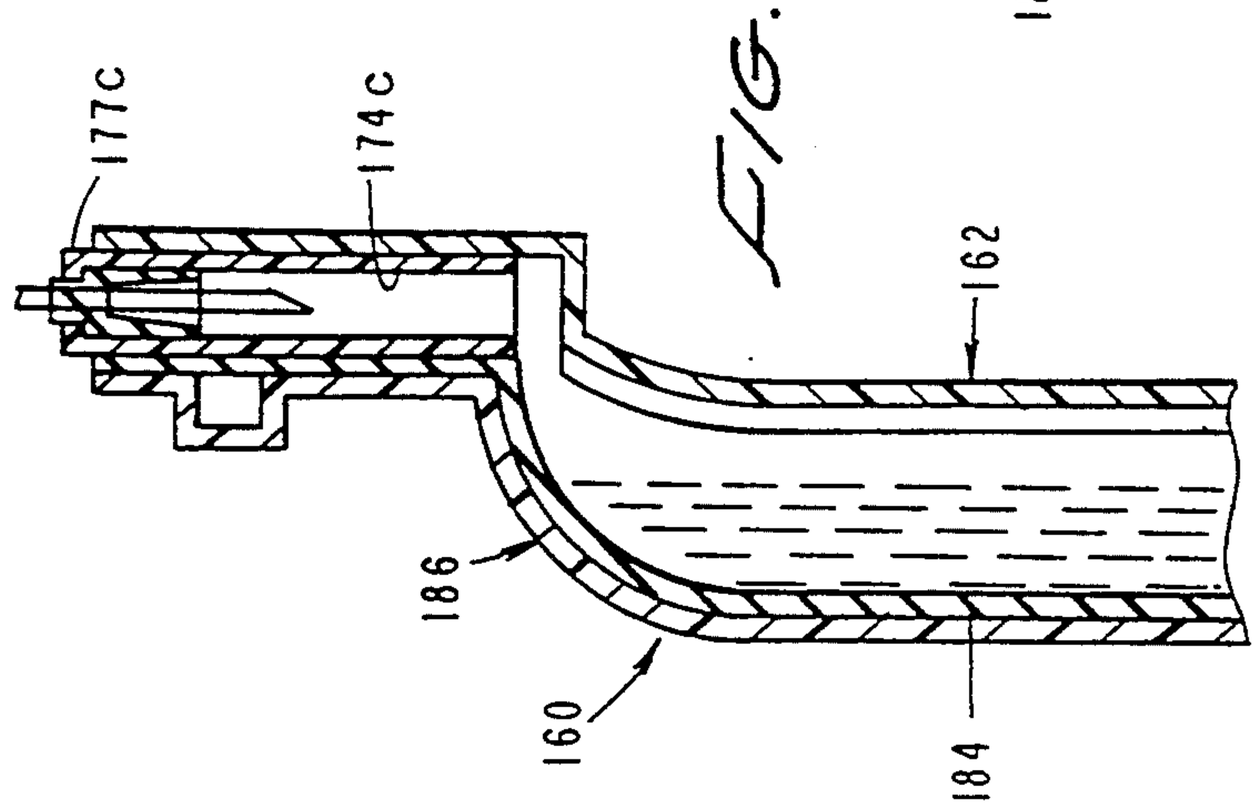

FIG. 25

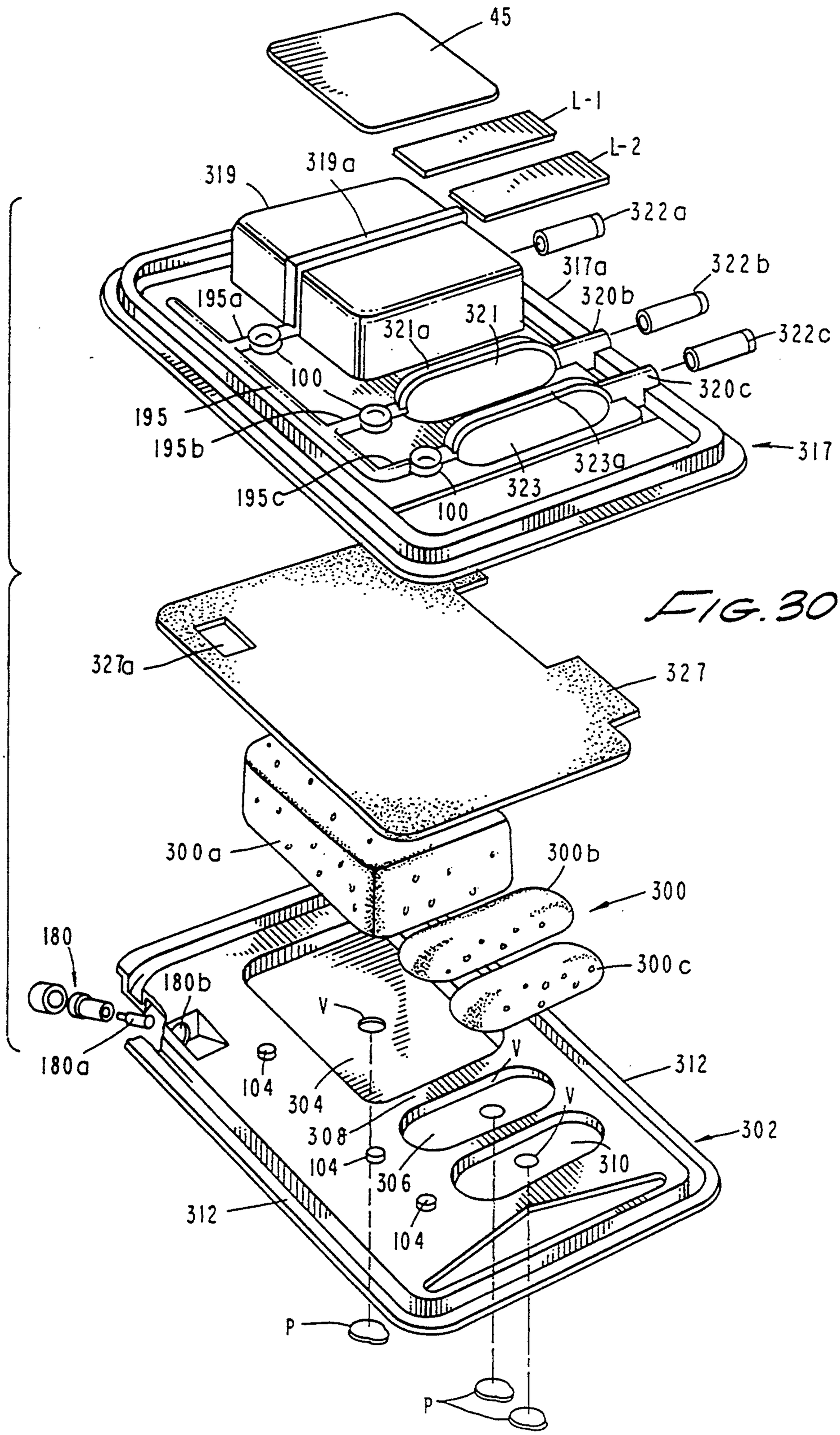
45
L-1
L-2
319
319a
322a
317a
322b
320b
195a
321
321a
322c
100
320c
195
195b
317
323a
323
195c
100
327a
327
300a
300b
300
180
180b
300c
V
180a
104
304
312
V
V
302
308
104
306
310
312
104
P
P

FIG. 30

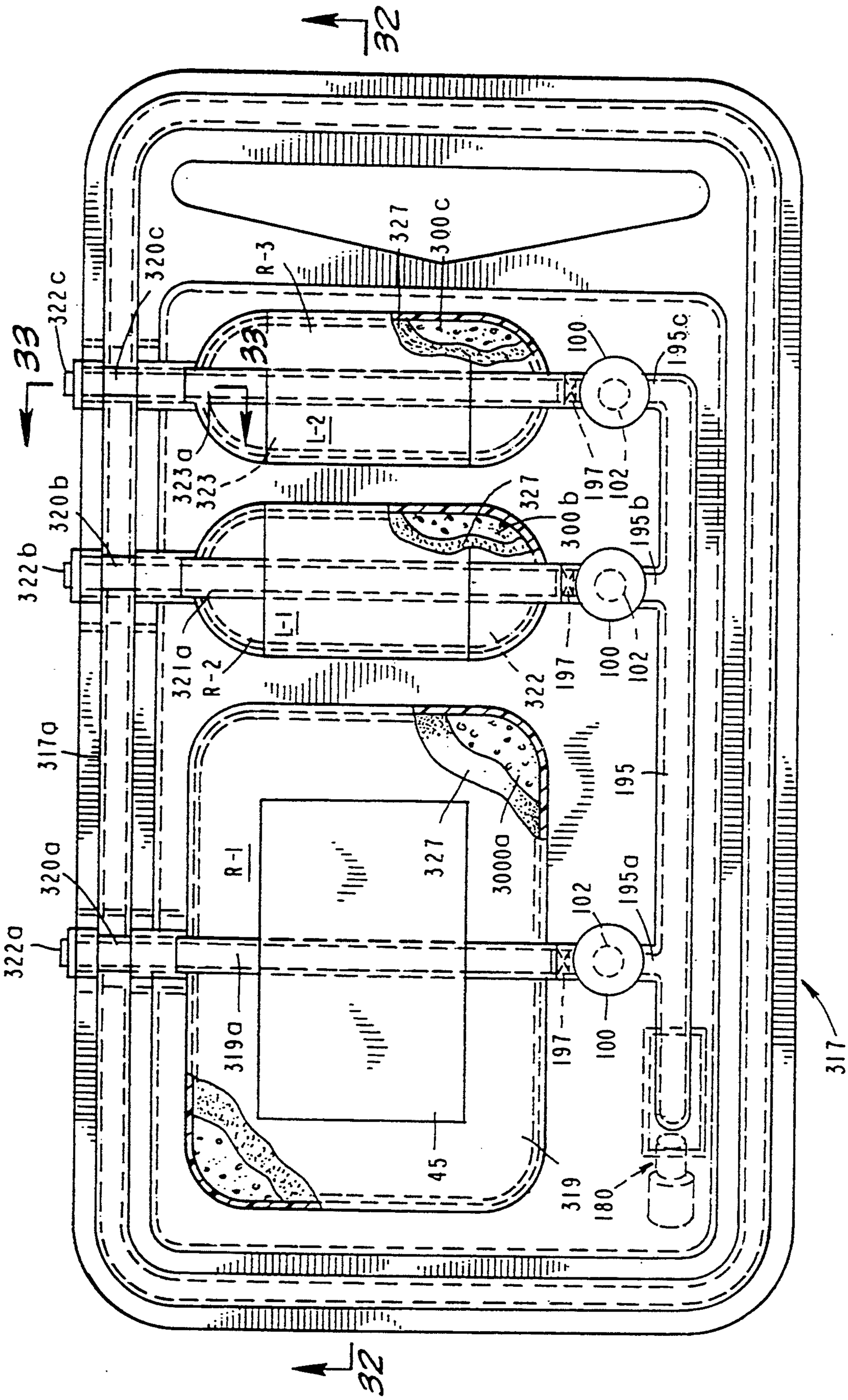
32
33
322c
320c
R-3
327
300c
100
195c
323a
323
L-2
197
102
320b
322b
327
300b
195b
321a
R-2
L-1
322
317a
195
320a
R-1
3000a
322a
319a
45
319
180
317

FIG. 31

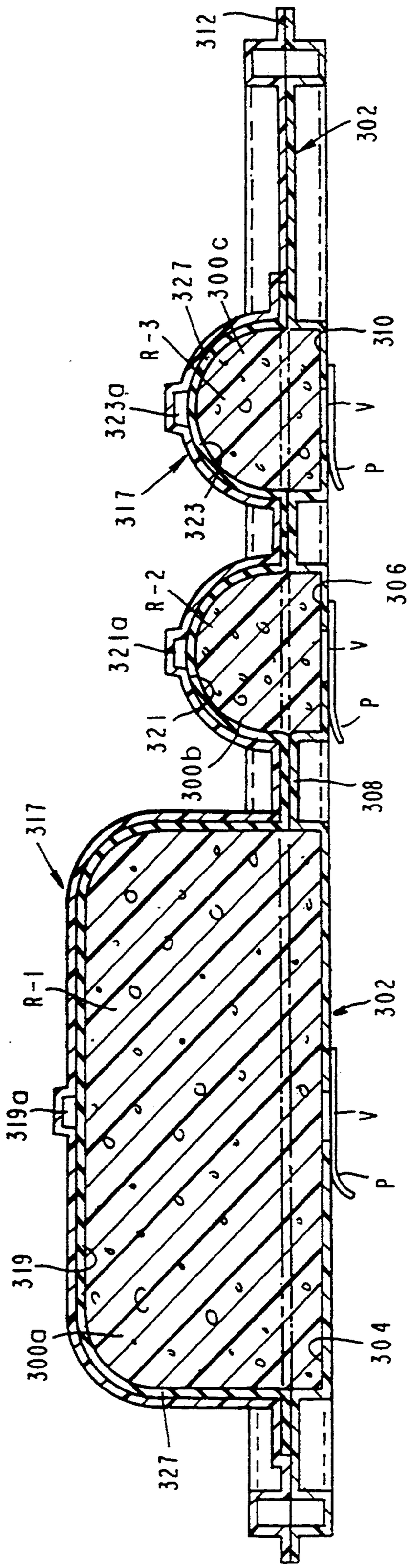

FIG. 32

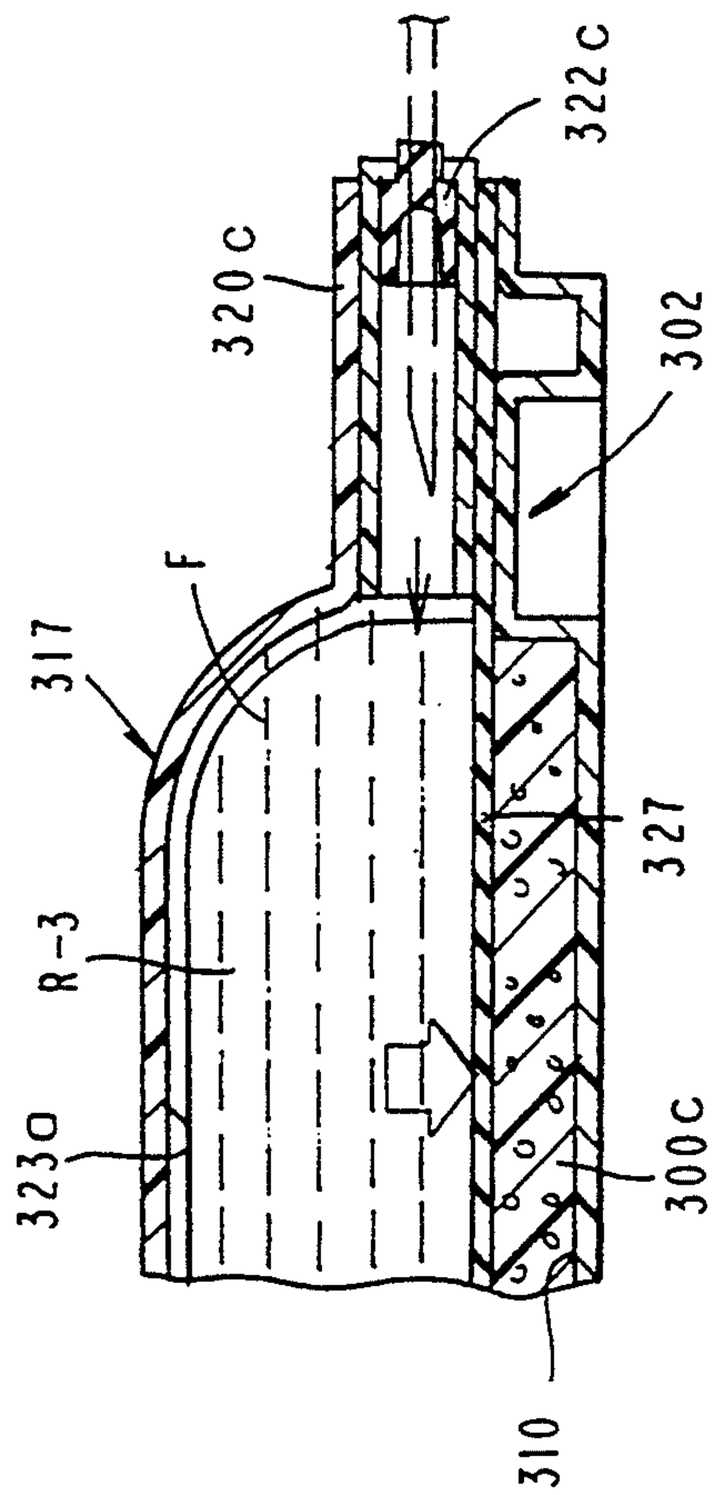

FIG. 33A

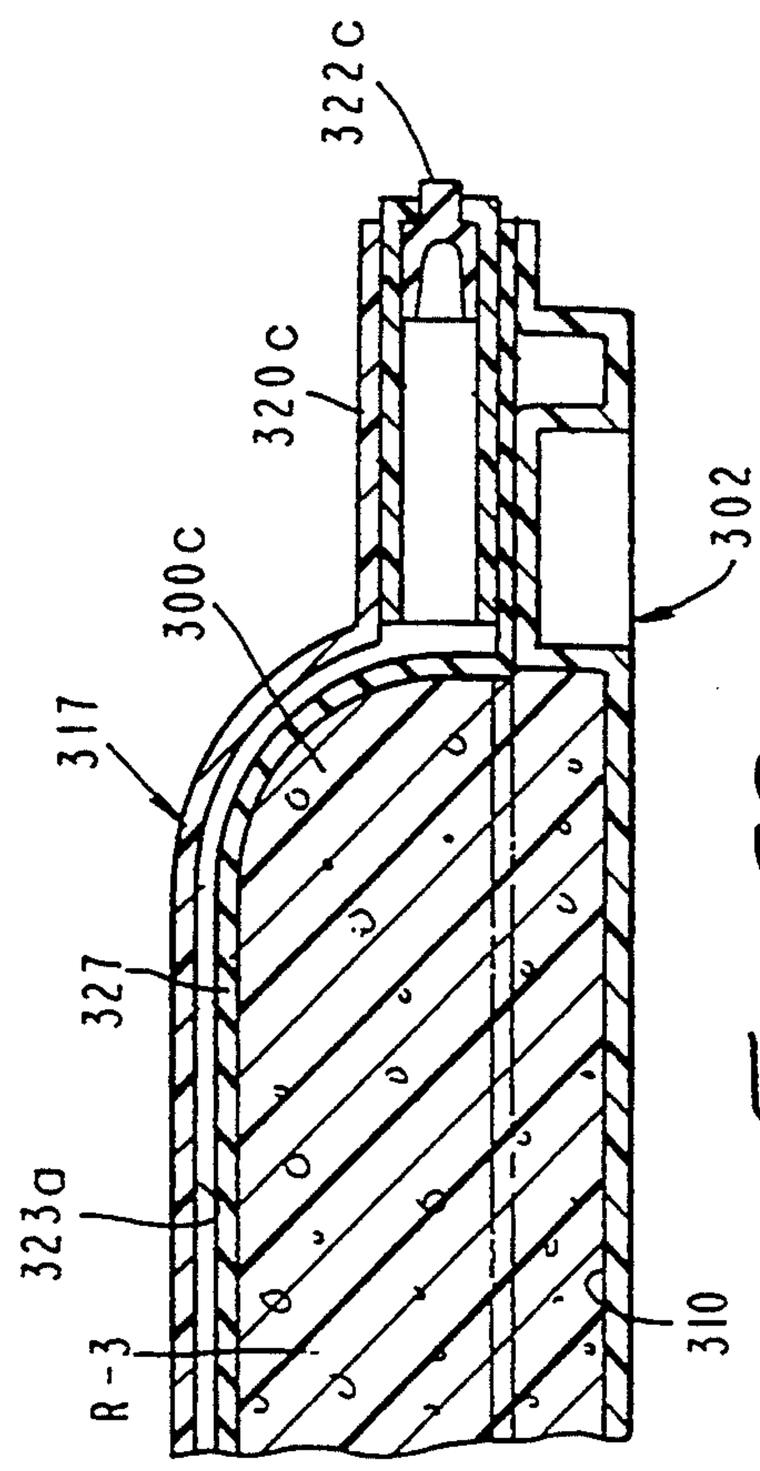

FIG. 33

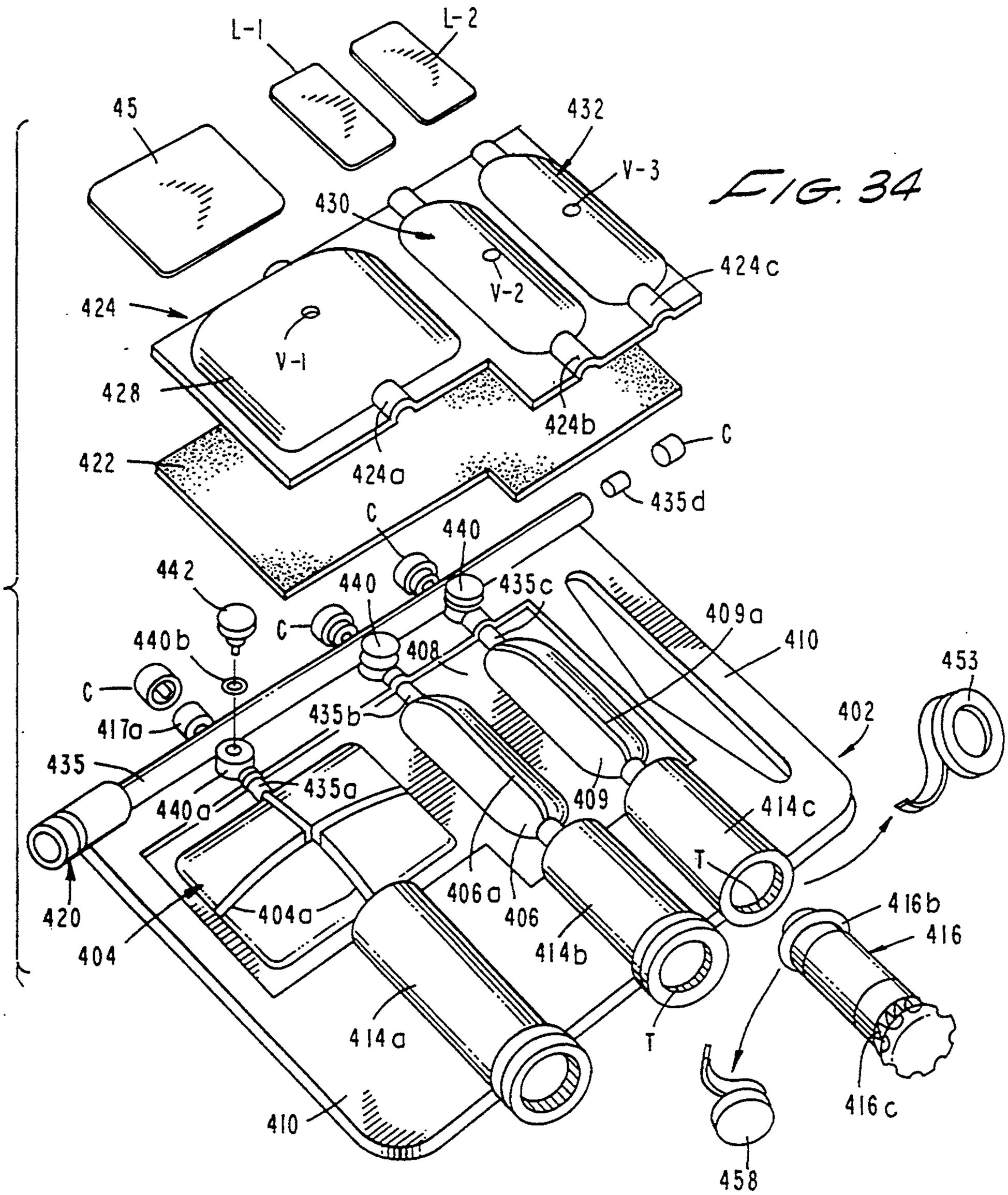
L-1
L-2
45
432
V-3
430
424c
V-2
424
V-1
428
424b
C
422
424a
435d
C
440
442
440
435c
409a
C
440b
408
410
453
C
435b
402
417a
435
435a
440a
409
414c
T
420
404a
406a
406
416b
404
414b
416
414a
T
410
416c
458

FIG. 34

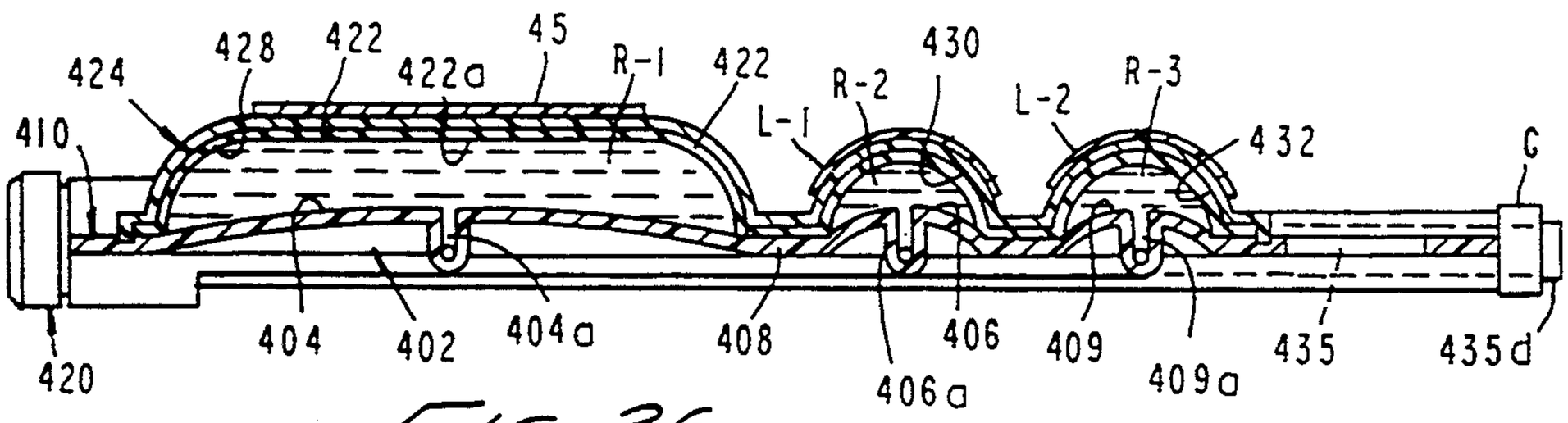
424
428
422
422a
45
R-1
422
R-2
430
L-1
L-2
R-3
432
410
C
420
404
402
404a
408
406
409
409a
435
435d
406a

FIG. 36

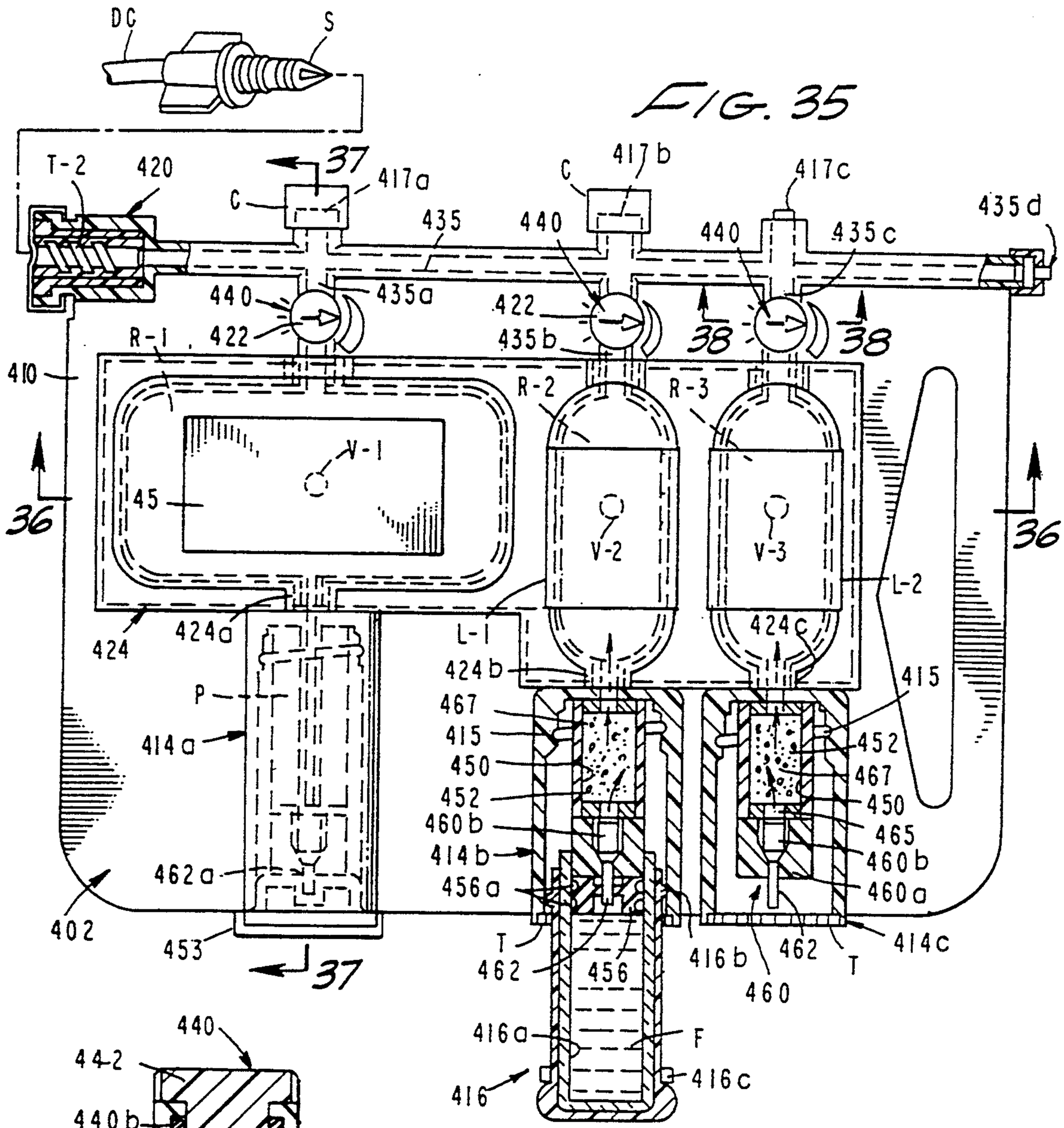

FIG. 35

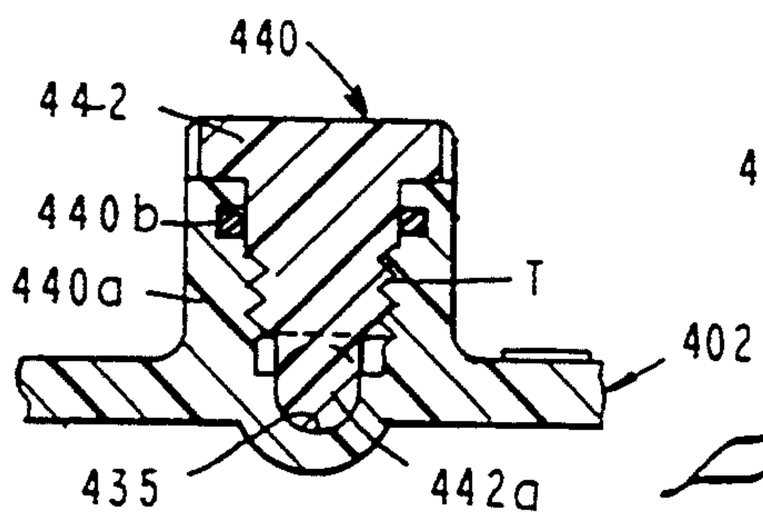

FIG. 38

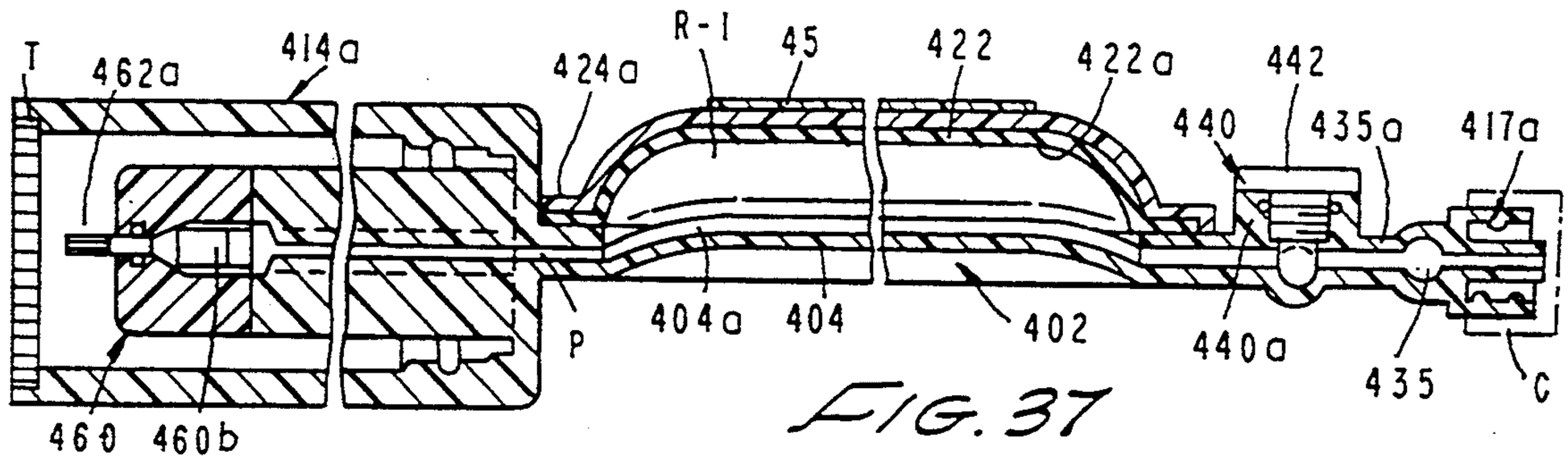

FIG. 37

FLUID DELIVERY APPARATUS HAVING A STORED ENERGY SOURCE

BACKGROUND OF THE INVENTION

This is a continuation in part application of co-pending application Ser. No. 08/046,438, which is a continuation in part of co-pending application Ser. No. 07/987,021 which is a continuation of co-pending application Ser. No. 07/870,269 which has now issued into U.S. Pat. No. 5,205,820 and which is, in turn, a continuation in part of application Ser. No. 07/642,208 which has now issued to U.S. Pat. No. 5,169,389 which is a continuation in part of application Ser. No. 07/367,304 Filed Jun. 16, 1990 which has now issued to U.S. Pat. No. 5,019,047

FIELD OF THE INVENTION

The present invention relates generally to fluid delivery devices. More particularly, the invention concerns an improved apparatus for infusing medicinal agents into an ambulatory patient at specific rates over extended periods of time.

DISCUSSION OF THE INVENTION

Many medicinal agents require an intravenous route for administration thus bypassing the digestive system and precluding degradation by the catalytic enzymes in the digestive tract and the liver. The use of more potent medications at elevated concentrations has also increased the need for accuracy in controlling the delivery of such drugs. The delivery device, while not an active pharmacologic agent, may enhance the activity of the drug by mediating its therapeutic effectiveness. Certain classes of new pharmacologic agents possess a very narrow range of therapeutic effectiveness, for instance, too small a dose results in no effect, while too great a dose results in toxic reaction.

In the past, prolonged infusion of fluids has generally been accomplished using gravity flow methods, which typically involve the use of intravenous administration sets and the familiar bottle suspended above the patient. Such methods are cumbersome, imprecise and require bed confinement of the patient. Periodic monitoring of the apparatus by the nurse or doctor is required to detect malfunctions of the infusion apparatus.

Devices from which liquid is expelled from a relatively thick-walled bladder by internal stresses within the distended bladder are well-known in the prior art. Such bladder, or "balloon" type, devices are described in U.S. Pat. No. 3,469,578, issued to Bierman and in U.S. Pat. No. 4,318,400, issued to Perry. The devices of the aforementioned patents also disclose the use of fluid flow restrictors external of the bladder for regulating the rate of fluid flow from the bladder.

The prior art bladder type infusion devices are not without drawbacks. Generally, because of the very nature of bladder or "balloon" configuration, the devices are unwieldy and are difficult and expensive to manufacture and use. Further, the devices are somewhat unreliable and their fluid discharge rates are frequently imprecise.

The apparatus of the present invention overcomes many of the drawbacks of the prior art by eliminating the bladder and making use of recently developed elastomeric films, expandable foams and similar materials, which, in cooperation with a base defines a fluid chamber that contains the fluid which is to be dispensed. The elastomeric film membrane or the expandable foam member controllably forces fluid within the chamber into fluid flow channels provided in the base.

The elastomeric film materials used as well as various alternate constructions of the apparatus of the invention are described in detail in U.S. Pat. No. 5,205,820 issued to the present inventor. Therefore, U.S. Pat. No. 5,205,820 is hereby incorporated by reference in its entirety as though fully set forth herein. Co-pending U.S. Ser. No. 08/046,438 filed by the present inventor on Apr. 13, 1993 also describes various types of expandable cellular elastomers and elastomeric foams used in making the expandable member of various physical embodiments of the invention. This co-pending application is also hereby incorporated by reference in its entirety as though fully set forth herein.

The apparatus of the invention can be used with minimal professional assistance in an alternate health care environment, such as the home. By way of example, devices of the invention can be comfortably and conveniently removably affixed to the patient's body and can be used for the continuous infusion of antibiotics, hormones, steroids, blood clotting agents, analgesics, and like medicinal agents. Similarly, the devices can be used for I-V chemotherapy and can accurately deliver fluids to the patient in precisely the correct quantities and at extended microfusion rates over time.

One of the embodiments of the invention described in this continuation-in-part application comprises a rather large infusion device for infusing substantial quantities of fluids into the patient. The device in certain instances can be on the order of eight inches long and four inches wide and, therefore, cannot conveniently be attached to the arms or legs of the ambulatory patient. By providing a relatively soft, pliable device that has a unique, carefully engineered, curvilinear shape such as a kidney shape, a lenticular shape, a mesh of curves, a surface of revolution or any other shape that conforms to the anatomical configuration of the human body, proximate the point of infusion, the device can be comfortably and unobtrusively removably affixed to the patient's upper abdomen. In one form of this novel device, the stored energy source used to expel the fluid from the device comprises a unique expandable sponge-like member. In another form of the invention, the device uses a distendable membrane as the stored energy source.

Another novel form of the invention described in this continuation-in-part includes first and second cooperating fluid chambers both driven by unique stored energy sources. This embodiment of the invention permits two or more liquid components to be stored within the device and then controllable intermixed at the time of fluid delivery. Similarly, the multireservoir design permits flushing of one of the reservoirs and the cannula with any selected fluid.

SUMMARY OF THE INVENTION

It is an object of the present invention to provide an apparatus for expelling fluids at a precisely controlled rate which is of a compact, low profile, laminate construction. More particularly, it is an object of the invention to provide such an apparatus which can be used for the precise infusion of pharmaceutical fluids to an ambulatory patient at controlled rates over extended periods of time.

It is another object of the invention to provide an apparatus of the aforementioned character which is

highly reliable and easy-to-use by lay persons in a non-hospital environment.

Another object of the invention is to provide an apparatus which can be factory prefilled with a wide variety of medicinal fluids or one which can readily be filled in the field shortly prior to use.

Another object of the invention is to provide an infusion device which embodies an expandable foam-like, stored-energy source that functions to precisely deliver medicinal fluids to a patient either at a fixed rate or at variable rates and one which is operational in all altitudes and attitudes.

Still another object of the invention is to provide an apparatus of the class described which is soft, conformable and compliant so as to readily conform to the patient's anatomy proximate the point of infusion. More particularly, one form of the invention is specially configured so that it can be unobtrusively removably connected to the patient's upper abdomen. The device of this form of the invention can be relatively large but, because of its unique footprint, can be worn by the ambulatory patient without discomfort.

Yet another object of the invention is to provide an apparatus as described in the preceding paragraph which is provided with a thin, flexible foam backing with adhesive for self-attachment so that the apparatus can be unobtrusively worn under clothing.

A further object of the invention is to provide a low profile, fluid delivery device of laminate construction which can be manufactured inexpensively in large volume by automated machinery.

Another object of the invention is to provide a device of the character described in which fluid is dispelled from the apparatus through either an integral infusion needle, or through a luer type connector, by a thin, distendable membrane cooperatively associated with a thin, plate-like base.

Another object of the invention is to provide an apparatus of the aforementioned character in which the expandable stored energy source is permeable to gases at least in one direction, whereby gases within the medicinal agent can be released from the fluid chamber and not injected into the patient.

A further object of the invention is to provide a fluid delivery device embodying an expandable cellular mass which cooperates with a barrier member and a base to define a fluid chamber having a fluid outlet and in which the expandable cellular mass controllably urges fluid within the fluid chamber outwardly of the fluid outlet of the device.

Another object of the invention is to provide a fluid delivery device of the character described in the preceding paragraph in which the cellular mass comprises a compressible polymeric foam which functions to controllably expel fluid from the device at precise rate over a predetermined time period.

Other objects of the invention are set forth in and will become apparent from a study of U.S. Pat. No. 5,205,820 which is incorporated herein.

BRIEF DESCRIPTION OF THE DRAWINGS

FIG. **1** is a generally perspective view of one form of the fluid dispensing apparatus of the invention.

FIG. **2** is a generally perspective view of the apparatus of FIG. **1** in an assembled configuration.

FIG. **3** is a top view of the apparatus.

FIG. **4** is a front view of the apparatus.

FIG. **5** is an enlarged cross-sectional view taken along lines **5—5** of FIG. **4**.

FIG. **6** is a cross-sectional view similar to FIG. **5**, but showing expansion of the expandable energy source member to expel fluid from the apparatus.

FIG. **7** is a cross-sectional view taken along lines **7—7** of FIG. **4**.

FIG. **8** is a cross sectional view taken along lines **8—8** of FIG. **7**.

FIG. **9** is a generally perspective exploded view of another embodiment of the fluid dispensing apparatus of the present invention.

FIG. **10** is a top view of the apparatus shown in FIG. **9** in an assembled configuration.

FIG. **11** is a cross sectional view taken along lines **11—11** of FIG. **10**.

FIG. **11A** is a generally perspective, exploded view of yet another form of the invention.

FIG. **11B** is a top plan view of the device.

FIG. **11C** is a longitudinal, cross-sectional view of the embodiment of FIG. **11B**.

FIG. **11D** is a cross-sectional view taken along lines **11D—11D** of FIG. **11B**.

FIG. **12** is a generally perspective exploded view of another embodiment of the apparatus of the present invention.

FIG. **13** is a generally perspective view of the assembled apparatus illustrated in FIG. **12**.

FIG. **14** is a top plan view of the apparatus of this form of the invention partly broken away to show internal construction.

FIG. **15** is a cross-sectional view taken along lines **15—15** of FIG. **14**.

FIG. **16** is an enlarged cross-sectional view taken along lines **16—16** of FIG. **14**.

FIG. **17** is a cross-sectional view taken along lines **17—17** of FIG. **15**.

FIG. **18** is a cross-sectional view similar to FIG. **17**, but showing the closure indentation in a flow permitting configuration.

FIG. **19** is an exploded, generally perspective view of yet another embodiment of the invention.

FIG. **20** is a plan view of the apparatus partially broken away to show internal construction.

FIG. **21** is an enlarged cross-sectional view taken along lines **21—21** of FIG. **20**.

FIG. **21A** is an enlarged, fragmentary, cross-sectional view of one of the fluid reservoirs and fluid flow control means of the device.

FIG. **21B** is an enlarged, fragmentary, cross-sectional view of the septal inlet port of the device.

FIG. **22** is an exploded, generally perspective view of still another embodiment of the invention.

FIG. **23** is a plan view of the apparatus partially broken away to show internal construction.

FIG. **24** is a cross-sectional view taken along lines **24—24** of FIG. **23**.

FIG. **25** is a cross-sectional view taken along lines **25—25** of FIG. **23**.

FIG. **26** is a cross-sectional view taken along lines **26—26** of FIG. **23**.

FIG. **27** is a cross-sectional view taken along lines **27—27** of FIG. **23**.

FIG. **28** is a cross-sectional view similar to FIG. **27**, but showing the closure mechanism in a depressed configuration.

FIG. **29** is a cross-sectional view similar to FIG. **28** but showing the closure mechanism in a released state.

FIG. 30 is a generally perspective, exploded view of yet another embodiment of the fluid dispensing apparatus of the present invention.

FIG. 31 is a top view of the apparatus shown in FIG. 30 in an assembled configuration.

FIG. 32 is a cross-sectional view taken along lines 32—32 of FIG. 31.

FIG. 33 is a cross-sectional view taken along lines 33—33 of FIG. 31.

FIG. 33A is a cross-sectional view similar to FIG. 33 but showing the stored energy means in a compressed state.

FIG. 34 is a generally perspective exploded view of another embodiment of the apparatus of the present invention.

FIG. 35 is a plan view of the appratus partly broken away to show internal construction.

FIG. 36 is a cross-sectional view taken along lines 36—36 of FIG. 35.

FIG. 37 is a cross-sectional view taken along lines 37—37 of FIG. 35.

FIG. 38 is a cross-sectional view taken along lines 38—38 of FIG. 35.

DESCRIPTION OF THE INVENTION

Referring to FIGS. 1 through 8, another embodiment of the invention is there shown. The apparatus of this form of the invention is similar in certain respects to the embodiments described in U.S. Pat. No. 5,205,820. However, the apparatus of this later form of the invention is of a very simple construction, exhibits a unique configuration and includes a novel expandable sponge-like cellular member which functions as the stored energy source for controllably expelling beneficial agents from the device.

Turning particularly to FIG. 1, the apparatus can be seen to comprise a base 12 having a novel curvilinear or kidney like geometry and an operating assembly 14 associated therewith. Operating assembly 14 comprises a thin planar barrier member 16 and a stored energy source, shown here as an expandable sponge like member 18. A cover 20 having an internal chamber 20*a* and a base flange 20*b* cooperates with base 12 to enclose the operating assembly in the manner shown in FIG. 5.

A combination filling means and fluid outlet means is provided on base 12 and is used to fill the fluid reservoirs "R" via flow passageways 21 and ports 21*a* and 21*b* provided in base 12 (FIGS. 5 and 7) with either a beneficial agent or parenteral fluid. After the reservoirs are filled, the inlet port 22 of the filling means is closed by a check valve 24 of the character illustrated in FIG. 7. Valve 24 acts against a valve seat 26 formed in an outlet fitting, such as a luer fitting 28 which is affixed to base 12. A removable cap 30 normally seals fitting 28. As shown in FIG. 8, fitting 28 is provided with a plurality of circumferentially-spaced, axially-extending flow passageways 29 within which valve member 24 is centered. Passageways 29 communicate with flow passageway 21 to permit the flow of fluid into and out of reservoirs R.

Base member 12 includes integrally formed barrier member engagement means, or ullage means shown here as a pair of upstanding curved protuberances 34. Each of the curved protuberances 34 is provided with a longitudinally extending first fluid passageway or conduit 36. When the apparatus is assembled in the manner shown in FIG. 7, passageways 36 are superimposed over and communicate with passageway 21. As indicated in FIGS. 5 and 7, protuberances 34 extend upwardly into fluid chambers R so as to define an ullage within the chambers. Protuberances 34 can be integrally formed with base 12 or can be attached thereto for certain applications.

Affixed to the bottom of base 12 is a cushioning means shown here as a thin, planar shaped foam pad 40. Foam pad 40 is provided with adhesive on both its upper and lower surfaces. the adhesive on the upper surface of pad 40 enables the pad to be affixed to the lower surface of base 12. As indicated in FIGS. 1 and 2, a peel strip 42 is connected to the bottom surface of foam pad 40 by the adhesive provided thereon. When the device is to be used, peel strip 42 can be stripped away from pad 40 so that the adhesive on the lower surface of the foam pad 38 can be used to releasably affix the apparatus of the invention to the patient's skin proximately the upper abdomen. The unique shape of the device coupled with its flexibility permits it to comfortably conform to the patient's body.

The various materials that can be used to construct the various components of the device, including the base member, the barrier member, the stored energy source and the cover are discussed in detail in Ser. No. 08/046,438 which is incorporated herein by reference

With the check valve having been opened by a suitable dispensing connector of a character well known in the art, fluid is first introduced into the fluid chambers R via the luer fitting and passageways 21 and 36. During the fluid dispensing step, as expandable sponge-like member 18 attempts to return to its original less compressed configuration (FIG. 6), it will force barrier member 16 to move toward engagement with the upper surface of protuberances 34 and in so doing will cause barrier member or membrane 16 to efficiently expel the fluid contained within the reservoirs from the device via passageways 36 and 21.

The configuration of protuberances 34 ensure that substantially all of the fluid within chambers R will be expelled therefrom as the expandable member returns toward its starting, uncompressed configuration. Expandable member 18 can be constructed of various materials and be configured to provide various degrees of expansion rate so as to control the rate of its return to its less compressed state thereby controlling the rate of fluid expulsion.

Cover 20 is preferably constructed from a yieldably deformable moldable plastic and can include venting means, or apertures V, for venting gases, if any, contained within the medicinal agent. Affixed to the top of cover 20 is a medicant and use instruction label 45 which overlays apertures V and can be used to identify the medicinal fluid contained within chambers R of the device.

Turning now to FIGS. 9 through 11, yet another form of the apparatus of the invention is there shown. The device of this form of the invention is similar in most respects to the embodiment shown in FIGS. 1 through 8, save that the stored energy source is not a cellular, elastomeric mass, but rather comprises a distendable membrane 50. Membrane 50 functions as the stored energy source in much the same way as do the distendable membrane constructions disclosed in U.S. Pat. No. 5,205,820 which is incorporated herein by reference.

In this latest form of the invention, the operating assembly comprises the distendable membrane 50 which overlays base 12. Base 12 is of the character previously

described and like membrane **50** is generally kidney shaped. Disposed between membrane **50** and cover **20** is a semi-rigid, porous structure **52** which, as best seen in FIG. **11**, includes concave portions **54** having interior surfaces against which membrane **50** expands as it distends into its extended configuration. As before, as membrane **50** is distended from the first position shown in FIG. **11** to a position wherein it is in engagement with the interior walls of concave portions **54**, internal stresses are built up which tend to return it toward its original non-distended configuration.

Suitable materials for the construction of membrane **50** and the manner in which the membrane functions are discussed in greater detail in co-pending application Ser. No. 08/046,438.

Cover **20** cooperates with base **12** to enclose the operating assembly in the manner shown in FIG. **11** and is provided with combination filling means and fluid outlet means for filling the fluid reservoirs R via flow passageways **21** provided in base **12** (FIGS. **5** and **7**). After the reservoirs are filled, the inlet port **22** of the filling means is closed by a check valve **24** of the character illustrated in FIG. **7**. As before, valve **24** acts against a valve seat **26** formed in an outlet fitting, such as a luer fitting **28**. A removable cap **30** normally seals fitting **28**.

Materials suitable for the construction of distendable membrane **50** and porous structure **52** are identified in U.S. Pat. No. 5,205,820 which is incorporated herein by reference.

In operation of the device, fluid is introduced into the fluid chambers R via the luer fitting and passageways **21** and **36** causing membrane **50** to distend into concave portions **54**. During the fluid dispensing step and with the check valve suitably opened by an interacting dispensing connector of a character well known in the art, as distendable membrane **50** attempts to return to its original non-distended configuration (FIG. **11**), it will move toward engagement with the upper surface of protuberances **34** and in so doing will controllably expel the fluid contained within the reservoirs from the device via passageways **36** and **21**.

As best seen in FIG. **2**, external flow rate control means R-C are provided in infusion line L and function to precisely control the rate of fluid flow toward the patient. As also indicated in FIG. **2**, porous structure **52**, like sponge member **18**, is of a character that, in cooperation with cover **20**, will function as venting means including apertures V for venting gases, if any, which are contained within the medicinal agent. Affixed to the top of cover **20** is a medicant and use instruction label **45** which may be breathable and covers apertures V and can be used to identify the medicinal fluid contained within chambers R of the device.

As was the case with the previously described embodiment, the unique shape of the device coupled with its flexibility permits it to comfortably conform to the patient's body. When worn under clothing, the device will not create an unsightly bulge thereby making it ideally suited for use by ambulatory patients.

Referring to FIGS. **11A** through **11D**, still another embodiment of the invention is there shown. The apparatus of this form of the invention is similar in many respects to the embodiment shown in FIGS. **1** through **8** and like numbers are used to identify like components. This latest form of the invention also uses an expandable sponge-like assembly **55** as the stored energy source. However, here the position of the stored energy source and the barrier membrane are reversed so that the fluid within the internal reservoir is visible through the transparent cover member **56**. Assembly **55** is here made up of two separate cellular sponge-like members **55*a*** and **55*b***.

Turning particularly to FIG. **11A**, the apparatus of this form of the invention can be seen to comprise a base **57** having a novel curvilinear or kidney like geometry and an operating assembly associated therewith. The operating assembly here comprises a thin planar barrier member **16** which cooperates with the previously identified stored energy source, or expandable sponge-like assembly **55**. Cover **56** is provided with an internal chamber **56*a*** and a base flange **56*b*** which cooperates with base **57** to enclose the operating assembly in the manner shown in FIGS. **11C** and **11D**.

As before, combination filling means and fluid outlet means is provided on base **57** and is used to fill the fluid reservoirs "R" via flow passageways **58** provided in base **57** (FIG. **11C**) with either a beneficial agent or parenteral fluid. After the reservoirs are filled, the inlet port "IP" of the filling means is closed by a check valve **24** of the character previously described. Valve **24** acts against a valve seat **26** formed in an outlet filling, such as a luer filling **28** which is affixed to base **57**. A removable cap **30** normally seals fitting **28**. As before, fitting **28** is provided with a plurality of circumferentially-spaced, axially-extending flow passageways **29** within which valve member **24** is centered (see FIG. **8**).

In this latest embodiment, cover member **56** rather than the base member, includes integrally formed barrier member engagement means, shown here as a pair of side by side chambers **59*a*** and **59*b***. Each of the chambers is provided with a longitudinally extending first fluid passageway or conduit "C". When the apparatus is assembled in the manner shown in FIG. **11C**, conduits "C" are superimposed over and communicate with reservoirs "R".

Affixed to the bottom of the base **57** is a cushioning means shown here as a thin, planar shaped foam pad **40**. A peel strip **42** is connected to the bottom surface of foam pad **40** by the adhesive provided thereon. When the device is to be used, peel strip **42** can be stripped away from pad **40** so that the adhesive on the lower surface of the foam pad can be used to releasably affix the apparatus of the invention to the patient's skin proximately the lower abdomen. Once again, the unique shape of the device coupled with its flexibility permits it to comfortably conform to the patient's body.

With the check valve having been opened by a suitable dispensing connector of a character well known in the art, fluid is first introduced into the fluid chambers "R" via the luer fitting and passageways **58**. During the filling step, expandable sponge-like members **55*a*** and **55*b*** are forced by barrier member **16** to move from the extended position shown in FIGS. **11C** and **11D** into a more compressed configuration. During the dispensing step, members **55*a*** and **55*b*** force barrier member **16** to move from the position shown by the phantom lines in FIGS. **11C** and **11D** outwardly and in so doing cause barrier member or membrane **16** to efficiently expel the fluid contained within the reservoirs from the device via conduits C and passageways **58**.

The configuration of chambers **56*a*** and **56*b*** ensure that substantially all of the fluid within chambers "R" will be expelled therefrom as the expandable members return toward their starting, less compressed configuration shown in the drawings. As previously mentioned, cover member **56** is constructed of materials which are

substantially transparent so that the fluid contained within filled reservoirs "R" is visible to the user of the device at the time of infusion or fluid expulsion.

Referring to FIGS. **12** through **18**, another embodiment of the invention is there shown. The apparatus of this form of the invention is similar in certain respects to the last described embodiment. However, the apparatus of this later form of the invention uniquely includes first and second spaced apart reservoirs with first and second liquid components being contained within the reservoirs.

Turning particularly to FIGS. **12** and **13**, the apparatus of this latest form of the invention, which is generally designated by the numeral **60**, can be seen to comprise a base **62** having a first portion **64**, a second portion **66**, a third portion **68**, which is disposed intermediate portions **64** and **66**, and a fourth marginal portion **70** which circumscribes the first, second and third portions. Base **62** is preferably constructed of a thin moldable thermo plastic material which can be thermo formed into the cross-sectional configuration shown in FIG. **15**. More particularly, first portion **64** of the base is molded so as to have an upstanding central portion **64*a*** which is provided proximate its center with a depression **64*b***. Depression **64*b*** is defined by intersecting angularly extending walls **64*c*** and **64*d***. Provided in wall **64*c*** is a fluid inlet **74**. As best seen in FIG. **15**, intermediate portion **68** as well as marginal portion **70** is generally flat.

Overlying base **62** is a distendable member shown here as an elastomeric, generally planar distendable membrane **77**. Superimposed over base **62** and membrane **77** in a membrane clamping relationship is a formed cover means, or cover assembly **79** which is also preferably constructed of a heat formable thermo plastic material. It is to be understood that both base **62** and cover assembly **79** can be constructed from a wide variety of materials and can be sealably interconnected with membrane **77** in a number of ways well known in the art including mechanical, adhesive and thermo bonding. Affixed to the cover member is a use and instruction label **45** of the character previously described (FIG. **14**). When cover means **79** is interconnected with base **62** in the manner shown in FIG. **13**, the cover means sealably encapsulates membrane **77**. More particularly, as best seen in FIG. **15**, the central portion **79*a*** of cover **79** clamps and seals membrane **77** securely against the third intermediate portion **68** of base **62**. In similar fashion, the marginal portion **79*b*** of cover **79** sealably clamps the marginal portions of membrane **77** against the fourth marginal portion of base **62** which circumscribes portions **64** and **66**.

Referring both to FIGS. **12** and **15**, it can be seen that the cover member **77** is provided with a first reservoir defining chamber **82** which is superimposed over portion **64** of base **62** and a second reservoir defining chamber **84** which is disposed over second portion **66** of base **62**. In the manner presently to be described, the inner walls of these chamber-defining portions provide engagement surfaces for engagement by distendable membrane **77** when the membrane is distended from a first position in which it is proximate base **62** to a second distended position in which the membrane moves proximate the interior walls of chamber defining portions **82** and **84** of cover **79**. As illustrated in FIGS. **12** and **15**, cover **79** is provided with a fluid inlet port **86** which communicates with the interior of a reservoir R-**1**. Reservoir R-**1** is formed between portions **66** of base **62** and the interior surface **77*a*** of membrane **77**. In similar fashion, when the membrane is in a further distended configuration, the membrane cooperates with first portion **64** of base **62** to define a second reservoir R-**2**. With this construction, reservoir R-**2** can be filled via septal port **74*a***. As fluid flows into the reservoir, distendable membrane **77** will be distended from the first position wherein it is in engagement with the base to the second position shown in FIG. **15** wherein it cooperates with the base to define reservoir R-**2**. In similar fashion, fluid can be introduced through septal port **86** to move the distendable membrane from a first position in engagement with portion **66** of base **62** into the second position shown in FIG. **15** wherein it cooperates with the base to define reservoir R-**1**.

Reservoirs R-**1** and R-**2** can communicate with each other via a fluid passageway **90** that is provided in cover **79**. As indicated in FIG. **16**, passageway **90** is normally closed by a downwardly deformed generally frustoconically shaped wall section **79*c*** provided in cover member **79**. This deformed wall section is closely received within a generally hemispherically shaped depression **62*a*** formed in base **62**. When wall section **79*c*** is in its deformed configuration, a small section **77*b*** of membrane **77** is sealably clamped against the interior wall of depression **62*a*** in a manner to prevent fluid flow through passageway **90**.

Turning now to FIG. **18**, it is to be noted that an upward manual pressure exerted on the exterior wall of depression **62*a*** in the direction of the solid line arrow in FIG. **18**, will cause deformed wall section **79*c*** of the cover means to move upwardly from the first position shown in FIG. **17** to the second position shown in FIG. **18** thereby opening passageway **90** to fluid flow. When passageway **90** is in the open or fluid flow configuration, fluid can flow freely from reservoir R-**1** to reservoir R-**2**.

By way of example, in using the device of this latest form of the invention, reservoir R-**2** is filled with a first fluid component by means of a fluid conduit **93** which is interconnected with fluid inlet **74** (FIG. **15**). As fluid flows into inlet **74**, distendable membrane **77** will be distended into the configuration shown in FIG. **15** thereby filling reservoir R-**2** with the first liquid component. Reservoir R-**1** can be filled with a second fluid component by introducing the second fluid component into fluid inlet **86** provided in cover **79**. As the second component flows into inlet **86**, it will distend the distendable membrane **77** into the distended configuration shown in FIG. **15** thereby filling reservoir R-**1** with the second component. Membrane **77** can be specifically tailored so as to provide differential stresses and differential areas of stored energy densities as between reservoirs R-**1** and R-**2** and thereby enabling fluid flow between the reservoirs. Initially fluid cannot flow between reservoirs R-**1** and R-**2** because of the closure means which is here provided in the form of the deformable wall section **79*c*** of cover **79**.

When it is desired to intermix the fluids within R-**1** and R-**2**, an upward pressure is exerted against the external surface of depression **62*a*** formed in the base. This causes wall section **79*c*** to move upwardly in the manner shown in FIG. **18** so as to open passageway **90** to fluid flow in the manner shown in FIG. **18**. With the passageway open, fluid under pressure within chamber R-**1** can rapidly flow into partially filled reservoir R-**2** via rate control means RC-**1** and intermix with or provide a washing action to the fluid component contained within

reservoir R-2. After the fluid components, which may be beneficial agents of the character defined in U.S. Ser. No. 08/046,438, have been intermixed, conduit **93**, which has been closed by a standard closure clamp or other valve means **95** of a character well known to those skilled in the art, is opened permitting the intermixed fluid now contained within reservoir R-2 to flow outwardly of the device via rate control RC-2 through conduit **93**. Rate control means RC-1 and RC-2 can comprise hydrophillic porous masses of a character well known in the art.

In addition to using the device of this latter form of the invention for fluid mixing and simultaneous delivery of first and second components, the device can also be used for sequentially delivering the first and second components.

Turning now to FIGS. **19** through **21**, yet another embodiment of the invention is there shown and generally designated by the numeral **100**. The apparatus of this form of the invention is very similar in construction to the last described embodiment and like components are identified with like numbers. However, the apparatus of this later form of the invention embodies a slightly different closure means for controlling fluid flow through the fluid passageway that connects the two reservoirs of the apparatus. Superimposed over portion **110** of base **102** is a first elastomeric membrane **117**. Superimposed over portion **106** of base **102** is a second elastomeric generally planar distendable membrane **119** which is somewhat smaller that membrane **117**. Membranes **117** and **119**, which may have different operating characteristics, are provided with indexable apertures **117***a* and **119***a* respectively. Disposed intermediate and sealably affixed to membranes **117** and **119** and covering the apertures therein, is a frangible membrane **121**, the purpose of which will presently be described.

Superimposed over base **102** and membranes **117**, **119** and **121** is a formed cover means, or cover assembly **124** which is also a preferably constructed of a heat formable thermo plastic material. When cover means **124** is interconnected with base **102** in the manner shown in FIG. **21**, the cover means sealably encapsulates the membranes. More particularly, as best seen in FIGS. **19** and **21**, the central portion **124***a* of cover **124** clamps membranes **117** and **119** securely against the third intermediate portion **108** of base **102**. In similar fashion, the marginal portion **124***b* of cover **124** sealably clamps the marginal portions of the membranes against the fourth marginal portion of base **102** which circumscribes portions **104** and **106**. Once again, the cover means and base can be sealably interconnected with the membranes by various mechanical, bonding and thermo welding techniques. Cover assembly **124** is also provided with suitable vent means for venting reservoirs R-1 and R-2. As before, the vent means are covered by a breathable, hydrophobic medicament and use label **45** and a cover patch **45***a* (see FIG. **21**A).

Referring both to FIGS. **19** and **21**, it can be seen that the cover member **124** is provided with a first reservoir defining chamber **130** which is superimposed over upraised portion **104** of base **102**. A second reservoir defining chamber **132** is formed in base **102** below second portion **106**. In the manner presently to be described, the inner walls of these two chamber-defining portions provide engagement surfaces for engagement by distendable membranes **117** and **119** when the membranes are distended from a first planar position to a second more distended position in which the membranes move into proximity with the interior walls of chamber defining portions **130** and **132**.

As illustrated in FIG. **20**, cover **124** is provided with a fluid inlet port **136** which comprises a septal port of standard design which is selably connected to cover **1 24** and base **102** and communicates with the interior of a reservoir R-1. Reservoir R-1 is formed between a top wall portion **137** of cover **127** (FIG. **19**) and the interior surface **119***a* of membrane **119**. In similar fashion, when membrane **117** is in its more distended configuration, the membrane cooperates with first portion **104** of base **102** to define a second reservoir R-2. With this construction, reservoir R-2 can be filled through an inlet port **140** which is sealably connected to base **102** and which, as shown in FIG. **21**B, comprises a septal port **140***a* pierceable by either a needle or a blunt cannula. As fluid flows into this inlet port, distendable membrane **117** will be further distended from the first position wherein it is in engagement with the base to the second position shown in FIG. **21** wherein it cooperates with the base to define reservoir R-2. In similar fashion, fluid can be introduced through inlet port **136** to move distendable membrane **119** from a first generally planar position into the second position shown in FIG. **22** wherein it cooperates with the cover to define reservoir R-1.

Reservoirs R-1 and R-2 can communicate with each other via a fluid passageway **147** (FIG. **21**) that is provided between base **102** and cover **124**. However, passageway **147** is normally closed by frangible membrane **121** which covers apertures **117***a* and **119***a* and blocks fluid flow therethrough. Turning to FIGS. **19** and **20**, it is to be noted that cover **124** is provided with an upstanding push button like protuberance **149** which is disposed directly over frangible membrane **121**. When a downward pressure is exerted on protuberance **149**, frangible membrane **121** will be ruptured by member **149***a* (see FIG. **21**A) thereby permitting fluid to flow freely through passageway **147** from reservoir R-1 to reservoir R-2.

In using the device of this latest form of the invention, reservoir R-2 can be partially filled with a first fluid component via inlet **140** (FIG. **20**). As fluid flows into inlet **140**, distendable membrane **117**, which can have a first operating characteristic, will be distended part way into chamber **130** thereby partially filling reservoir R-2 with the first component. Reservoir R-1 can be filled with a second fluid component by introducing the second fluid component into fluid inlet **136** provided in cover **124**. As the second component flows into inlet **136**, it will distend the distendable membrane **119** which can have a second operating characteristic, downwardly into the distended configuration shown in FIG. **21** thereby filling reservoir R-1 with the second component. Initially fluid cannot flow between reservoirs R-1 and R-2 because of the closure means which is here provided in the form of frangible membrane **121**.

When it is desired to intermix the fluids within R-1 and R-2, a downward pressure is exerted against protuberance **149**. This causes member **149***a* to rupture frangible membrane **121** thereby permitting fluid to flow through apertures **117***a* and **119***a*. With the indexed apertures opened to fluid flow, fluid under pressure within chamber R-1 can rapidly flow into reservoir R-2 and intermix with the fluid component contained within reservoir R-2. The operating characteristics of membrane are designed so that the fluid flowing from reservoir R-1 toward reservoir R-2 will be of sufficient pres-

sure to further distend membrane **117** into chamber **130** as the fluids are intermixed. A third fluid component can now be introduced into reservoir R-2 via either septal port **136** or **140** and intermixed with the first and second previously mixed components. This step further distends membrane **117** to the position shown in FIG. **21**.

After the fluid components, which may be medicaments, parenteral liquids, enteral liquids, or beneficial agents of the character as defined in U.S. Ser. No. 08/046,438, have been intermixed, outlet **114**, which has been closed by a cap **151** (FIG. **19**) and by a standard check valve **114***a* of a character well known to those skilled in the art, can be opened. With outlet **114** open to fluid flow, the intermixed fluid now contained within reservoir R-2 can freely flow outwardly of the device as a result of the action of the second stored energy source or distended membrane **117**.

Turning now to FIGS. **22** through **29**, yet another embodiment of the invention is there shown. The apparatus of this form of the invention is similar in some respects to the last described embodiment. However, the apparatus of this later form of the invention uniquely includes first, second and third spaced-apart reservoirs that may contain first and third liquid components that may be intermixed for simultaneous delivery or they may be sequentially delivered for certain types of treatment.

Turning particularly to FIGS. **22**, **23** and **24**, the apparatus of this latest form of the invention, which is generally designated by the numeral **160**, can be seen to comprise a base **162** having a first portion **164**, a second portion **166**, a third portion **168**, which is disposed intermediate portions **164** and **166**, a fourth portion **169** and a fifth marginal portion **170** which circumscribes the first, second, third and fourth portions. As before, base **162** is preferably constructed of a thin moldable thermo plastic material which can be thermo formed into the cross-sectional configuration shown in FIG. **24**. More particularly, first, second and fourth portions **164**, **166** and **169** of the base are molded so as to have upstanding central portions which are provided with fluid passageways **164***a*, **166***a* and **169***a* respectively. Provided in side wall **162***a* of base **162** are fluid inlets comprising channels **174***a*, **174***b* and **174***c* which are adapted to sealably receive fill port means for filling the reservoirs of the device in a manner presently to be described. The fill port means are here shown as septum assemblies **177***a*, **177***b* and **177***c* of standard construction (see also FIG. **25**). As best seen in FIG. **24**, the portion intermediate of portions **164** and **166** and the portion intermediate of portions **166** and **169**, as well as marginal portion **170**, are generally flat. Base **162** is provided with a dispensing means or outlet port assembly **180**, the configuration of which is best seen in FIGS. **22**, **23**, and **26**. The details of this outlet port assembly will be described presently.

Overlying base **162** is a deformable member shown here as an elastomeric, generally planar distendable membrane **184**. Superimposed over base **162** and membrane **184** in a membrane clamping relationship is a formed cover means, or cover assembly **186** which is also preferably constructed of a heat formable thermo plastic material. It is to be understood that both base **162** and cover assembly **186** can be constructed from a wide variety of materials and can be sealably interconnected with membrane **184** in a number of ways well known in the art including mechanical, adhesive and thermo bonding. Affixed to the cover member is a use and instruction label **45** of the character previously described. When cover means **186** is interconnected with base **162** in the manner shown in FIG. **24**, the cover means sealably encapsulates membrane **184**. More particularly, as best seen in FIG. **24**, the central portions of the cover clamp membrane **184** securely against the flat base portions disposed between upstanding portions **164**, **166** and **169**.

Referring both to FIGS. **22** and **24**, it can be seen that the cover member **186** is provided with a first reservoir defining chamber **190** which is superimposed over portion **164** of base **162**, a second reservoir defining chamber **192** which is disposed over second portion **166** of base **162**, and a third reservoir defining chamber **194** which is disposed over third portion **169**. In the manner presently to be described, the inner walls of these chamber-defining portions provide engagement surfaces for engagement by distendable membrane **184** when the membrane is distended from a first position in which it is proximate base **162** to a second distended position in which the membrane moves into proximity with the interior walls of chamber-defining portions **190**, **192**, and **194** of cover **186**. As best seen in FIGS. **22**, **23**, **24** and **26**, outlet port assembly **180** communicates with the interior of reservoirs R-1, R-2 and R-3 via passageway **195** (FIG. **23**). Reservoirs R-1, R-2 and R-3 are formed between portions **164**, **166** and **169** of base **162** and the interior surface **184***a* of membrane **184** in the manner shown in FIG. **24**. With this construction, reservoir R-1 can be filled through inlet port or septum **177***a*, reservoir R-2 can be filled through inlet port or septum **177***b* and reservoir R-3 can be filled through septum **177***c*. As fluid is introduced into each of the reservoirs, distendable membrane **184** will be distended from the first position wherein it is proximate the base to the second position shown in FIG. **24** wherein it cooperates with the base to define the three reservoirs. It is to be understood that the reservoirs can be filled at any desired time with any desired liquid including parenteral fluids, pharmaceuticals or other types of medicaments or chemical agents.

Reservoirs R-1, R-2, and R-3 communicate with passageway **195** via stub passageways **195***a*, **195***b*, and **195***c* respectively. Each of the stub passageways is provided with check valves **197** which control fluid flow therethrough. Passageways **195***a*, **195***b*, and **195***c* include closure means, shown here as push button type closure mechanisms **100**. As best seen in FIGS. **22** and **27**, each of the closure mechanisms comprises a frangible disk **102** which is superimposed over membrane **184** and a molded boss **104** (FIG. **22**) which is strategically located on base **162**. As indicated in FIG. **27**, disk **102** in cooperation with membrane **184** normally blocks fluid flow through the stub passageway with which it is associated (here shown as **195***a*). Covering disk **102**, membrane **184** and boss **104** is an accordion-like, yieldably deformable cover section **106** which can be depressed downwardly by the user's finger in the manner shown in FIG. **28**. When section **106** is deformed, frangible cover membrane **107** is ruptured and disk **102** is clamped against membrane **184** and boss **104** causing the disk to be crushed in the manner shown in FIG. **28**. When pressure on Section **106** is released as shown in FIG. **29**, fluid can freely flow past boss **104** and inflated membrane **184** through the stub passageway and into passageway **195**. Each of the closure mechanisms is of identical construction and operation to that just described so that each of the stub passageways **195***a*, **195***b*

and **195***c* can be selectively opened to permit fluid flow into passageway **195**. Each of the reservoirs can be vented by vent means comprising vent apertures V-**1**, V-**2**, and V-**3** (FIG. **22**) provided in cover **186**. Aperture V-**1** is covered by breathably label **45** while apertures V-**2** and V-**3** are covered by vent patches L-**1** and L-**2** respectively.

By way of example, in using the device of this latest form of the invention, reservoir R-**1** can be filled with a first fluid component by means of septal port **177***a*. As fluid flows into the reservoir, distendable membrane **184** will be distended into the reservoir. Reservoir R-**2** can next be filled with a second fluid component via septal port **177***b*. As the second component flows into R-**2**, membrane **184** will distend into the distended configuration shown in FIG. **24** thereby filling reservoir R-**2** with the second component. Next, reservoir R-**3** can be filled with a third.

After the three fluid components, which may be parenteral fluids, beneficial agents or chemical elements of the character defined in U.S. Ser. No. 08/046,438, have been introducted into reservoirs R-**1**, R-**2** and R-**3**, outlet port assembly **180** can be operated to dispense fluid from the device. As seen in FIG. **26**, assembly **180** which includes a check valve **180***a* that blocks fluid flow outwardly from the device via the dispensing port **180***b*. Assembly **180** is operated by first removing closure cab **180***c* and opening check valve **180***a* using a dispensing connector of a type well known to those skilled in the art. With check valve **180***a* open, fluid will flow outwardly of the device via port **180***b* and a cannula connected to the patient due to the urging of distended membrane **184** as it returns to its less distended starting configuration.

In addition to using the device of this latter form of the invention for sequential delivery of the first, second and third components, the device can also be used for simultaneously delivering the first, second and third components when mechanisms **100** are operated simultaneously.

Referring to FIGS. **30** through **33**, still another embodiment of the invention is there shown. The apparatus of this form of the invention is similar in many respects to the embodiment just described and like numbers are used to identify like components. However, unlike the embodiment of FIGS. **22** through **29**, the apparatus of this later form of the invention does not use a distendable membrane as an energy source to expel fluid from the three reservoirs. Rather, the device of this embodiment includes a novel expandable sponge-like assembly **300** which functions as the stored energy source. Assembly **300** is made up of three sponge-like, cellular members **300***a* and **300***b* and **300***c*.

Turning particularly to FIGS. **30**, **31** and **32**, the apparatus of this latest form of the invention, comprises a base **302** having a first sump-like recessed portion **304**, a second sump-like recessed portion **306**, a third portion **308**, which is disposed intermediate portions **304** and **306**, a fourth sump-like recessed portion **310** and a fifth marginal portion **312** which circumscribes the first, second, third and fourth portions. As before, base **302** is preferably constructed of a thin moldable thermo plastic material which can be thermo formed into the cross-sectional configuration shown in FIG. **32**. First, second and fourth portions **304**, **306** and **310** receive sponge members **300***a*, **300***b* and **300***c* respectively and are provided with vent means or vent apertures "V" which are initially covered with breathable sealing patches "P".

As best seen in FIG. **31**, provided in side wall **317***a* of cover assembly **317** are fluid inlets comprising channels **320***a*, **320***b* and **320***c* which are adapted to sealably receive fill port means for filling the reservoirs of the device in a manner presently to be described. The fill port means are here shown as septum assemblies **322***a*, **322***b* and **322***c* of standard construction (see also FIG. **31**). In a manner presently to be described, the fluid inlets communicate with reservoirs R-**1**, R-**2** and R-**3**.

Overlying sponge members **300***a*, **300***b* and **300***c* is a deformable barrier member shown here as barrier membrane **327**. Superimposed over barrier membrane **327** and base **302** in a membrane clamping relationship is the previously identified cover means, or cover assembly **3 17** which is preferably constructed of a heat formable thermo plastic material. When cover means **317** is interconnected with base **302** in the manner shown in FIG. **32**, the cover means sealably encapsulates barrier membrane **327** as well as the stored energy source, or members **300***a*, **300***b*, and **300***c*. More particularly, as indicated in FIG. **32**, the central portions of the cover clamp membrane **327** securely against the flat base portions disposed between the sponge receiving recesses.

Referring both to FIGS. **30** and **32**, it can be seen that the cover member **3 17** is provided with a first reservoir defining chamber **3 19** which is superimposed over portion **304** of base **302**, a second reservoir defining chamber **321** which is disposed over second portion **306** of base **302**, and a third reservoir defining chamber **323** which is disposed over fourth portion **310**. In the manner presently to be described, the inner walls of these chamber-defining portions provide engagement surfaces for engagement by barrier membrane **327** when the membrane is expanded from a first generally planar position shown by the phantom lines in FIG. **32** to a second expanded position in which the membrane resides proximate the interior walls of chamber-defining portions **319**, **321**, and **323** of cover **317**. As best seen in FIGS. **30** and **31**, an outlet port assembly **180**, of the character previously described, communicates with the interior of reservoirs R-**1**, R-**2** and R-**3** via passageway **195** and aperture **327***a* provided in membrane **327**. With this construction, reservoir R-**1** can be filled through inlet port or septum **322***a* via passageway **319***a*. Reservoir R-**2** can be filled through inlet port or septum **322***b* via passageway **321***a* and reservoir R-**3** can be filled through septum **322***c* and passageway **323***a* (see FIG. **33A**). As fluid "F" is introduced into each of the reservoirs, barrier membrane **327** will compress the sponge members **300***a*, **300***b* and **300***c* from a first extended position shown in FIG. **32** to a second more compressed position shown in FIG. **33A**. It is to be understood that the reservoirs can be filled at any desired time with any desired liquid including parenteral fluids, pharmaceuticals or other types of medicaments or chemical agents.

As before, reservoirs R-**1**, R-**2**, and R-**3** communicate with passageway **195** via stub passageways **195***a*, **195***b*, and **195***c* respectively. Each of the stub passageways are provided with rate control means **197** which control the rate fluid flow therethrough. Passageways **195***a*, **195***b*, and **195***c* are provided with closure means, shown here as push button type closure mechanisms **100** of the character previously described. Each of the closure mechanisms comprises a frangible disk **102** and each is operated in the same manner as described in connection with the embodiment of the invention shown in FIGS. **22** through **29**.

As was the case with the earlier described embodiment, the device of this latter form of the invention can be used for sequential or simultaneous delivery of first, second and third components.

Turning to FIGS. **34** through **38**, yet another embodiment of the invention is there shown. The apparatus of this form of the invention is a three-reservoir construction similar in some respects to the embodiment described in FIGS. **22** through **29**. However, the apparatus of this later form of the invention uniquely includes means for interconnecting medicament vials with the three reservoirs and for adding to the fluid contained within the vials selected additives of the character described in Ser. No. 08/046,438.

Turning particularly to FIGS. **34**, **35** and **36**, the apparatus of this latest form of the invention, can be seen to comprise a base **402** having a first portion **404**, a second portion **406**, a third portion **408**, which is disposed intermediate portions **404** and **406**, a fourth portion **409** and a fifth marginal portion **410** which circumscribes the first, second, third and fourth portions. As before, base **402** is preferably constructed of a thin moldable thermo plastic material which can be injection molded into the cross-sectional configuration shown in FIG. **36**. More particularly, first, second and fourth portions **404**, **406** and **409** of the base are molded so as to have upstanding central portions which are provided with fluid passageways or fluid channels **404***a*, **406***a* and **409***a* respectively. Provided on base **402** are connector means for interconnection of container means for containing a liquid component. The connector means are here shown as comprising chambers **414***a*, **414***b* and **414***c* which are adapted to mateably receive container means, such as medicament vials **416**, for containing a first liquid component. Vials **416** are adapted to be mated with chambers **414***a*, **414***b*, and **414***c* to accomplish filling the reservoirs of the device in a manner presently to be described. The reservoirs can also be filled via fill port means, here shown as septum assemblies **417***a*, **417***b* and **417***c* which are of the standard construction previously described herein.

Base **402** is provided with a dispensing means or outlet port assembly **420**, the configuration of which is best seen in FIG. **35**. The details of this outlet port assembly will be described presently.

Overlying a portion of base **402** is a deformable member shown here as an elastomeric, generally planar distendable membrane **422** which is of the character previously described herein and in Ser. No. 08/046,438. Superimposed over a portion of base **402** and membrane **422** in a membrane clamping relationship is a formed cover means, or cover assembly **424** which is preferably constructed of a heat formable thermo plastic material. Affixed to the cover member are breathable patches **45**, L-**1** and L-**2** of the character and function previously described. When cover means **424** is sealably interconnected with base **402** in the manner shown in FIGS. **35** and **36**, the cover means sealably encapsulates membrane **422** which, in turn, is sealably connected at the stratigic areas to base **402** (FIGS. **35** and **36**). Upraised portions **424***a*, **424***b*, and **424***c* (FIG. **34**) are closely received over the neck portions of chambers **414***a*. **414***b*, and **414***c* in the manner indicated in FIG. **37**.

Referring to particularly FIG. **34**, it can be seen that cover member **424** is provided with a first wall defining a first chamber **428** which is superimposed over portion **404** of base **402**. Cover member **424** also includes a second wall defining a second chamber **430** which is disposed over second portion **406** of base **402**. Third walls define a third chamber **432** which is disposed over portion **409**. As before, the inner walls of these chamber-defining portions provide engagement surfaces for engagement by distendable membrane **422** when the membrane is distended from a first position wherein it is proximate base **402** to a second distended position wherein it moves into proximity with the walls defining chambers **428**, **430**, and **432** of cover **424**. As best seen in FIGS. **34** and **35**, outlet port assembly **420** communicates with the interior of reservoirs R-**1**, R-**2** and R-**3** via passageway **435** (FIG. **35**). Reservoirs R-**1**, R-**2** and R-**3** are formed between portions **404**, **406** and **409** of base **402** and the interior surface **422***a* of membrane **422** in the manner shown in FIG. **36**.

With the construction described, reservoir R-**1** can be filled via the fluid introducing means of the invention which includes connector means or chamber **414***a* or it can be filled via septum **417***a*. Similarly, reservoir R-**2** can be filled via the connector means or chamber **414***b* or alternatively it can be filled via septum **417***b*. In like manner, reservoir R-**3** can be filled via septum **417***c* or filled via chamber **414***c*. In certain applications, one or more of the reservoirs can also be filled via septum **435***d* which is provided at one end of passageway **435** (FIG. **35**). As fluid is introduced via the fluid introducing means between membrane **422** and each of the first, second and third portions of the base, distendable membrane **422** will be distended from the first position wherein it is proximate the base to the second position shown in FIGS. **36** and **37** wherein it cooperates with the base to define the three reservoirs of this form of the invention. As indicated in FIG. **34**, the various septal ports are normally covered by removable caps "C".

Reservoirs R-**1**, R-**2**, and R-**3** communicate with passageway **435** via stub passageways **435***a*, **435***b*, and **435***c* respectively. Each of the stub passageways is provided with flow rate control means which control fluid flow therethrough. The flow rate control means are here shown as control mechanisms **440**, each of which comprises an internally threaded, upstanding cylindrical body portion **440***a*. As best seen in FIG. **38**, body portion **440***a* is integrally formed with base **402** and is adapted to threadably receive a control knob **442** having a terminal portion **442***a* which is substantially sealably receivably within passageway **435**. By threading knob **442** inwardly and outwardly of threads "T", portion **442***a* can be moved inwardly and outwardly of flow passageway **435** and in this way can block or precisely control the rate of flow of fluid flowing through the passageway. An elastomeric O ring **440***b* is provided in portion **440***a* to prevent leakage past the neck of knob **442**.

As before, each of the reservoirs can be vented by vent means comprising vent apertures V-**1**, V-**2**, and V-**3** (FIG. **34**) provided in cover **424**. Aperture V-**1** is covered by label **45** while apertures V-**2** and V-**3** are covered by breathable patches L-**1** and L-**2** respectively.

Referring particularly to FIGS. **34** and **35**, chambers **414***b* and **414***c* which form a part of the connector means of the invention, each have an additive-containing chamber **450** for containing an additive presentation means such as a scaffold or substrate generally designated in FIG. **35** by the numeral **452**. The additive presentation means or substrate **452** can be any type of substrate of the character shown in FIG. 45 of copending U.S. Ser. No. 08/046,438.

Each chamber **414***a*, **414***b* and **414***c* functions as a part of the connector means of the invention and each has a fluid flow path therethrough. Additive presentation means are provided within the fluid flow path of chambers **414***b* and **414***c* in the manner shown in FIG. **35**. Each of the chambers also has first and second ends, one of which communicates with one of the reservoirs and the other of which is initially sealed by a removable, tear-type sterility plastic cap or cover **453** (FIG. **34**). The chambers can be integrally molded with base **402** or they can comprise a glass vial connected to the base or, alternatively they can comprise any other suitable sterile container for housing the additive presentation means and for providing means for the interconnection therewith of the container means such as elution vials **416**.

Containers, or elution vials **416**, may be of the general character described in copending applicaton Ser. No. 07/986,375 and illustrated therein in FIGS. 1, 3, 4, 5 and 8 (numeral 16). Application Ser. No. 07/986,375 is incorporated herein by reference. Containers **416** are preferably sterile containers that include a fluid reservoir **416***a* (FIG. **35**) for containing the liquid component or parenteral fluid of the character defined in copending Ser. Nos. 08/046,438 and 07/983,375.

During the mixing step, containers **416** are telescopically receivable with one of chambers **414***b* or **414***c* in the manner shown in FIG. **35**. In the present form of the invention, each chamber **416***a* is closed by a penetrable piston **456** which is telescopically movable within chamber **416***a* from a first forward position to a rearward position proximate the closed end of container **416**. Piston **456** is provided with a plurality of circumferentially extending sealing beads **456***a* which sealably engage the inner walls **416***a* of container **416** as the piston moves rearwardly.

A tear-away-type removable sterility cap **458** initially closes the open end of the fluid container. After a selected container **416** has been filled with a suitable first component such as a parenteral fluid "F", piston **456** is inserted into the open end of the container and sterility cap **458** is emplaced over the assemblage thus formed so as to maintain the first component in a sterile, sealed condition until time of use.

Provided proximate the outboard end of each chamber **450** of the connector means **414***b* and **414***c* is a hollow needle assembly **460** which includes a hollow meedle **462**. Hollow needle assembly **460**, which communicates with the fluid flow path through the connector means, also includes a housing **460***a* which supports hollow needle **462**. Needle assembly **460** also includes a check valve **460** which prevents retrograde flow through the flow passageway leading to the reservoir (FIG. **37**). Housing **460***a* is positioned within chamber **450** so that hollow needle **462** extends outwardly toward the outboard end of the chamber. With this construction, fluid flowing inwardly through hollow needle **462** will flow past check valve **460** and through passageway **465**, which forms a part of the fluid flow path. The fluid then flows around, about and through the additive **467** which is presented to the fluid flow by the additive presentation means **452** in the manner indicated by the arrows in FIG. **35**.

In using the apparatus of the invention, caps **453** and **458** are first removed as indicated in FIG. **34**. Container **416** is then inserted into the open end of a selected connector means or container receiving chamber **414***b* or **414***c*. As the container is pushed inwardly, needle **462** will penetrate penetrable plug **456** of the container assembly in the manner shown in FIG. **35**. Continued inward travel of the container into the connector means causes piston **456** to move inwardly of the container forcing the fluid "F" contained therein to flow outwardly through hollow needle **462** past the check valve and into the fluid flow path within which the additive **467** is strategically positioned. Upon the container seating within the chamber, rotation of the chamber will cause threads **416***b* provided thereon to move into mateable engagement with threads **415** provided proximate the closed or inner end of the container receiving chamber. Locking tabs **416***a* provided on the container will then interlock with teeth "T" provided proximate the open end of chambers **414***b* and **414***c* (FIG. **34**) thereby preventing removal of the container. After the fluid "F" has mixed with the additive, the mixture thus formed will flow into the cooperating reservoir, as for example reservoir R-3, causing the distendable membrane to distend outwardly.

Reservoir R-1 can also be filled using a diluent vial of the character identified by the numeral **416** which is mated with the connector means or container receiving chamber **414***a*. Chamber **414***a* has a slightly different construction than that of chambers **414***b* and **414***c* in that it does not contain an internally disposed additive presentation means receiving chamber. Rather, needle **462***a* of this particular connector means communicates directly with a passageway "P" via check valve **460***b*. Passageway P, in turn, communicates directly with reservoir R-1 in the manner shown in FIG. **37**.

By mating container **416** with chamber **414***a* in the manner previously described, reservoir R-1 can be filled with a suitable diluent, parenteral or enteral fluid or it can be filled with any other liquid component of the character described in U.S. Ser. No. 08/046,438. As fluid flows between membrane **422** and base portion **404**, distendable membrane **422** will be distended in the manner shown in FIG. **36** to form reservoir R-1.

After the various reservoirs are filled, the fluid can be delivered to the patient via a delivery cannula which is threaded into delivery port **420**. The delivery cannula DC (FIG. **35**) includes a delivery spike "S" of a character well known to those skilled in the art.

With reservoirs R-1, R-2, and R-3 filled in the manner described, the fluid contained therein can be delivered to the patient in any desired sequence by sequentially opening flow control mechanisms **440**. Alternatively, part of the fluid contained within reservoir R-3 can be delivered to the patient and then all or a portion of a diluent contained in reservoir R-1 can be immediately administered to the patient. By way of example this delivery can then be followed by delivery of all or part of the fluid contained within reservoir R-2.

In another mode of operation, the delivery cannula DC can be primed using diluent from reservoir R-1. Then medicament from reservoir R-2 can be infused via cannula DC. Following this delivery sequence, cannula DC can be flushed with diluent from R-1 and finally medicament from R-3 can be infused. Subsequently, diluent from R-1 can once again be used to flush cannula DC and the patient can be maintained on KVO (keep vein open) via low rate delivery of diluent from R-1.

It is clear that with the unique design of the apparatus of this latest form of the invention, a wide variety of delivery protocals can be devised to deliver numerous

types of beneficial agents in various sequences over various time intervals.

Having now described the invention in detail in accordance with the requirements of the patent statutes, those skilled in this art will have no difficulty in making changes and modifications in the individual parts or their relative assembly in order to meet specific requirements or conditions. Such changes and modifications may be made without departing from the scope and spirit of the invention, as set forth in the following claims.

I claim:

1. A fluid delivery device for delivering fluids to a patient at a controlled rate comprising:

(a) a base having first, second and third adjacent portions and a fourth marginal portion circumscribing said first, second and third portions, said base having a fluid port;

(b) a distendable elastomeric membrane overlying said first, second and third portions of said base;

(c) cover means receivable over said base for encapsulating said membrane, said cover member having a first chamber defining wall superimposed over said first portion of said base, a second chamber defining wall superimposed over said second portion of said base, a third chamber defining wall superimposed over said third portion of said base, and marginal means for urging said membrane into sealing engagement with fourth portion of said base; and

(d) a fluid passageway interconnecting said first, second and third chambers; said fluid passageway being in communication with said fluid port of said base; said membrane being movable from a first position proximate said base to a second distended position proximate said first, second and third chamber defining walls of said cover means upon introduction of fluid under pressure into said fluid port of said base, said membrane in its distended position having a tendency to return to a less distended position.

2. A device as defined in claim 1 in which each of said first, second and third portions of said base include upstanding protuberances engagable by said membrane when said membrane is in said first position.

3. A fluid delivery device for delivering fluids to a patient at a controlled rate comprising:

(a) a base having first and second adjacent portions and a marginal portion circumscribing said first and second portions, said base having a fluid port in communication with a fluid passageway;

(b) a distendable elastomeric membrane overlying said first and second portions of said base;

(c) cover means receivable over said base for encapsulating said membrane, said cover member having a first chamber defining wall superimposed over said first portion of said base, a second chamber defining wall superimposed over said second portion of said base, and marginal means for urging said membrane into sealing engagement with said marginal portion of said base; and

(d) first fluid introducing means attached to said base for introducing fluid between said distendable membrane and said first and second portions of said base, said fluid introducing means comprising:

(i) connector means for interconnection of container means for containing a liquid component; and

(ii) container means for containing a liquid component, said container means being connectable with said connector means.

4. A device as defined in claim 3 in which said connector means has a fluid flow path therethrough in communication with said container means, and additive presentation means disposed within said fluid flow path, said additive presentation means being adapted to present an additive to the fluid flowing through said flow path.

5. A device as defined in claim 4 in which said container means comprises a vial having an internal chamber and a penetrable plunger movable within said chamber.

6. A device as defined in claim 5 in which said connector means further includes a hollow needle in communication with said fluid flow path, said hollow needle being adapted to pierce said penetrable plunger.

7. A device as defined in claim 6 further comprising a second fluid introducing means which includes first and second fill port means operably associated with first and second portions, respectively for introducing fluid between said distendable membrane and said first and second portions of said base.

8. A device as defined in claim 7 in which said fill port means comprise septal ports.

9. A device as defined in claim 4 in which said additive presentation means comprises a scaffold having an additive removably carried thereby.

10. A fluid delivery device for delivering fluids to a patient at a controlled rate comprising:

(a) a base having first, second and third portions and a marginal portion circumscribing said first, second and third portions, said base having a fluid port in communication with a fluid passageway;

(b) a distendable elastomeric membrane overlying said first, second and third portions of said base;

(c) cover means receivable over said base for encapsulating said membrane, said cover member having a first chamber defining wall superimposed over said first portion of said base, a second chamber defining wall superimposed over said second portion of said base, a third chamber defining wall superimposed over said third portion of said base; and

(d) first fluid introducing means attach to said base for introducing fluid between said distendable membrane and said first, second and third portions of said base, said fluid introducing means comprising:

(i) connector means for interconnection of container means for containing a fluid; and

(ii) container means for containing a fluid, said container means being connectable with said connector means.

11. A device as defined in claim 10 in which said connector means includes a connector chamber having fluid flow path therethrough in communication with said container means, and additive presentation means disposed within said fluid flow path, said additive presentation means comprising a substrate having an additive removably affixed thereto, whereby said additive will be added to the fluid flowing through said flow path.

12. A device as defined in claim 11 in which said container means comprises a vial having an internal chamber containing a diluent and a penetrable plunger movable within said chamber.

13. A device as defined in claim 12 in wich said connector means further includes a hollow needle in communication with said fluid flow path, said hollow needle being adapted to pierce said penetrable plunger.

14. A device as defined in claim 13 further comprising a second fluid introducing means further includes first and second fill port means operably associated with said first and second portions, respectively, for introducing fluid between said distendable membrane and said first and second portions of said base.

* * * * *