United States Patent [19]

Oliver

[11] **Patent Number: 4,787,126**

[45] **Date of Patent: Nov. 29, 1988**

[54] **METHOD OF FABRICATING DARK FIELD COAXIAL ULTRASONIC TRANSDUCER**

[75] Inventor: **David W. Oliver**, Schenectady, N.Y.

[73] Assignee: **General Electric Company**, Schenectady, N.Y.

[21] Appl. No.: **126,325**

[22] Filed: **Nov. 30, 1987**

Related U.S. Application Data

[62] Division of Ser. No. 934,520, Nov. 24, 1986, Pat. No. 4,760,304.

[51] **Int. Cl.**[4] **H01L 41/22**

[52] **U.S. Cl.** **29/25.35**; 264/22; 264/225; 264/275; 264/320; 310/365; 310/371; 310/800

[58] **Field of Search** 29/25.35; 310/800, 365, 310/371, 336; 264/22, 225, 275, 320

[56] **References Cited**

U.S. PATENT DOCUMENTS

2,616,198	11/1952	Sewell	264/293 X
4,346,505	8/1982	Lemonon et al.	29/25.35
4,384,394	5/1983	Lemonon et al.	29/25.35

Primary Examiner—Carl E. Hall

Attorney, Agent, or Firm—Donald R. Campbell; James C. Davis, Jr.; Paul R. Webb, II

[57] **ABSTRACT**

A dark field ultrasonic transducer is constructed with an outer annular spherical or conical transducer element and an inner spherical element. The outer annular element is excited and insonifies a small portion of a part surface near a discontinuity or crack with longitudinal waves or with surface waves. The inner dark field element is not focused to be sensitive to either reflected sound or waves reradiated from the surface waves, but detects sound scattered from surface discontinuities such as a crack edge. When surface waves strike a crack edge and restrike it after reflection from the bottom of the crack, two pulses are received and the time delay between them is a measure of crack depth. The crack shape and crack depth profile are determined as the part is scanned. A sphere-cone transducer, the preferred embodiment, is fabricated by stretching thin piezoelectric polymer film over a tool having a ball embedded in a conical surface.

2 Claims, 10 Drawing Sheets

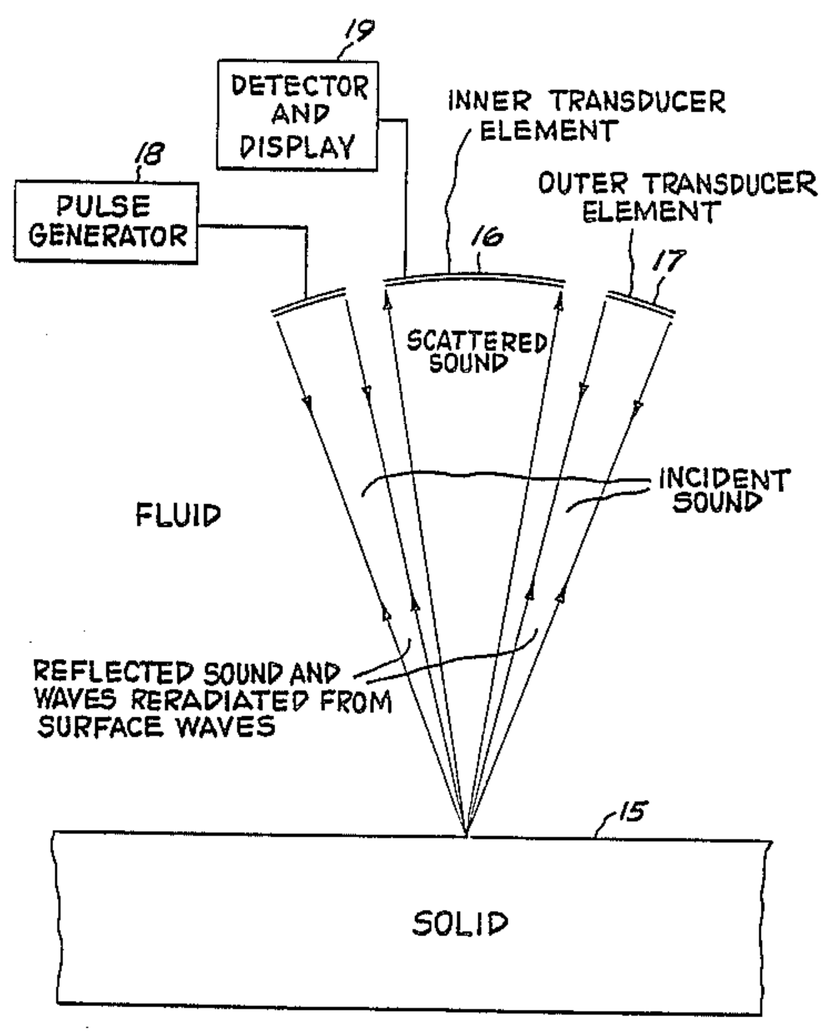

FIG. 1

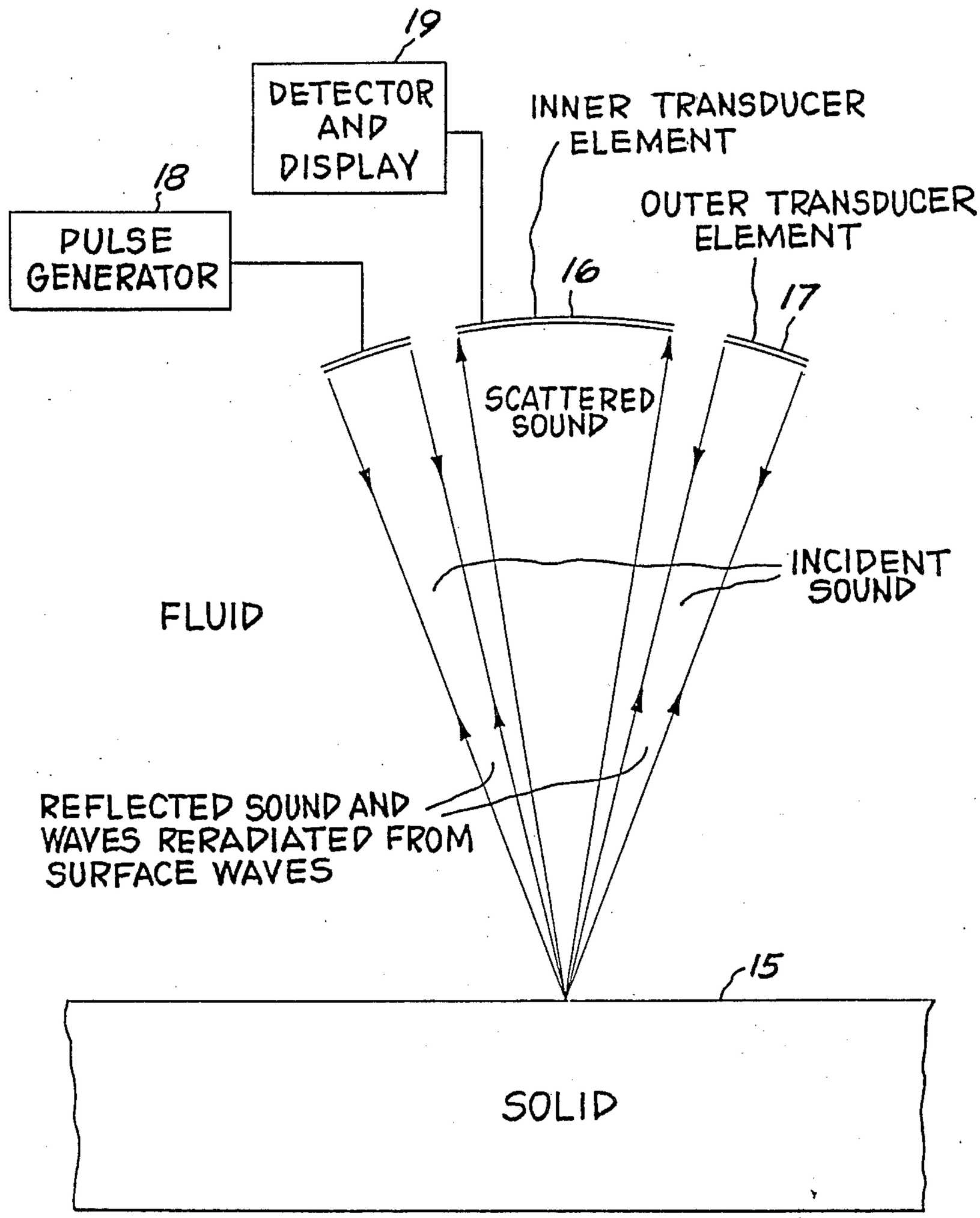
19
DETECTOR AND DISPLAY
18
PULSE GENERATOR
INNER TRANSDUCER ELEMENT
OUTER TRANSDUCER ELEMENT
16
17
SCATTERED SOUND
INCIDENT SOUND
FLUID
REFLECTED SOUND AND WAVES RERADIATED FROM SURFACE WAVES
15
SOLID

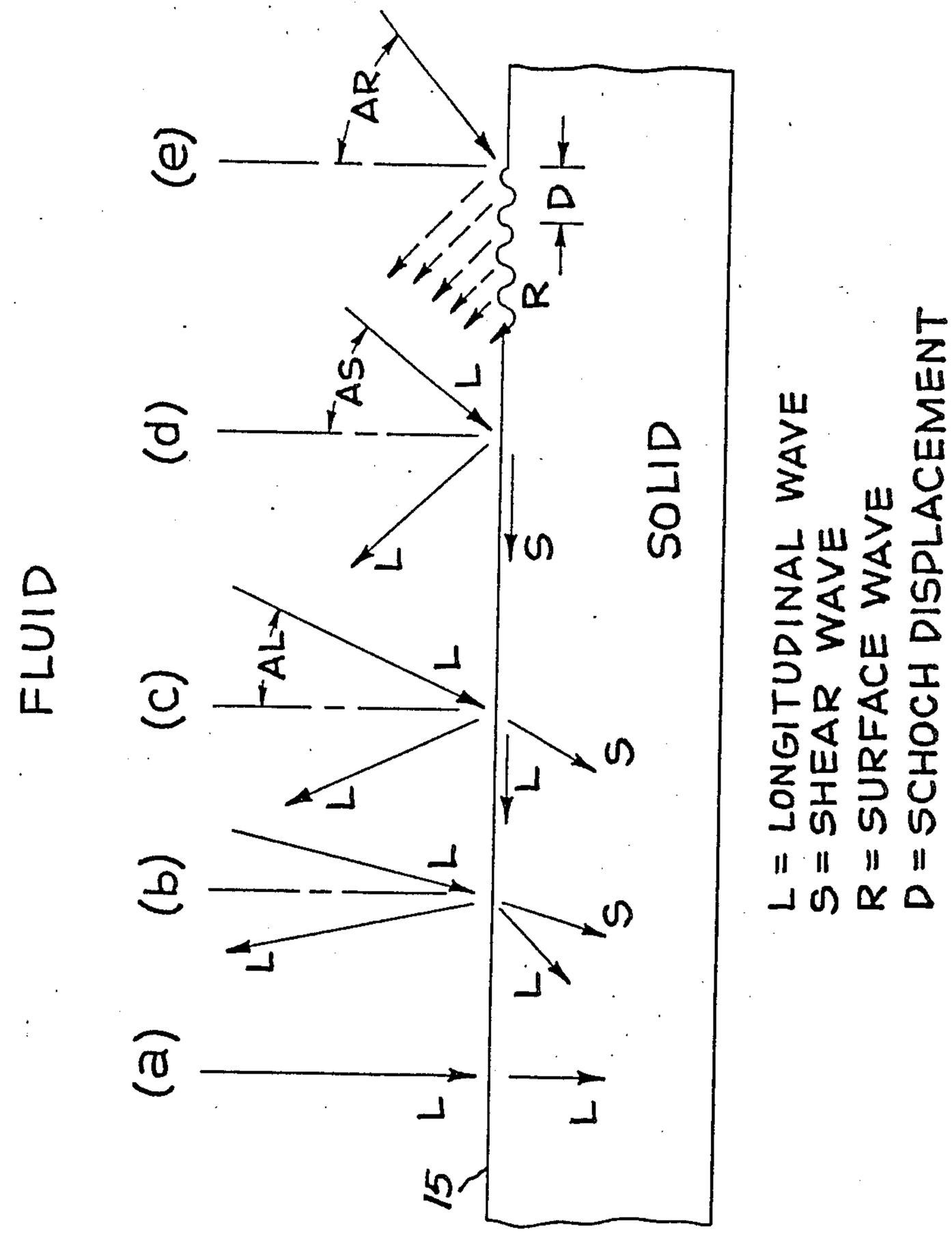
FIG. 2
FLUID
SOLID
(a)
(b)
(c)
(d)
(e)
L
S
R
D
AL
AS
AR
15
L = LONGITUDINAL WAVE
S = SHEAR WAVE
R = SURFACE WAVE
D = SCHOCH DISPLACEMENT

FIG. 3

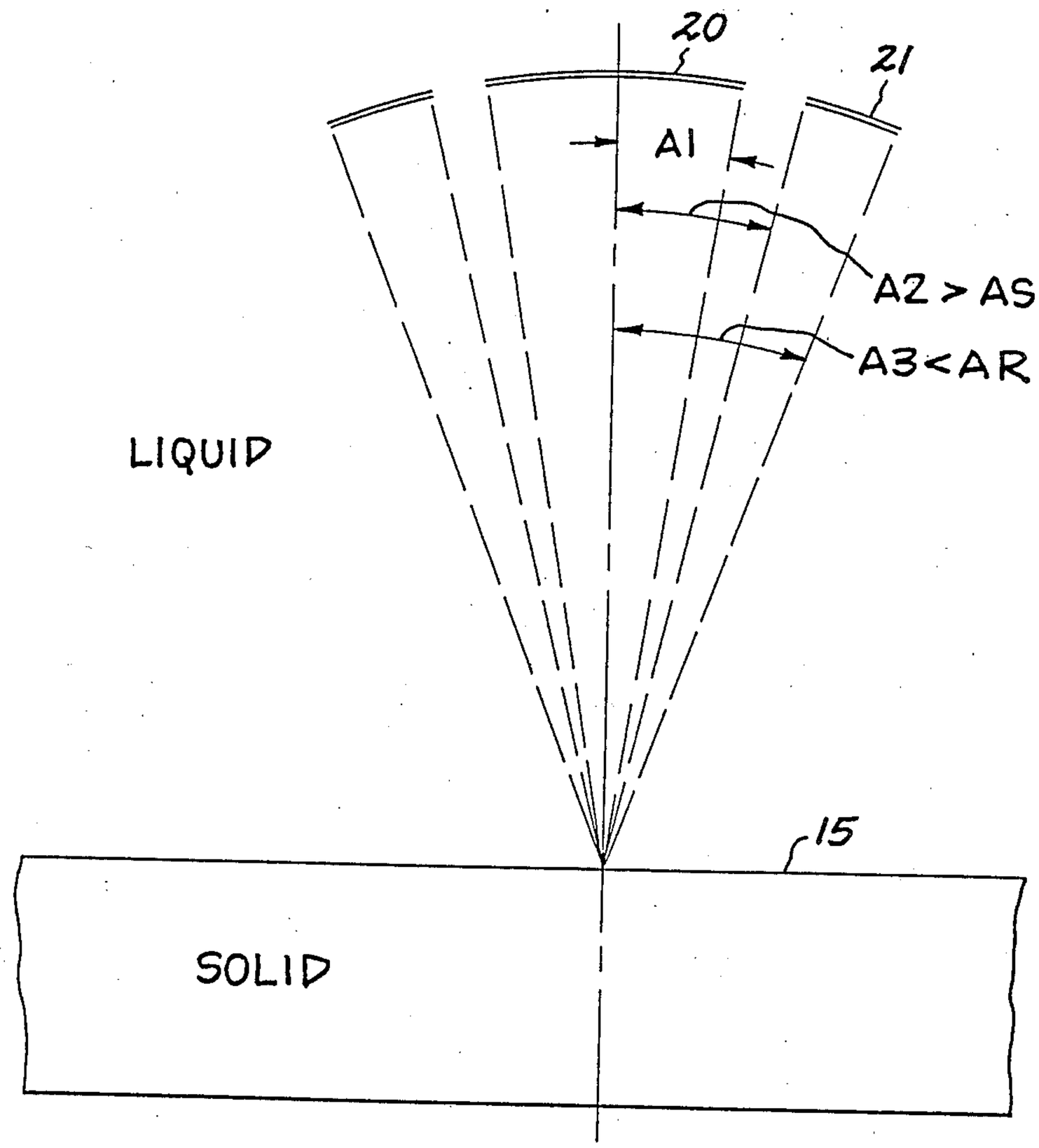

FIG. 4

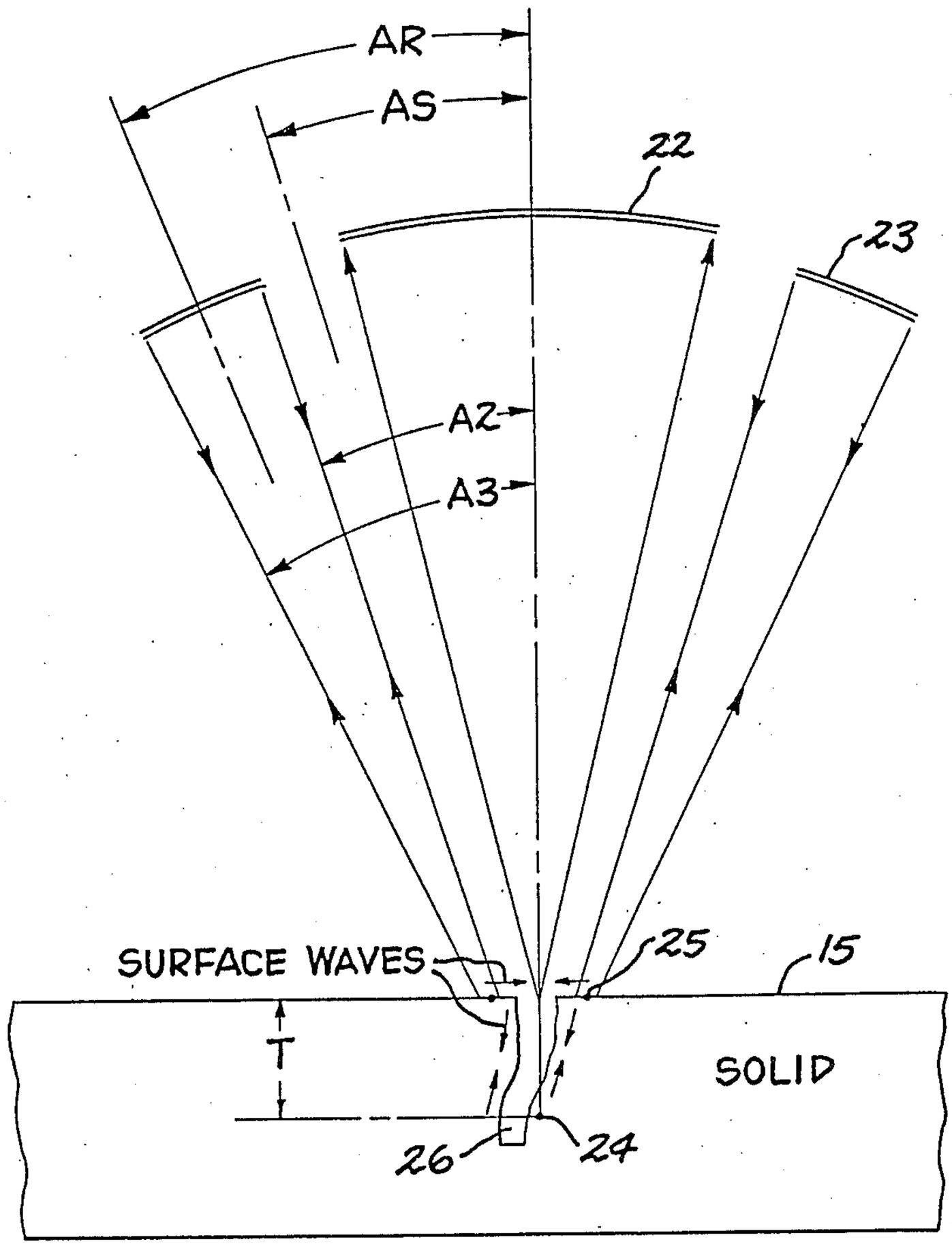

FIG. 5

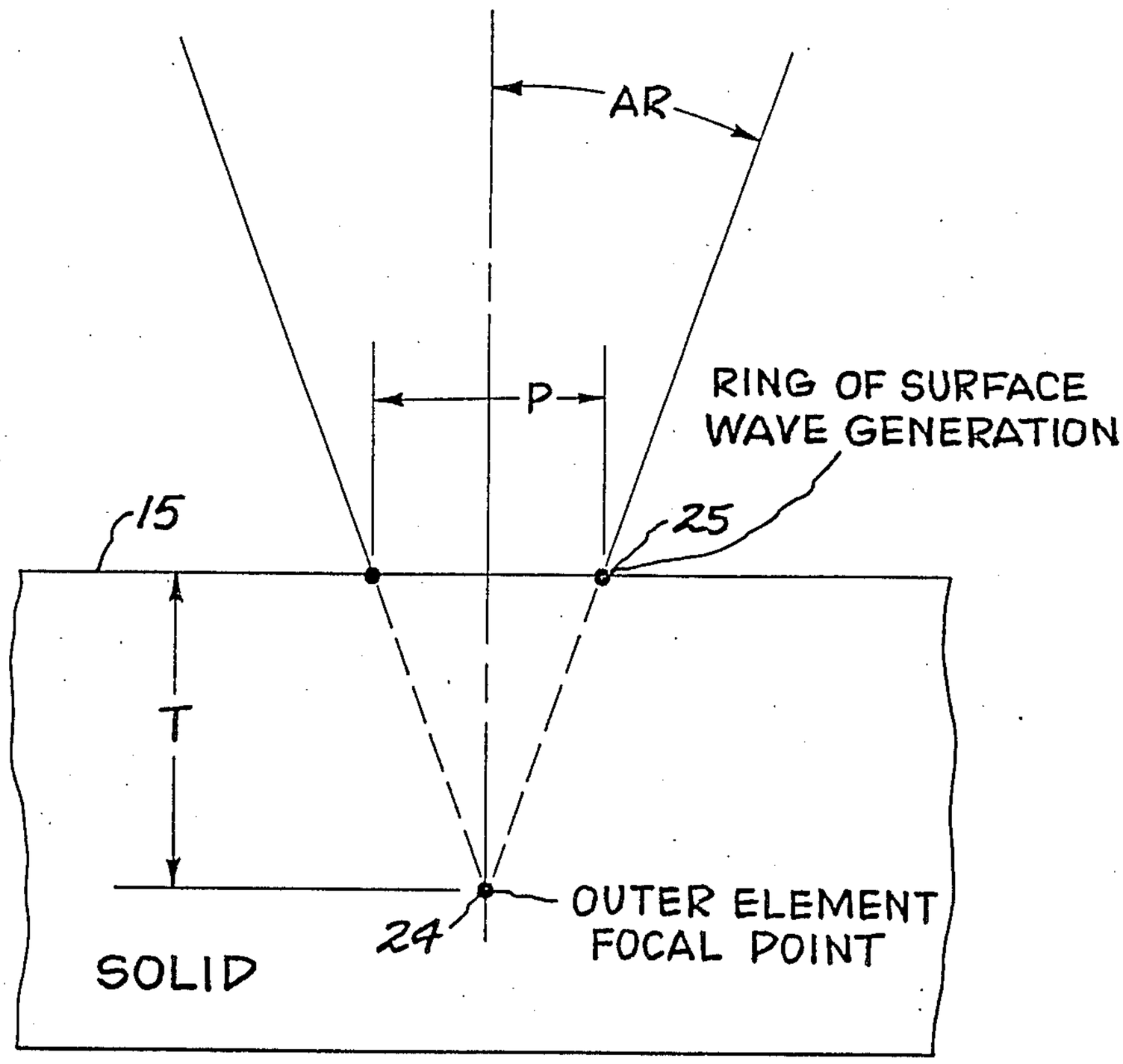
AR
P
RING OF SURFACE
WAVE GENERATION
15
25
T
24
OUTER ELEMENT
FOCAL POINT
SOLID

FIG. 6

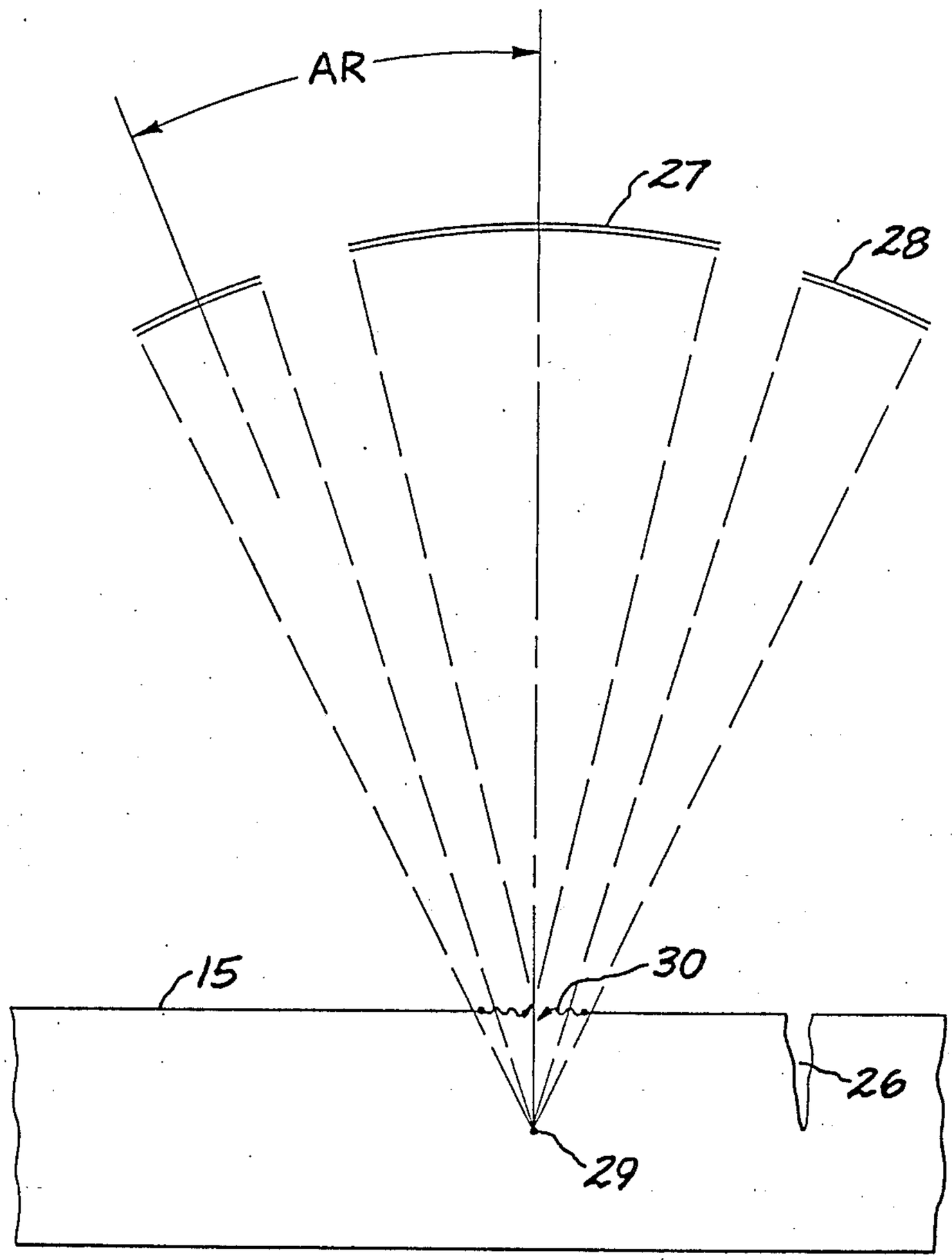

FIG. 7

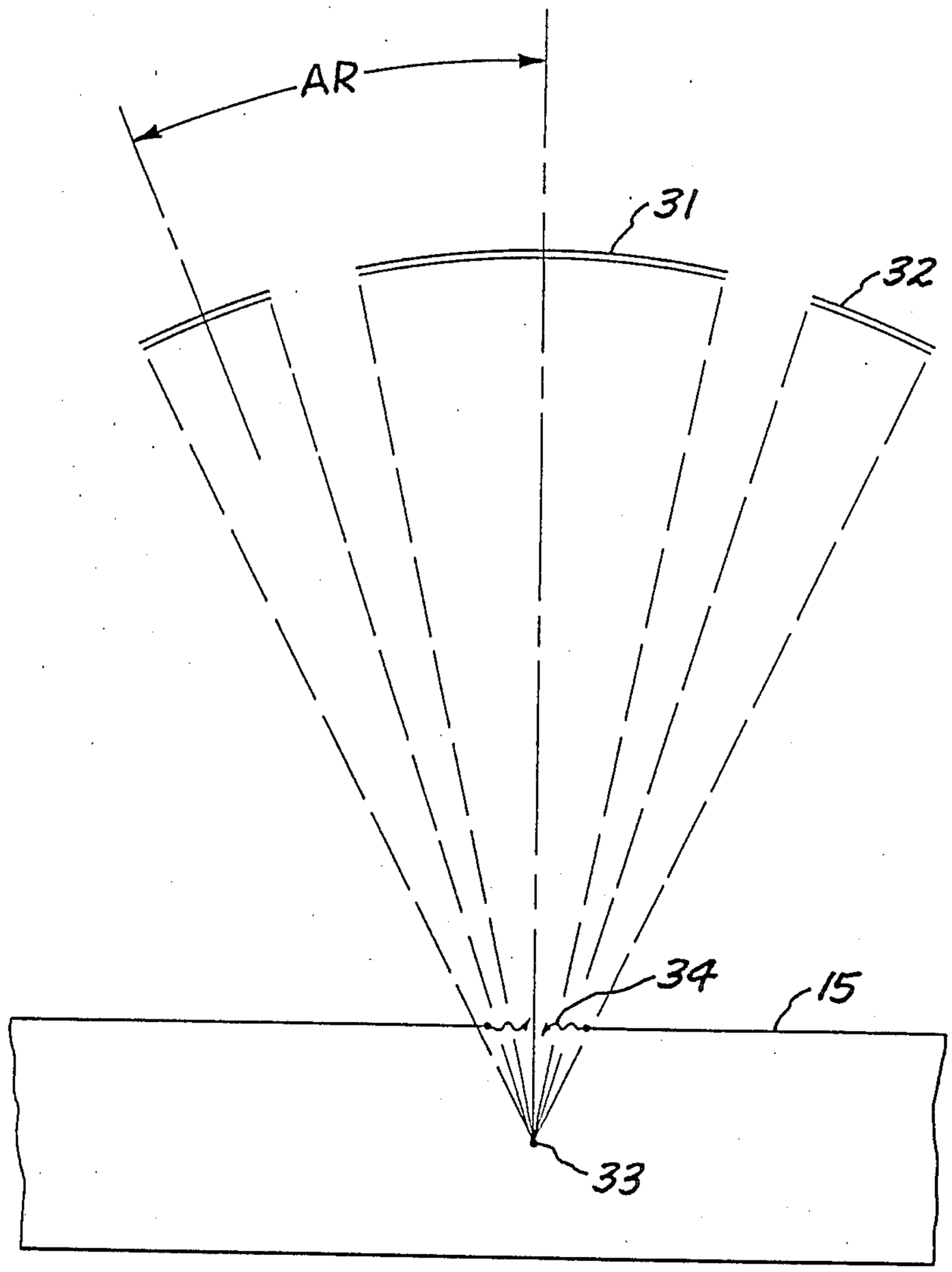

FIG. 8

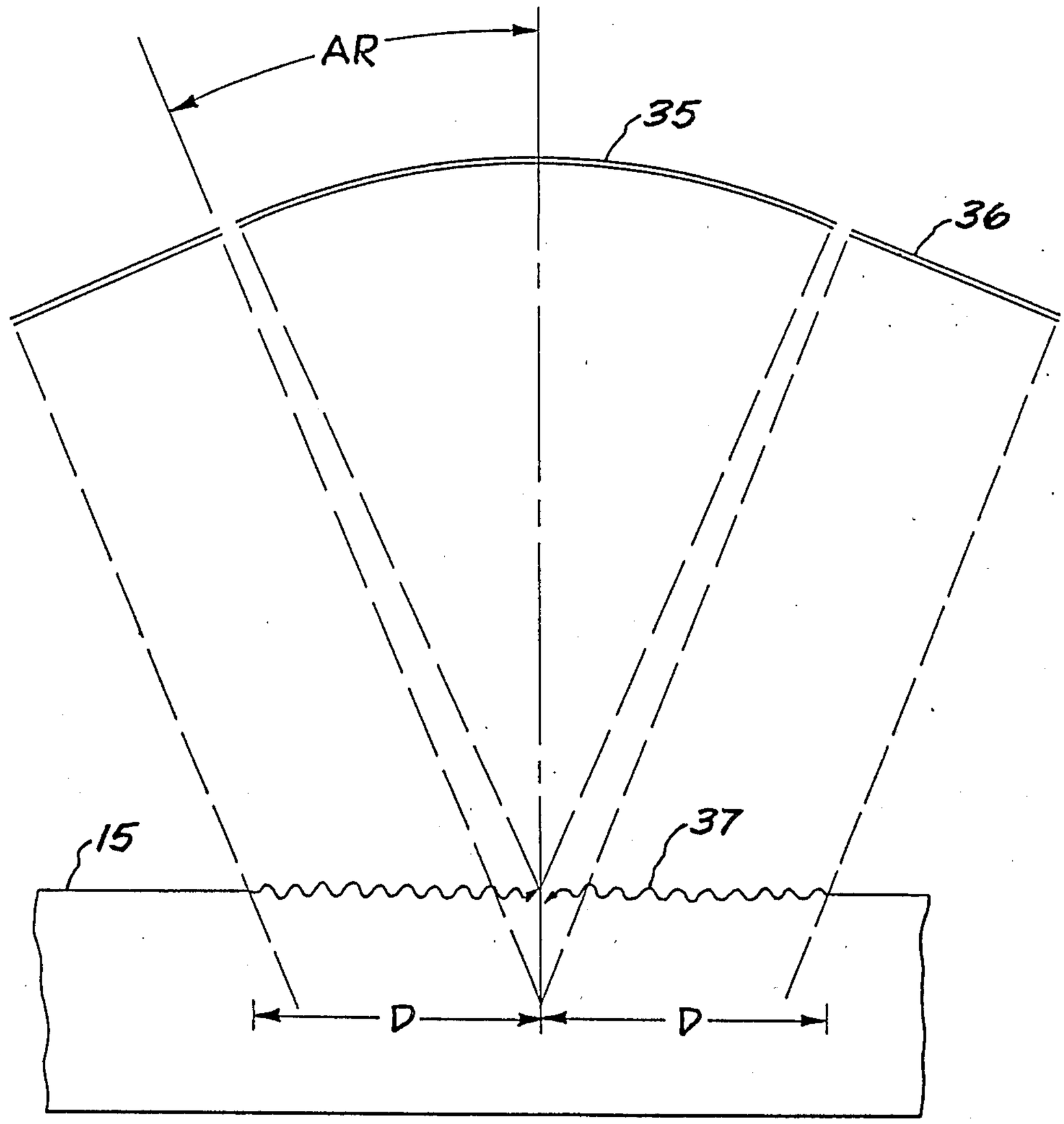

FIG. 9

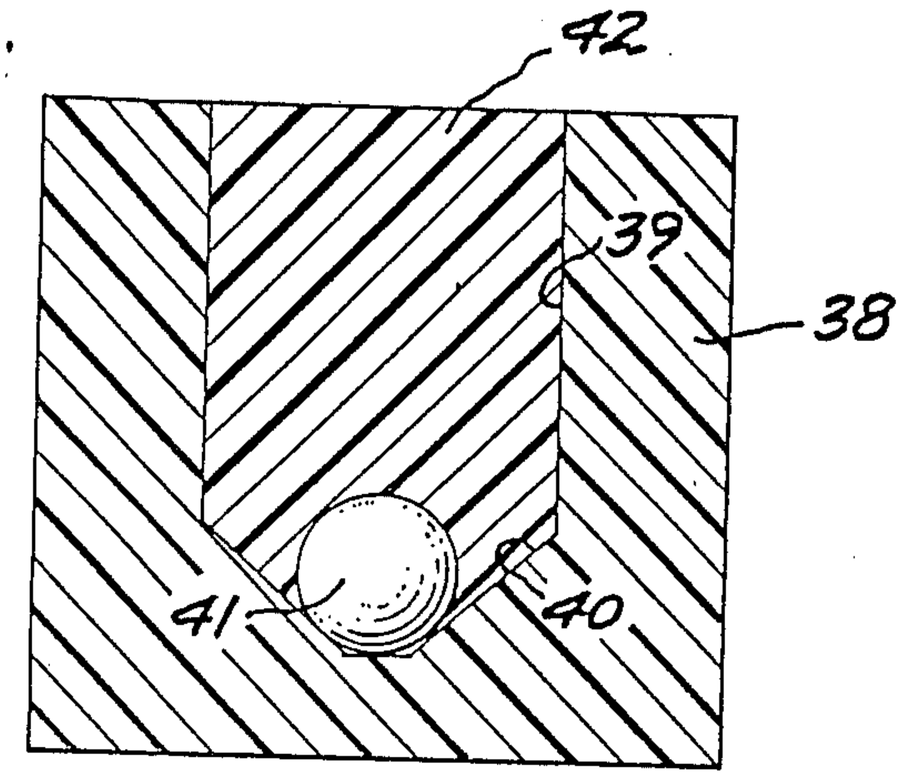

FIG. 10

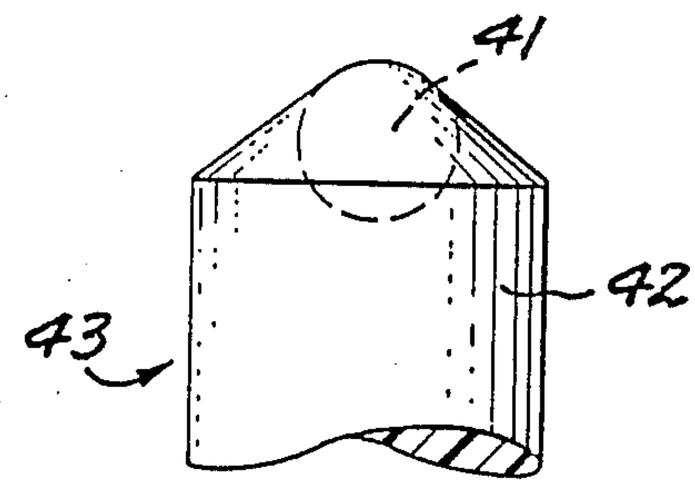

FIG. 11

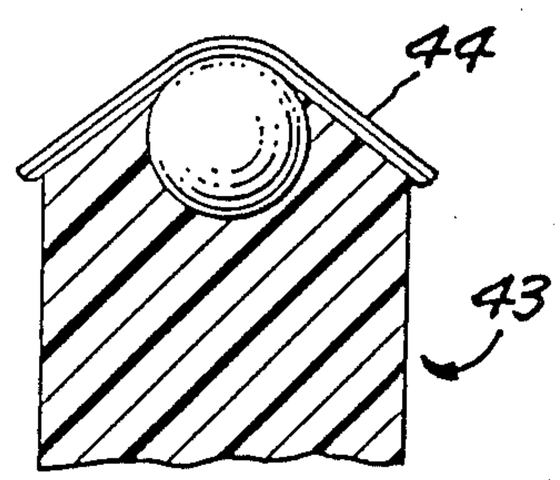

FIG. 12

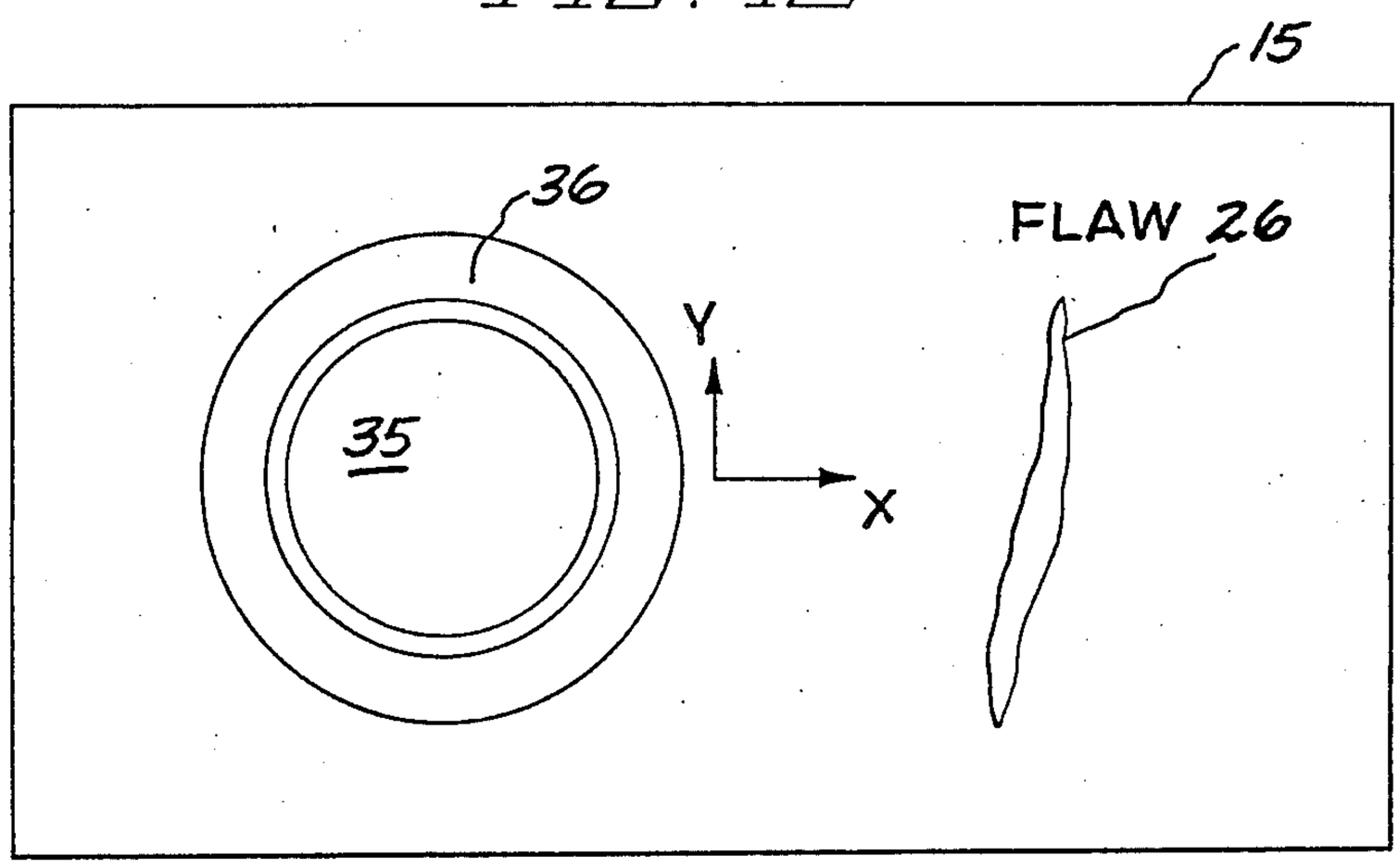

FIG. 13

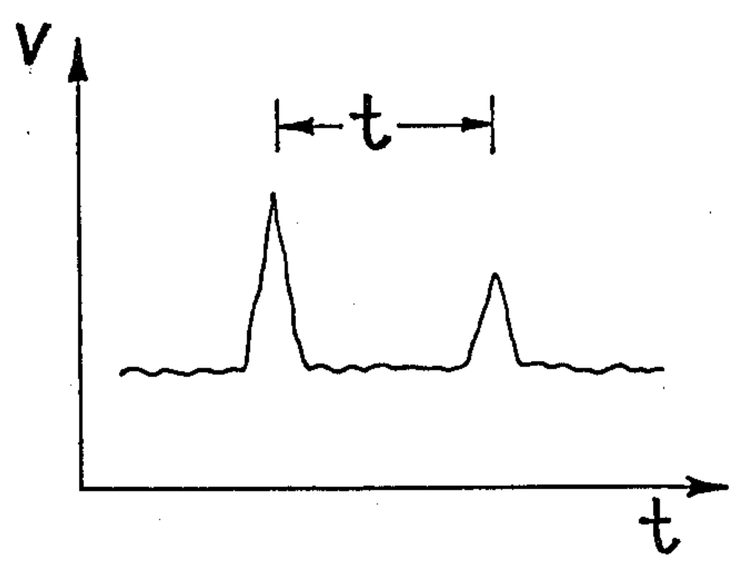

FIG. 14

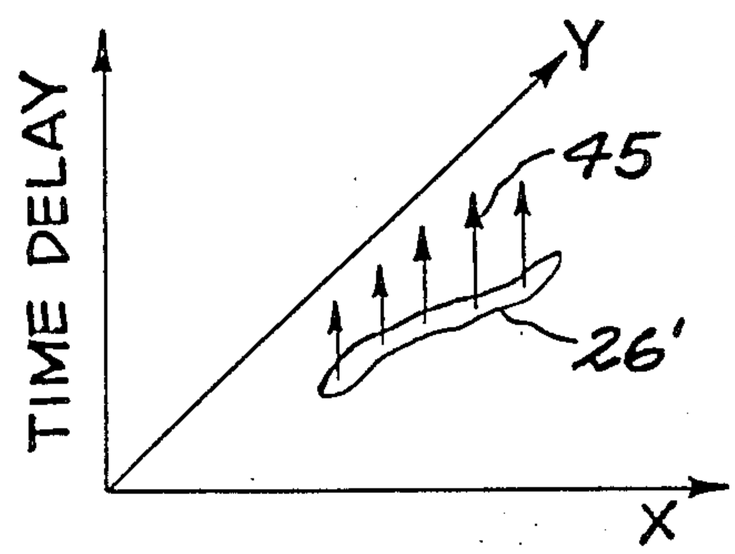

METHOD OF FABRICATING DARK FIELD COAXIAL ULTRASONIC TRANSDUCER

This application is a division of application Ser. No. 934,520 filed Nov. 24, 1986 now U.S. Pat. No. 4,760,304.

BACKGROUND OF THE INVENTION

This invention relates to ultrasonic transducers for nondestructive evaluation and their fabrication, and especially to dark field transducers to inspect a solid part for flaws and cracks.

Several NDE techniques such as eddy current, fluorescent penetrant, magnetic particle, and ultrasonic surface wave, exist for locating near surface cracks in parts. With some of these it is possible to measure crack length and to measure average crack depth. It is desirable, in addition to determining crack shape, to measure crack depth along the crack in order to make cost effective part rejection decisions and to provide information for fatigue predictions. Existing methods of NDE do not provide capability for measuring crack depth profiles, and there is a need to estimate the size of other types of surface flaws.

In the field of optics, dark field illumination is known in which the illuminating beam is a hollow cone of light; the object is viewed with a center lens which collects scattered light. The principle has not been applied to ultrasonic transducers, however.

SUMMARY OF THE INVENTION

An object of the invention is to determine surface irregularities, including crack depth profile, nondestructively using dark field coaxial ultrasonic transducers.

Another object is to provide dark field coaxial ultrasonic transducers using longitudinal and surface wave insonification, and having an inner dark field element to detect ultrasonic scattering resulting from mode conversion at a surface discontinuity or from scattering from the discontinuity at angles near but not including 180°, i.e. not including backscattering.

Another object is the provision of a method of fabricating a sphere-cone embodiment of a dark field transducer from thin piezoelectric film.

The dark field ultrasonic transducers are comprised of only two coaxial transducer elements, an outer annular transmitting element and inner detecting transducer element. They are constructed for insonification of the surface with longitudinal waves or with surface waves, or with both. The specific embodiments follow from the manner in which reflection, refraction, and mode conversion vary with the angle of incidence of the longitudinal wave in the fluid. At an angle of incidence greater than the shear critical angle (see FIG. 2) sound is totally reflected and neither shear waves or longitudinal waves are transmitted into the solid part. When the angle of incidence is increased further to the Rayleigh critical angle, a surface wave is generated and propagates along the solid surface. The surface wave reradiates into the fluid as longitudinal waves, but there is an apparent shift in the apparent point from which the longitudinal waves leave the surface known as the Schoch displacement.

These dark field transducers have an outer annular element which is excited and emits acoustic waves that are incident on the surface of the solid body at an angle

such that reflected sound waves from the surface do not impinge on the inner element. The inner transducer element is spherical and has its focal point on or close to the surface of the solid body and detects sound scattered and reradiated from surface discontinuities and cracks while being insensitive to any reflected longitudinal waves or to reradiated longitudinal waves from surface waves.

A dark field transducer for longitudinal insonification has an outer element with an angular extent between an inner angle greater than the shear critical angle and an outer angle less than the Rayleigh critical angle, whereby incident longitudinal waves are totally reflected.

The principal embodiments are dark field transducers for surface wave insonification. The outer transducer element is spherical or conical. The former has an angular extent from an inner angle greater than the shear critical angle to an outer angle greater than the Rayleigh critical angle; incident longitudinal waves are converted to surface waves that propagate inwardly along the surface of the solid body. The inner and outer elements are confocal or nonconfocal. The sphere-cone transducer configuration has a conical outer element to generate plane waves that are incident on the surface of the solid body at an angle equal to the Rayleigh critical angle.

Another feature of the invention is that the diameter of the surface wave generation ring is desirably less than or equal to the Schoch displacement, to prevent significant leakage of surface wave energy back into the fluid as longitudinal waves.

The invention also encompasses a system to detect the shape and crack depth profile of cracks in a part, preferably using a surface wave dark field transducer. Surface waves generated on the part are scattered upon encountering a crack edge, reradiating as a first longitudinal wave and generating a surface wave which reflects from the bottom of the crack and returns to the crack edge and reradiates as a second longitudinal wave. The inner dark field transducer element detects the first and second longitudinal waves reradiated from the crack edge and generates voltage pulses. Means are provided to determine the time delay between these pulses and thus crack depth at locations along the crack length as the part is scanned.

Another aspect of the invention is a method of fabricating a sphere-cone dark field ultrasonic transducer using thin piezoelectric polymer film such as PVDF. A tool with which the thin film is shaped is made by placing a metal ball at the bottom of a cone in a mold and filling the bore and connecting portion of the cone with material such as epoxy. After curing the epoxy the tool is removed from the mold.

BRIEF DESCRIPTION OF THE DRAWINGS

FIG. **1** is a system diagram illustrating features of a dark field ultrasonic transducer system.

FIG. **2** shows the manner in which reflection, refraction, and mode conversion vary with the angle of incidence of the longitudinal acoustic wave in the fluid.

FIG. **3** shows a dark field transducer for longitudinal insonification.

FIG. **4** illustrates a non-confocal dark field transducer for surface wave insonification.

FIG. **5** is a diagram to explain selection of the diameter of the surface wave generation ring in FIG. **4** to be less than the Schoch displacment.

FIGS. 6 and 7 show alternate embodiments of dark field transducers which have spherical elements and generate surface waves.

FIG. 8 shows a sphere-cone dark field transducer for more efficient surface wave insonification.

FIG. 9 is a cross sectional view of a mold to make a tool with which to manufacture the sphere-cone transducer.

FIG. 10 is a side view of the foregoing tool.

FIG. 11 illustrates stretching thin piezoelectric polymer film over the tool to form a dark field transducer.

FIG. 12 illustrates scanning a part which has a surface-breaking crack.

FIG. 13 shows a received signal and pulses indicating the top and bottom of a crack in the part.

FIG. 14 illustrates one type of display of the crack shape and crack depth along its length.

DETAILED DESCRIPTION OF THE INVENTION

The dark field ultrasonic transducers are non-contacting and use an ambient fluid, which may be water, about the solid part **15** to be inspected. The dark field transducers consist of two coaxial transducer elements as shown in FIG. **1**, an inner transducer element **16** and an annular outer transducer element **17**. Both elements have a thin central piezoelectric layer and thin metallic electrodes on both surfaces. The outer annular element **17** is connected to a pulse generator **18** or other excitation source, and insonifies a small portion of the part surface near a discontinuity or crack with longitudinal waves or with surface waves. The inner dark field element **16** is not focused to be sensitive to either reflected sound or waves reradiated from surface waves. Inner transducer element **16** is connected to a detector, processor and display **19**, and detects scattered sound. The ultrasonic scattering detected by the dark field element **16** results from mode conversion at a surface discontinuity or from scattering from the discontinuity at angles less than 180°. The inner and outer transducer elements **16** and **17** of this transducer configuration are spherical, coplanar, and confocal. The elements are focused on the sample surface at the discontinuity or crack edge.

The illustrative embodiments of a dark field transducer in FIGS. **3–8** follow from the manner in which reflection, refraction, and mode conversion vary with angle of incidence of the longitudinal wave in the fluid, as shown in FIG. **2**. FIG. **2**(*a*) shows a longitudinal wave L, incident normal to the surface, and transmitted into the solid as a longitudinal wave. FIG. **2**(*b*) shows an incident angle less than the critical longitudinal angle, AL, resulting in transmission of both shear waves S and longitudinal waves into the solid. In FIG. **2**(*c*). the incident longitudinal wave is at the critical longitudinal angle, AL, where longitudinal propagation in the solid ceases and the transmitted wave has become a shear wave. When the incidence angle is increased further to the shear critical angle, AS, sound is totally reflected as shown in FIG. **2**(*d*). The shear wave does not leave the surface of the solid. When the angle of incidence is increased further to the Rayleigh critical angle, AR, a surface wave R propogates along the solid surface. As the surface wave propogates in the presence of the fluid, it reradiates into the liquid as a longitudinal wave. This reradiated wave, shown in FIG. **2**(*e*) as a dashed arrow, interferes with the reflected longitudinal wave. The result is a lateral shift in the apparent point from which the longitudinal waves leave the surface, Schock displacement D. Refer to M. A. Breazeale et al, Jr. of Applied Physics, Vol. 48, February 1977, pp. 530–537.

The critical angles for a superalloy, Rene **95**, and water are approximately: AL=13.6°, AS=28.8°, AR=31.2°. For many materials there is no more than three or four degrees difference between AS and AR.

A dark field transducer for longitudinal insonification is shown in FIG. **3**. The inner, spherical, detecting transducer element **20** is limited in angle to Al; the outer, annular, spherical, transmitting transducer element **21** occupies an angular sector between inner and outer angles A2 and A3. When A3 is made less than the Rayleigh critical angle AR there is longitudinal excitation. When A3 is made less than AR and A2 is made greater than the shear critical angle AS, there is no propogation into the solid body **15** and the dark field transducer is sensitive primarily to surface discontinuities. The two transducer elements **20** and **21** are confocal, i.e. the focal points are at the same point. To explain further, acoustic waves emitted by annular outer element **21** are totally reflected at the surface of body **15** at an angle larger than AS and thus are not detected by the inner dark field element **20**. Longitudinal waves incident on a surface discontinuity are scattered in many directions and the scattered sound is detected by inner transducer element **20**. Longitudinal waves incident on a crack edge (as in FIG. **4**) are scattered by the crack edge; some of the acoustic energy is detected by inner element **20** and some travels to the bottom of the crack and back up again to the crack edge where it is scattered so that a satellite pulse is generated by the inner piezoelectric element. The time delay between the two voltage pulses is a measure of crack depth at that location.

A first embodiment of a dark field transducer for surface wave insonification is illustrated in FIG. **4**. Inner element **22** and outer annular element **23** are both spherical and are coaxial but are not coplanar. The latter helps to decouple the inner element from the outer. In this case angle A2 is made larger than the shear critical angle AS so that no rays propogate into the solid part **15**, and angle A3 is made larger than the Rayleigh critical angle AR so that surface waves will be generated on the solid. The surface waves are indicated by arrows. The inner and outer elements **22** and **23** are non-confocal. The focal point of inner element **22** is on the surface of solid part **15**, and the focal point **24** of outer element **23** is placed a short distance below that of the inner element and the surface of the part. This results in the generation of a ring of surface waves which propogate inwardly on the surface through the focus of the inner element **22**. The maximum diameter of the surface wave generation ring is indicated at **25**.

The incident surface wave energy is scattered when it encounters a sharp discontinuity, like the edge of a surface crack **26**, reradiating as longitudinal waves and generating a surface wave which travels down the crack and reflects from the bottom of the crack, returns to the crack tip, and reradiates as a longitudinal wave. Two pulses are received by the inner detecting element **22** from the crack edge, a first pulse when the incident surface wave excitation hits the crack edge, and a second satellite pulse when the surface wave traveling down the crack and than back up again strikes the crack edge. The time delay between these pulses (see FIG. **13**) is a measure of crack depth at a particular location along the crack length.

Since the surface waves leak energy back into the fluid as longitudinal waves, it is desirable that their

propagation distance be small enough that intensity is high but large enough for good decoupling between the inner and outer elements **22** and **23**. This is insured by selecting the diameter of the surface wave generation ring **25** to be less than or equal to the Schoch displacement D. The configuration is shown in FIG. **5**, where P is the diameter of the ring **25** of surface wave generation and P is less than or equal to the Schoch displacement D. The ring diameter P and the Rayleigh critical angle AR determine the distance T between the focal point of the inner element **22** and the outer element **23** ($T=P/2 \tan AR$).

The dark field ultrasonic transducer may also be employed with continuous excitation. A more complete analysis of a pulsed transducer shows that the inner dark field transducer element **22** responds to several excitations. There is cross-coupling, electrical and mechanical, with the initial pulse from the outer element **23**. The reflected sound and waves reradiated from surface waves cause an output even though the inner element is not in focus for these excitations. The two pulses received by the element from the crack edge have been described. In the case of continuous excitation there is no time separation between the four received signals. The first two of these, cross-coupling and reflected or reradiated signals, are minimized by the transducer design and may be balanced out by operation in a bridge circuit such as a balanced hybrid. The depth information is then obtained by examining the interference of the first crack edge signal and the satellite crack edge signal as frequency is swept.

FIG. **6** illustrates another embodiment of a dark field ultrasonic transducer for surface wave insonification. Inner and outer transducer elements **27** and **28** are spherical, non-confocal, and coplanar. The outer transducer element **28** has an angular extent between an inner angle greater than the shear critical angle of the solid and an outer angle greater than the Rayleigh critical angle. Inner element **27** is focused on the surface of part **15** and outer annular element **28** has an offset focal point **29** close to the surface of the part. When the outer element **28** is excited and emits acoustic waves, surface waves **30** are generated on the surface of the part. The diameter of the surface wave regeneration ring is preferably less than the Schoch displacement.

FIG. **7** shows a confocal spherical embodiment of the dark field transducer which generates surface waves Inner and outer transducer elements **31** and **32** are spherical and coplanar, and have a common focal point **33** which is close to the surface of part **15** so that a ring of surface waves **34** is generated and its maximum diameter is again made less than the Schoch displacement. An advantage of the FIG. **7** transducer compared to FIG. **6** is that the surface wave trains propagating from the circumference toward the center of the ring are in step and constructively interfere to maximize the insonification at the center of the ring.

Referring to FIG. **8**, the preferred embodiment of a dark field transducer to generate surface waves for flaw characterization has a spherical inner transducer element **35** and a coaxial, annular, conical outer element **36**. The inner element **35** is focused at or just below the surface of part **15**. Conical outer element **36** is tangent to or coplanar with the edge of inner element **35**, and its inner edge typically is at an angle equal to or greater than the Rayleigh critical angle AR. Conical outer element **36** transmits plane waves; these are incident on the surface of part **15** at an angle equaling or exceeding AR so that the incident acoustic waves are converted to surface waves **37** which propogate inwardly toward the focus of inner element **35**. This acoustic lens configuration more efficiently converts the incident beam into surface waves. All sound waves that create Rayleigh waves stay in phase and this dark field transducer fully uses the outer transducer element **36**. The diameter of the surface wave generation ring, measured from the point where the ray from the outer edge of conical element **36** is incident on the sample surface, is no greater than the Schoch displacement.

A method of fabricating such a sphere-cone dark field transducer from thin piezoelectric polymer film is explained with reference to FIGS. **9–11**. High frequency ultrasonic transducers, greater than 10 MHz and up to 45 MHz, are made with PVDF (polyvinylidene difluoride) piezoelectric elements. The film is very thin and coated with a very thin layer of medal. The polymer film is shaped and given the desired curvature using the special tool shown in these figures.

A Teflon ® mold **38** has a cylindrical bore **39** leading to a conical cavity **40**. A metal ball bearing **41**, say $\frac{1}{4}''$ in diameter, is placed at the bottom of the cone and the cylindrical bore and connecting portion of the conical cavity are filled with a filler material **42** such as thermosetting epoxy resin. After curing and hardening the epoxy, the mold **38** is removed leaving the tool **43** which has the metal ball embedded in a conical epoxy surface. The end of tool **43** has the desired sphere-cone shape. Metal is selectively removed from the thin coated PVDF film **44** to delineate the electrodes and inner and outer transducer elements, and the film is stretched over the end of tool **43** to shape the transducer and give it the desired curvature. A backing material is now applied to one surface of the transducer.

FIG. **12** has a top view of the dark field transducer for surface wave insonification having the spherical inner element **35** and conical, annular outer element **36**, and shows scanning the part **15** to inspect it for surface irregularities and cracks. The shape of the crack is determined and crack depth is measured along the crack length; this information is used in making part rejection decisions and for fatigue predictions. As the dark field transducer is scanned, say, in the X direction at a given Y coordinate, a first pulse is received by inner detecting element **35** when the incident surface wave excitation hits the left crack edge, and a second satellite pulse when the surface wave traveling down the crack and then back up strikes that crack edge. The received signal is seen in FIG. **13**. Crack depth is derived from the time delay t between these two pulses. As the transducer is moved to the right, the right hand crack edge is detected and there are two more voltage pulses in the received waveform.

The crack shape is determined by plotting the location of the larger voltage pulse in each set of two pulses. One type of display is illustrated in FIG. **14** where the shape of the crack at the surface is depicted at **26'**. Time delays are plotted vertically and indicated by arrows **45** at various locations along the crack length. The crack depth profile is the envelope of these arrows.

While the invention has been particularly shown and described with reference to several preferred embodiments, it will be understood by those skilled in the art that the foregoing and other changes in form and details may be made without departing from the spirit and scope of the invention.

The invention claimed is:

1. The method of fabricating a dark field ultrasonic transducer having a spherical inner element and a coaxial, annular, conical outer element, comprising:

providing a mold having a cylindrical bore leading to a cone;

placing a metal ball at the bottom of said cone;

filling said bore and a connecting portion of said cone with a filler material;

curing said filler material and removing the resulting tool, which has said ball embedded in a conical surface, form said mold;

selectively removing metal from a thin piezoelectric polymer from coated with a layer of metal to delineate said inner and outer elements, and shaping and curving said thin film with the end of said tool.

2. The method of claim 1 wherein said filler material is epoxy resin and said piezoelectric polymer film is polyvinylidene difluoride.

* * * * *