United States Patent [19]

Matsumoto

[11] **4,384,244**

[45] **May 17, 1983**

[54] **TORQUE CONTROL SYSTEMS OF INDUCTION MOTORS**

[75] Inventor: **Mitsuo Matsumoto,** Kikubunji, Japan

[73] Assignee: **Toshiba Kikai Kabushiki Kaisha,** Tokyo, Japan

[21] Appl. No.: **171,645**

[22] Filed: **Jul. 23, 1980**

[30] **Foreign Application Priority Data**

Jul. 28, 1979 [JP] Japan 54-96379

[51] **Int. Cl.**[3] **H02P 5/40**

[52] **U.S. Cl.** **318/803;** 318/811

[58] **Field of Search** 318/803, 811, 867, 798, 318/812, 810

[56] **References Cited**

U.S. PATENT DOCUMENTS

3,394,297	7/1968	Risberg	318/798
3,983,463	9/1976	Nabae et al.	318/803
4,028,599	6/1977	Zanki et al.	318/803
4,267,499	5/1981	Kurosawa	318/807
4,272,715	6/1981	Matsumoto	318/807

Primary Examiner—David Smith, Jr.

Attorney, Agent, or Firm—Koda and Androlia

[57] **ABSTRACT**

In a torque control system of an induction motor having m phase stator windings and P poles there are provided a torque instructor and a phase n voltage V_{ns} generator responsive to a torque instruction given by the torque instructor to calculate the phase n voltage according to the following equation.

$$V_{ns} = r_s I_o \cos\left(\phi - \frac{2(n-1)}{m}\pi\right) - \left(l_m I_o \frac{d\phi}{dt} + r_s I_2\right) \sin\left(\phi - \frac{2(n-1)}{m}\pi\right)$$

where

$$\phi = \frac{P}{2}\theta + \frac{r_r}{l_r I_o}\int I_2 dt \text{ (radian)},$$

m: number of phases,

n: 1, 2, . . . , m,

P: number of poles,

I_o: constant exciting current (ampere),

r_s, r_r, l_r and l_m: constants inherent to the induction motor,

θ: rotor rotational angle (radian) of the induction motor, and

I_2: instructed rotor current (ampere) proportional to an instructed torque.

7 Claims, 16 Drawing Figures

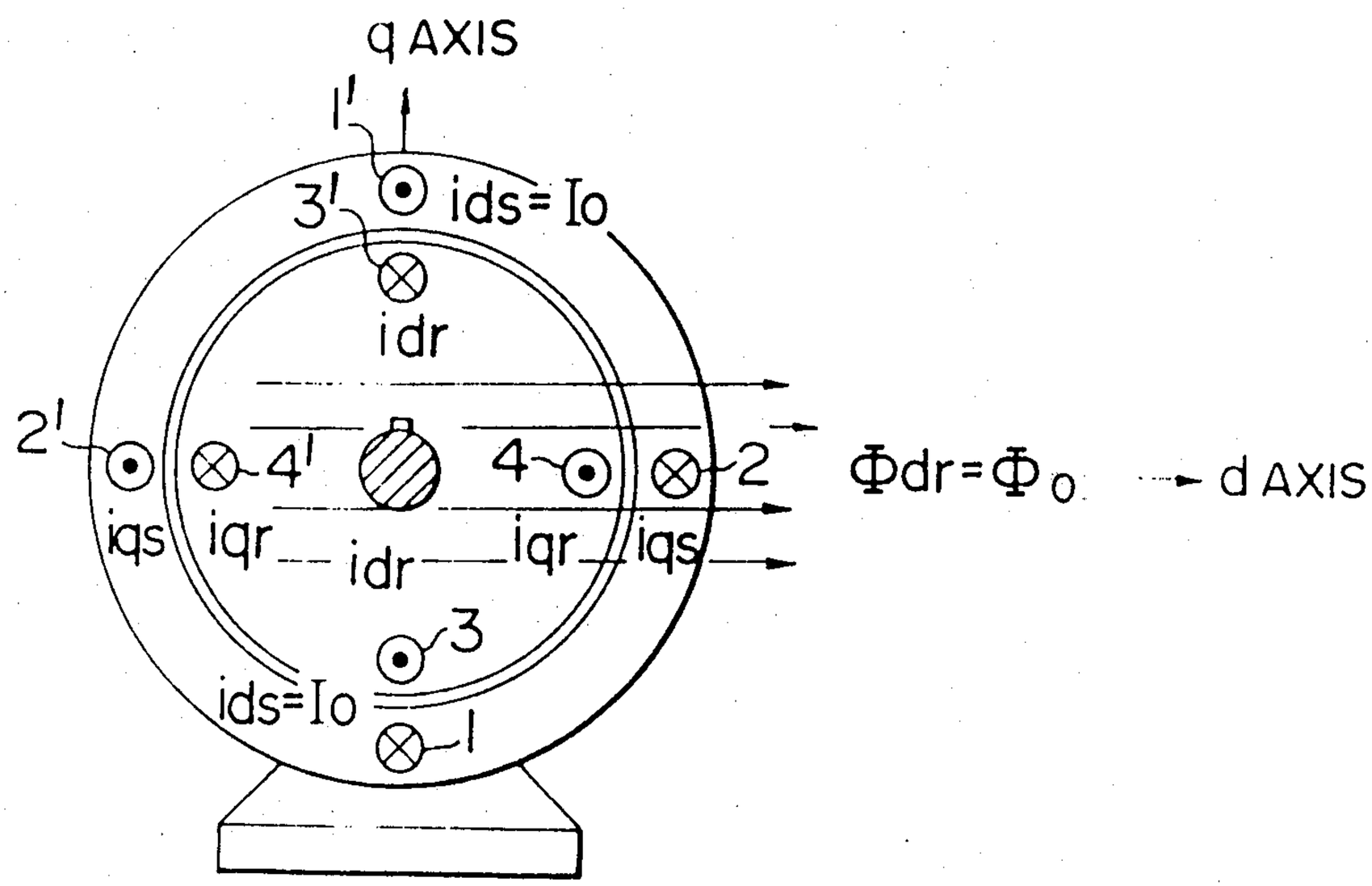

FIG. 1

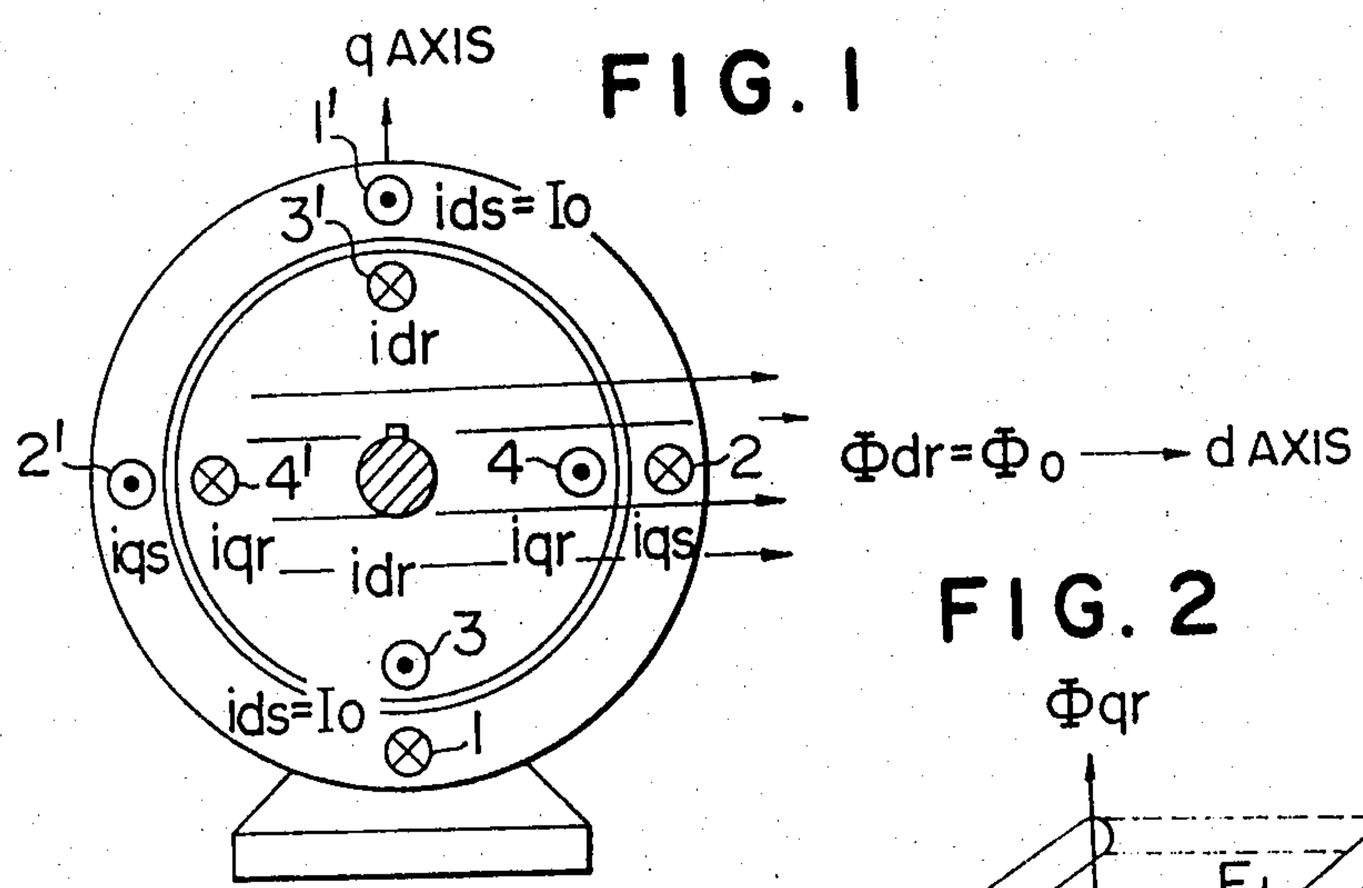

FIG. 2

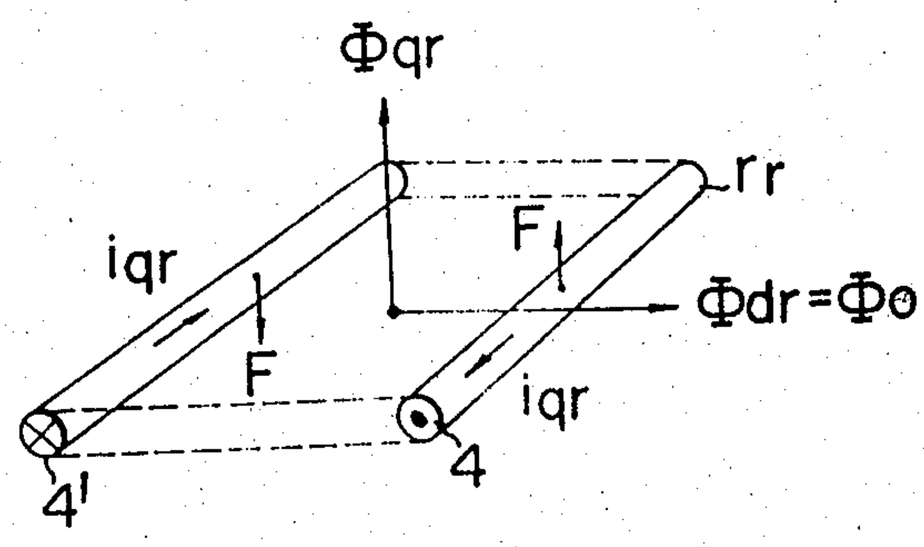

FIG. 3

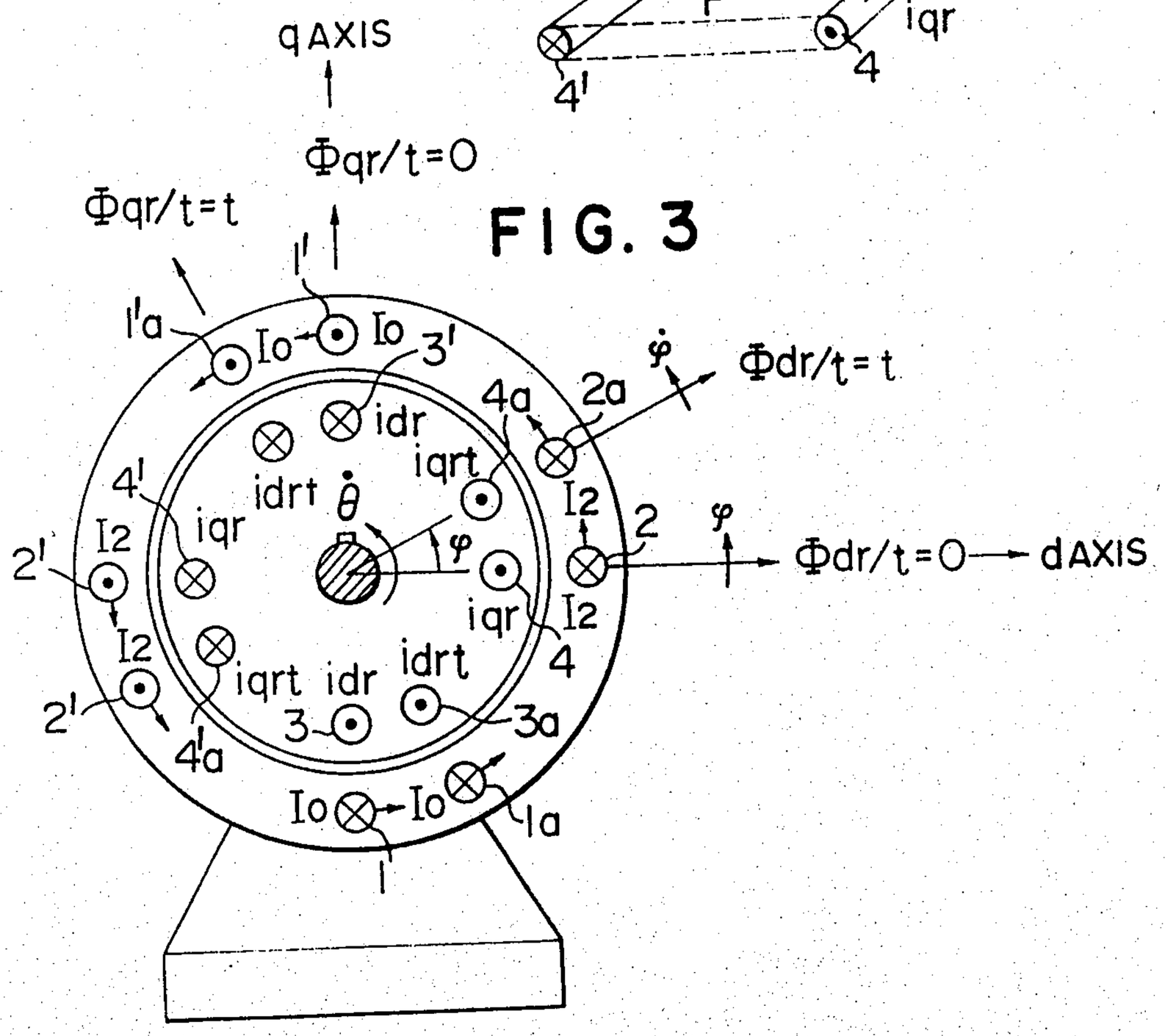

FIG. 4

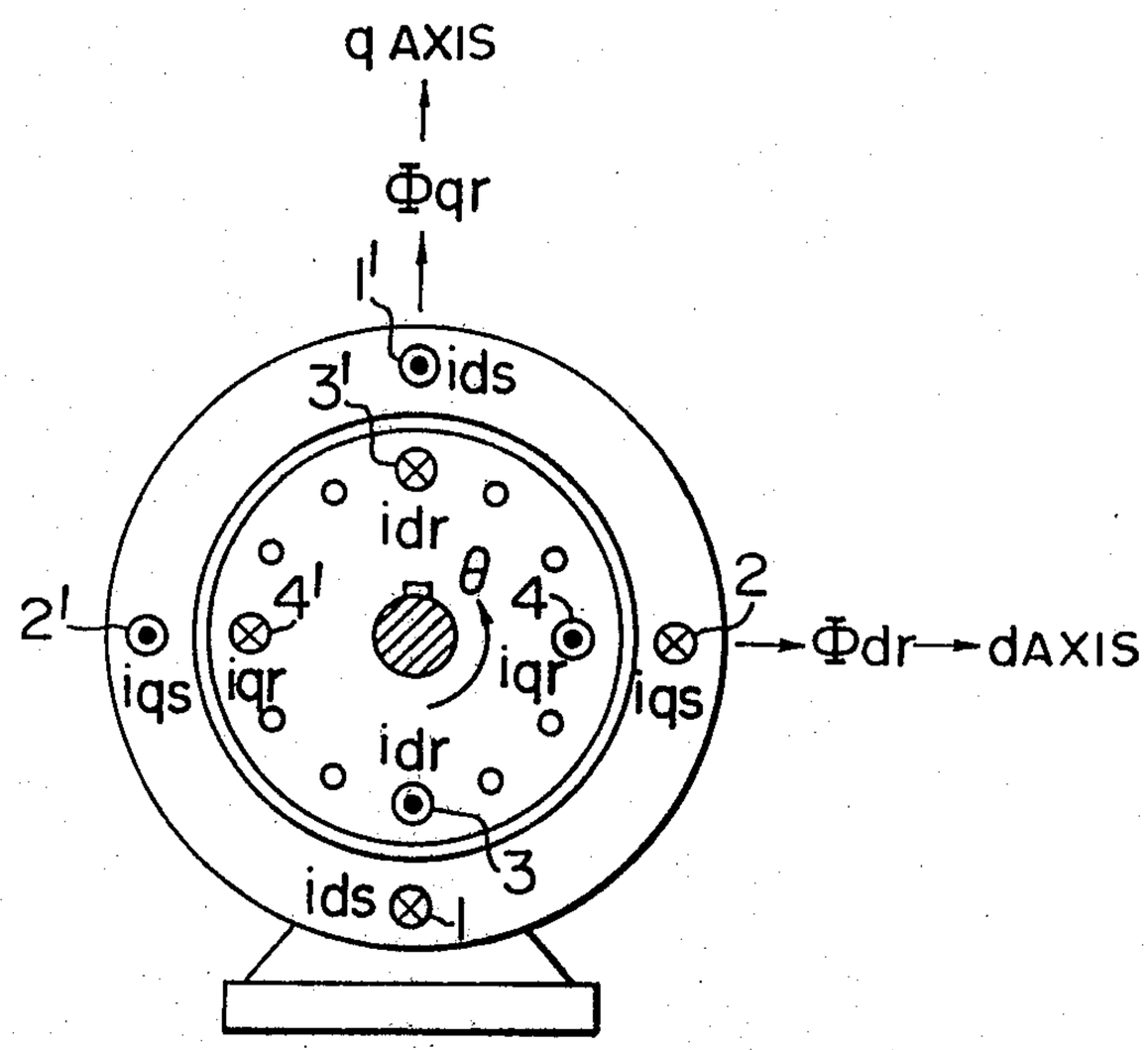
q AXIS
Φqr
1'
ids
3'
idr
θ
2'
4'
4
2
iqs
iqr
iqr
iqs
Φdr
dAXIS
idr
3
ids
1

FIG. 5

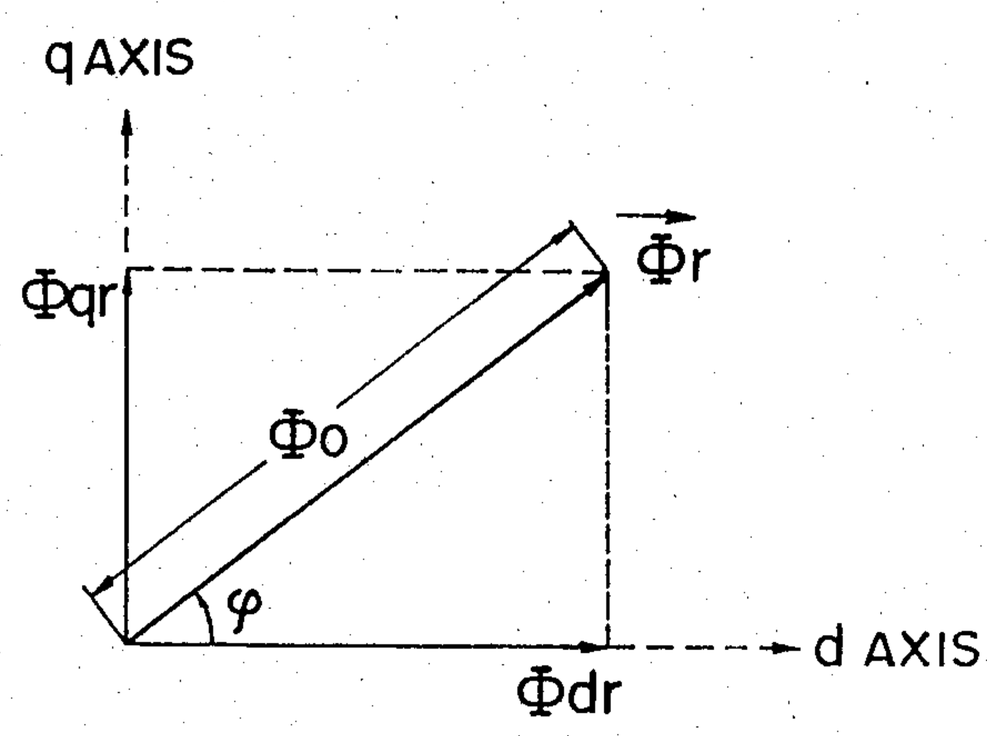
qAXIS
Φr
Φqr
Φo
φ
d AXIS
Φdr

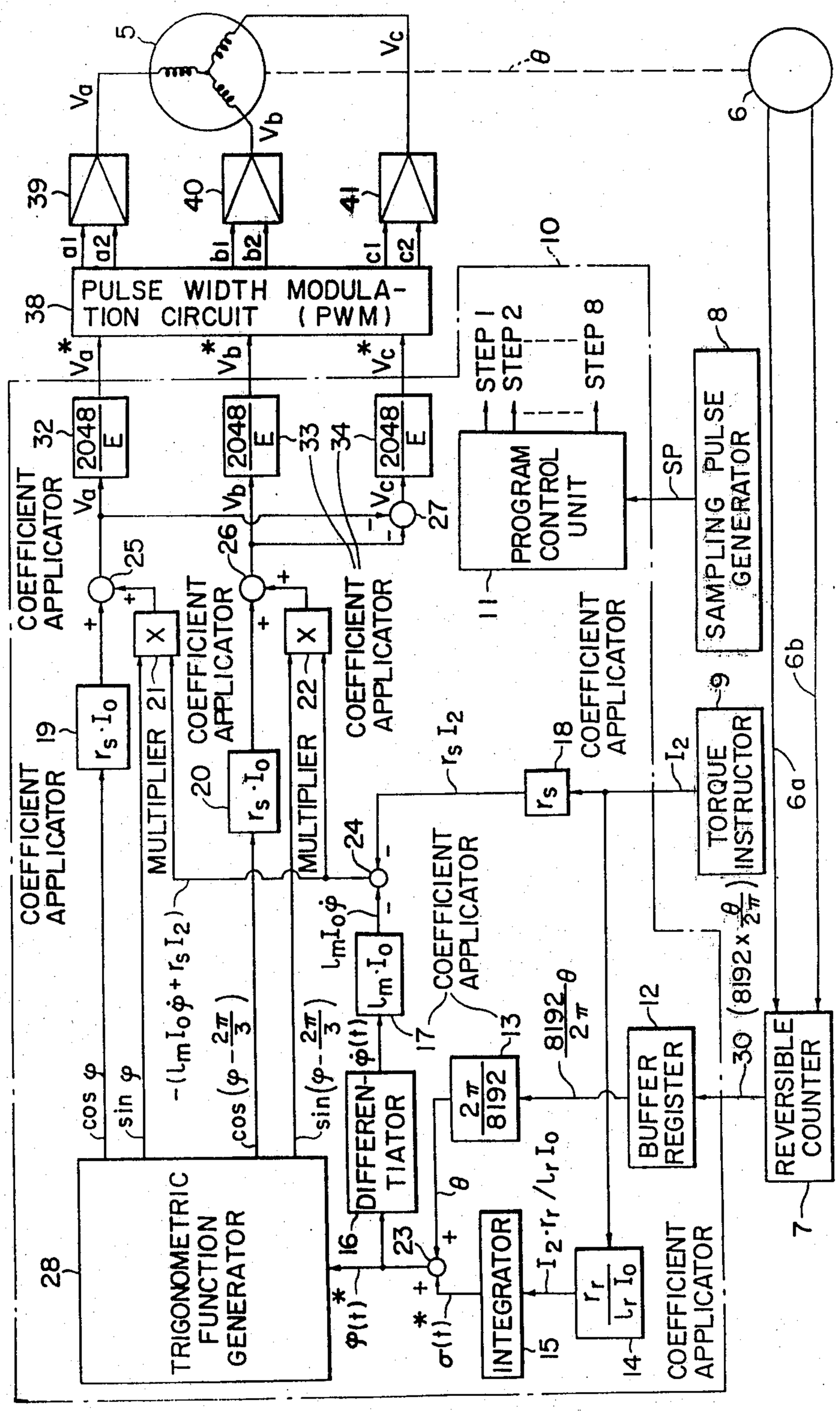
PULSE WIDTH MODULATION CIRCUIT (PWM)
PROGRAM CONTROL UNIT
SAMPLING PULSE GENERATOR
TORQUE INSTRUCTOR
REVERSIBLE COUNTER
BUFFER REGISTER
COEFFICIENT APPLICATOR
MULTIPLIER
DIFFERENTIATOR
INTEGRATOR
TRIGONOMETRIC FUNCTION GENERATOR
STEP 1
STEP 2
STEP 8
2048 E

FIG. 6

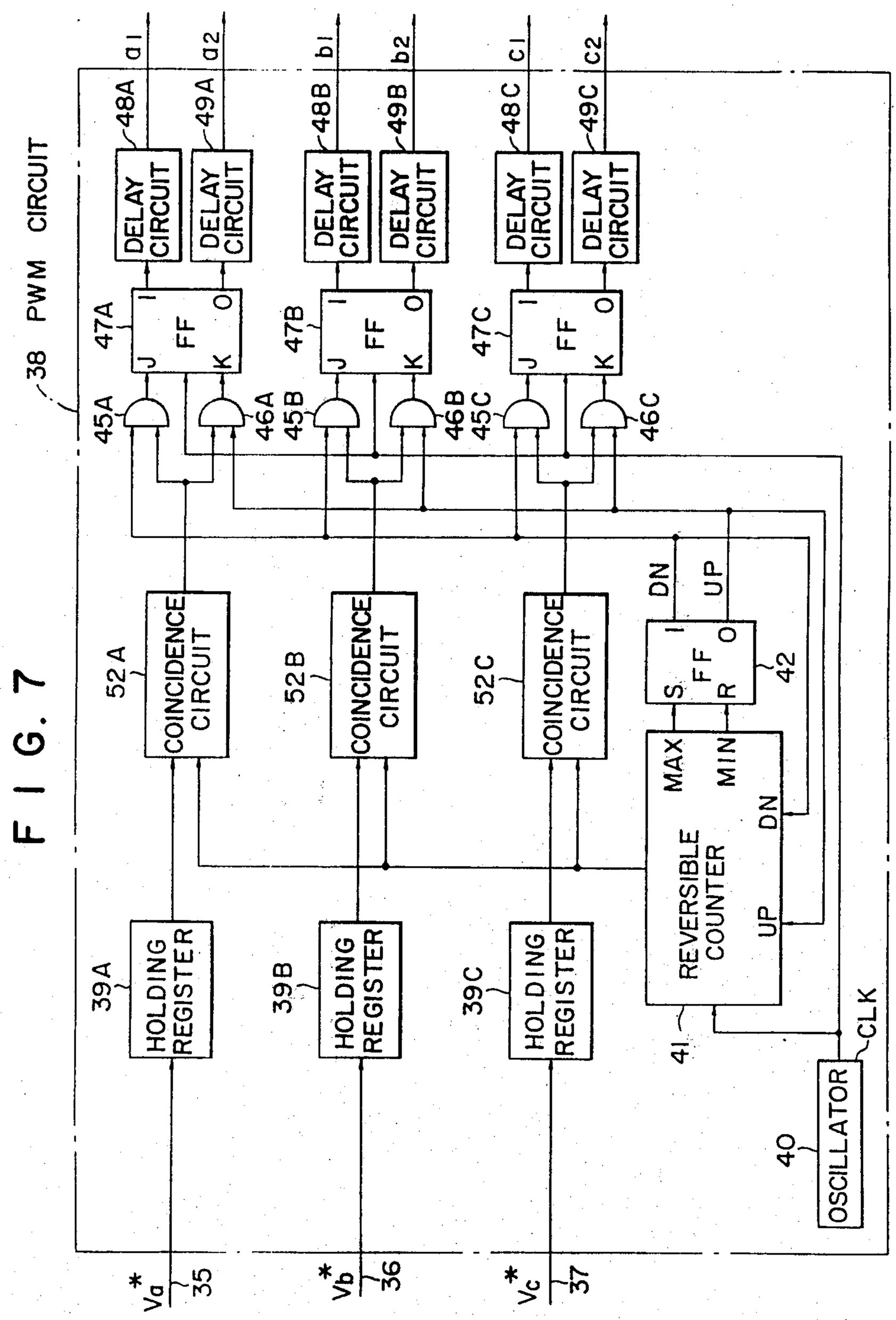
FIG. 7
38 PWM CIRCUIT
a1
a2
b1
b2
c1
c2
48A
49A
48B
49B
48C
49C
DELAY CIRCUIT
47A
47B
47C
FF
45A
46A
45B
46B
45C
46C
52A
52B
52C
COINCIDENCE CIRCUIT
DN
UP
42
MAX
MIN
REVERSIBLE COUNTER
41
39A
39B
39C
HOLDING REGISTER
CLK
40
OSCILLATOR
*Va
35
*Vb
36
*Vc
37

FIG. 8

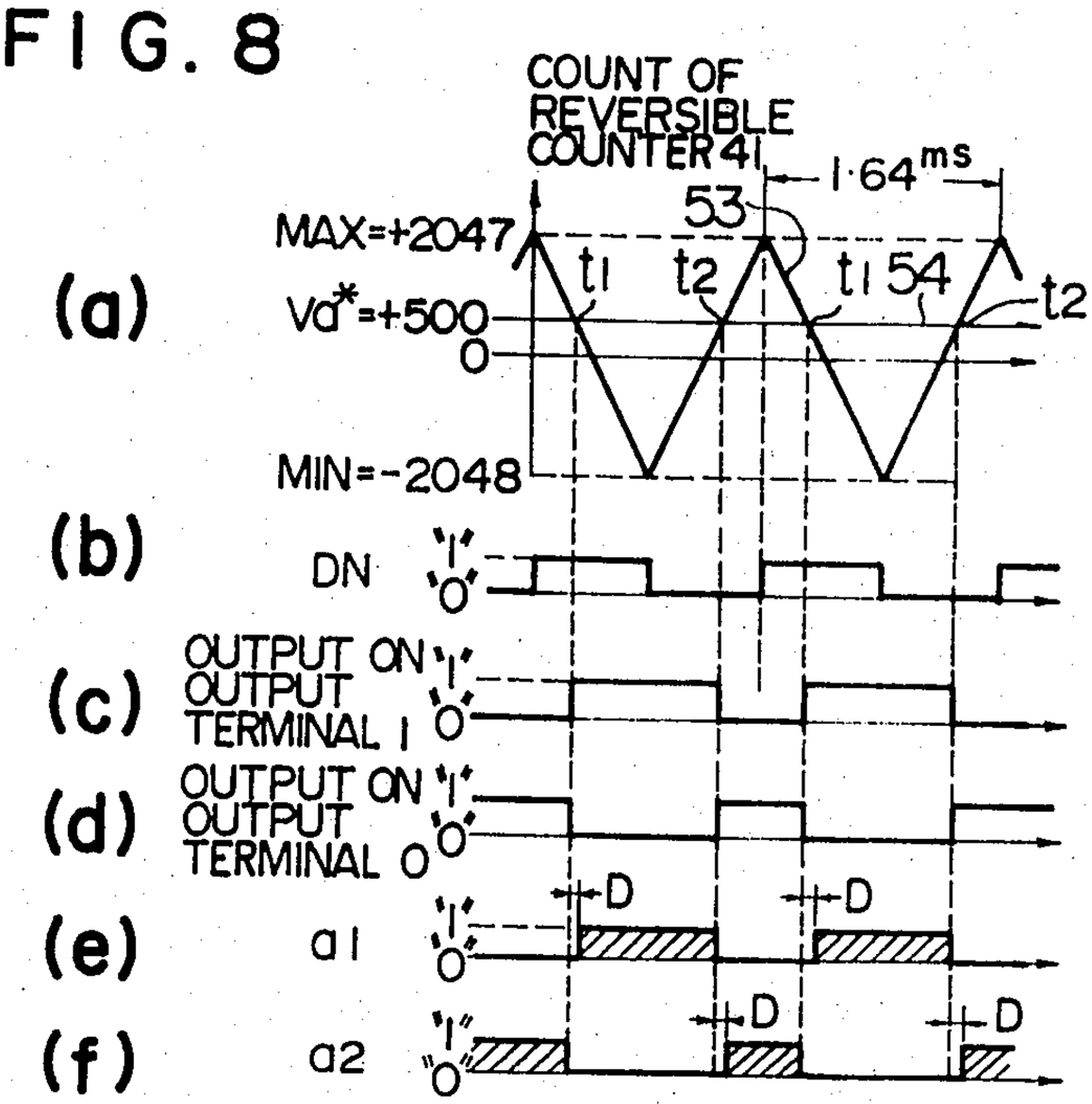
COUNT OF REVERSIBLE COUNTER 41
1·64ms
53
MAX=+2047
t1
t2
t1 54
t2
(a)
Va*=+500
0
MIN=-2048
(b)
DN
"1"
"0"
(c)
OUTPUT ON OUTPUT TERMINAL 1
(d)
OUTPUT ON OUTPUT TERMINAL 0
(e)
a1
D
(f)
a2

FIG. 9

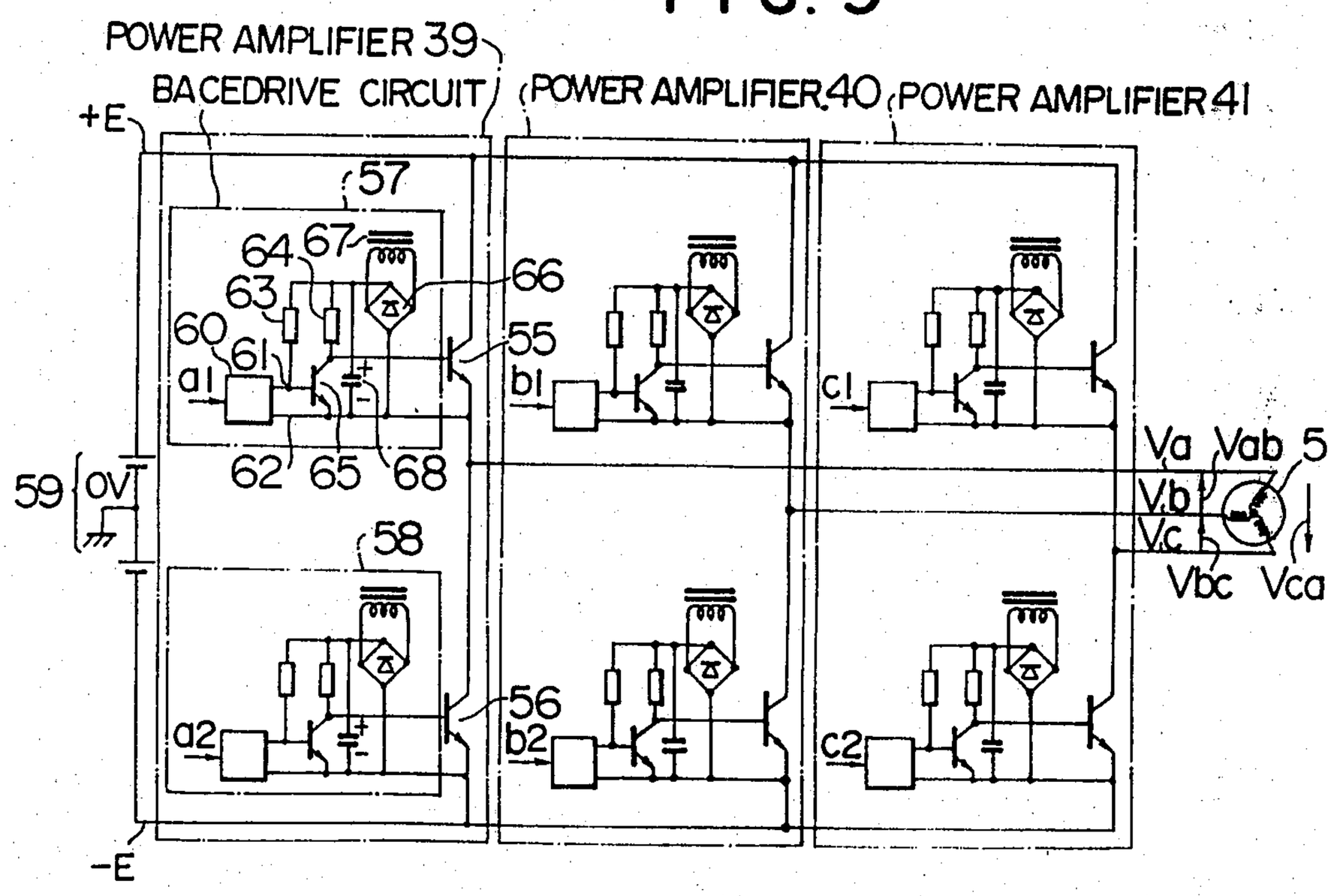
POWER AMPLIFIER 39
BACEDRIVE CIRCUIT
POWER AMPLIFIER 40
POWER AMPLIFIER 41
+E
57
64
67
66
63
60
61
55
a1
b1
c1
62
65
68
59
0V
58
56
a2
b2
c2
Va
Vab
5
Vb
Vc
Vbc
Vca
-E

FIG. 10

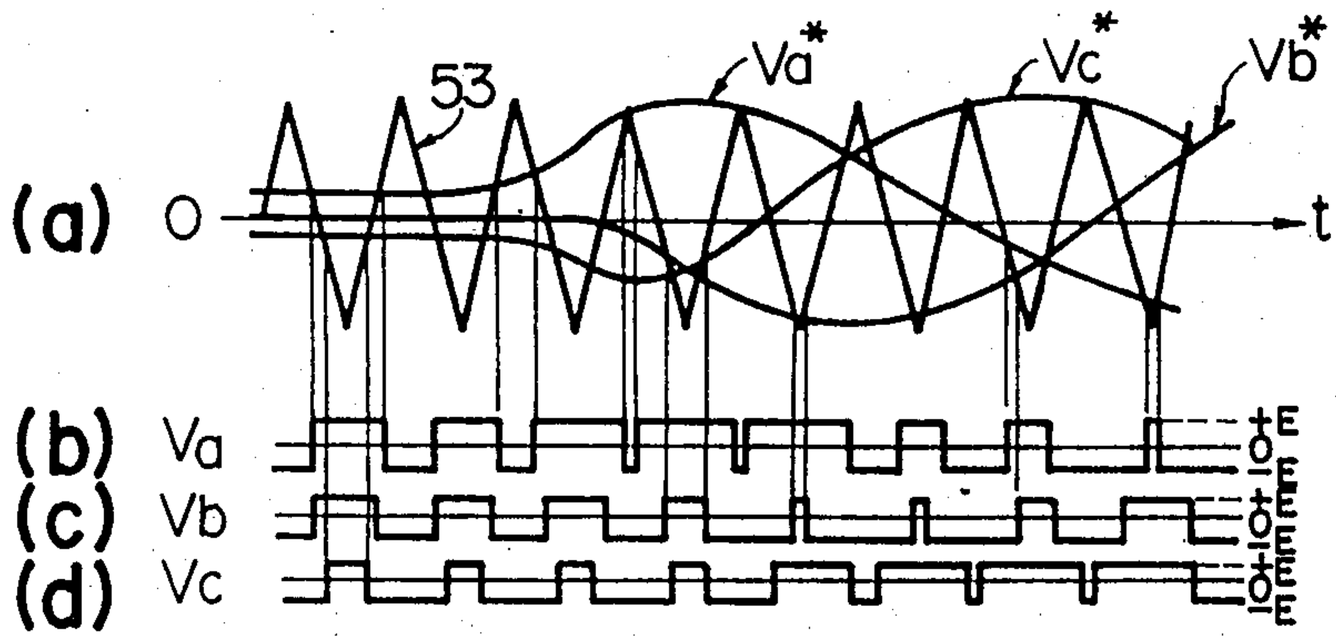

FIG. 11

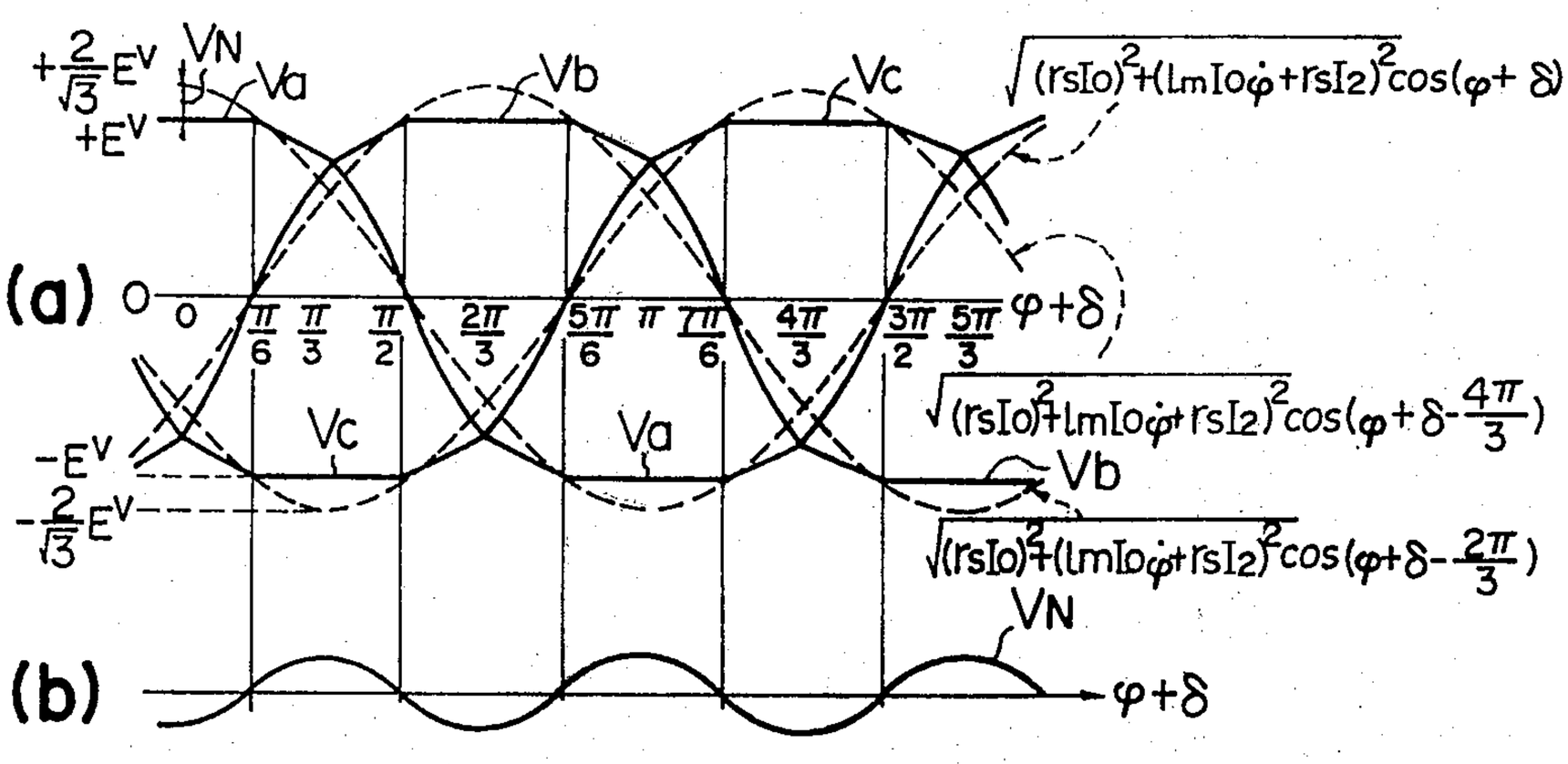

FIG. 13

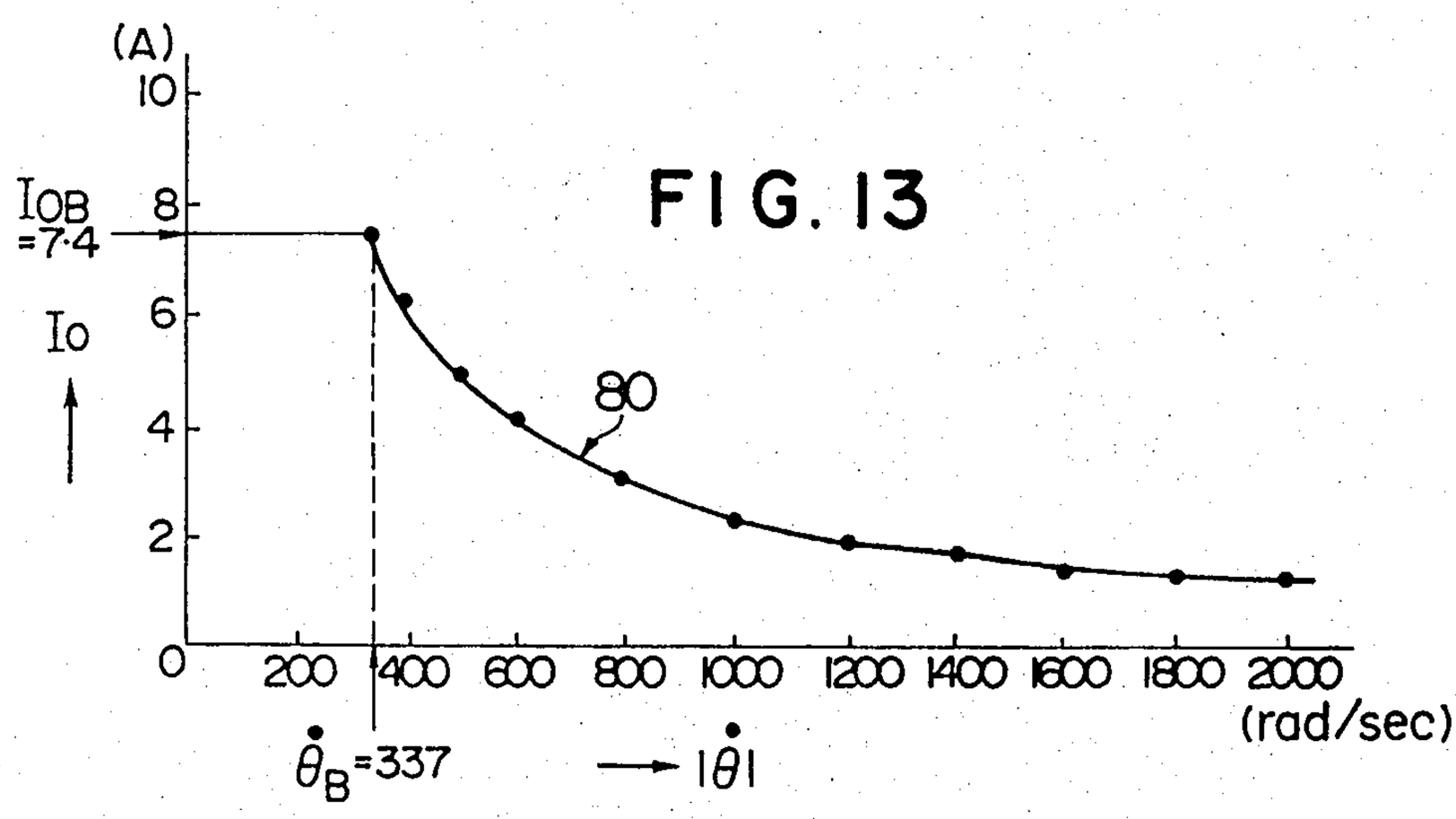

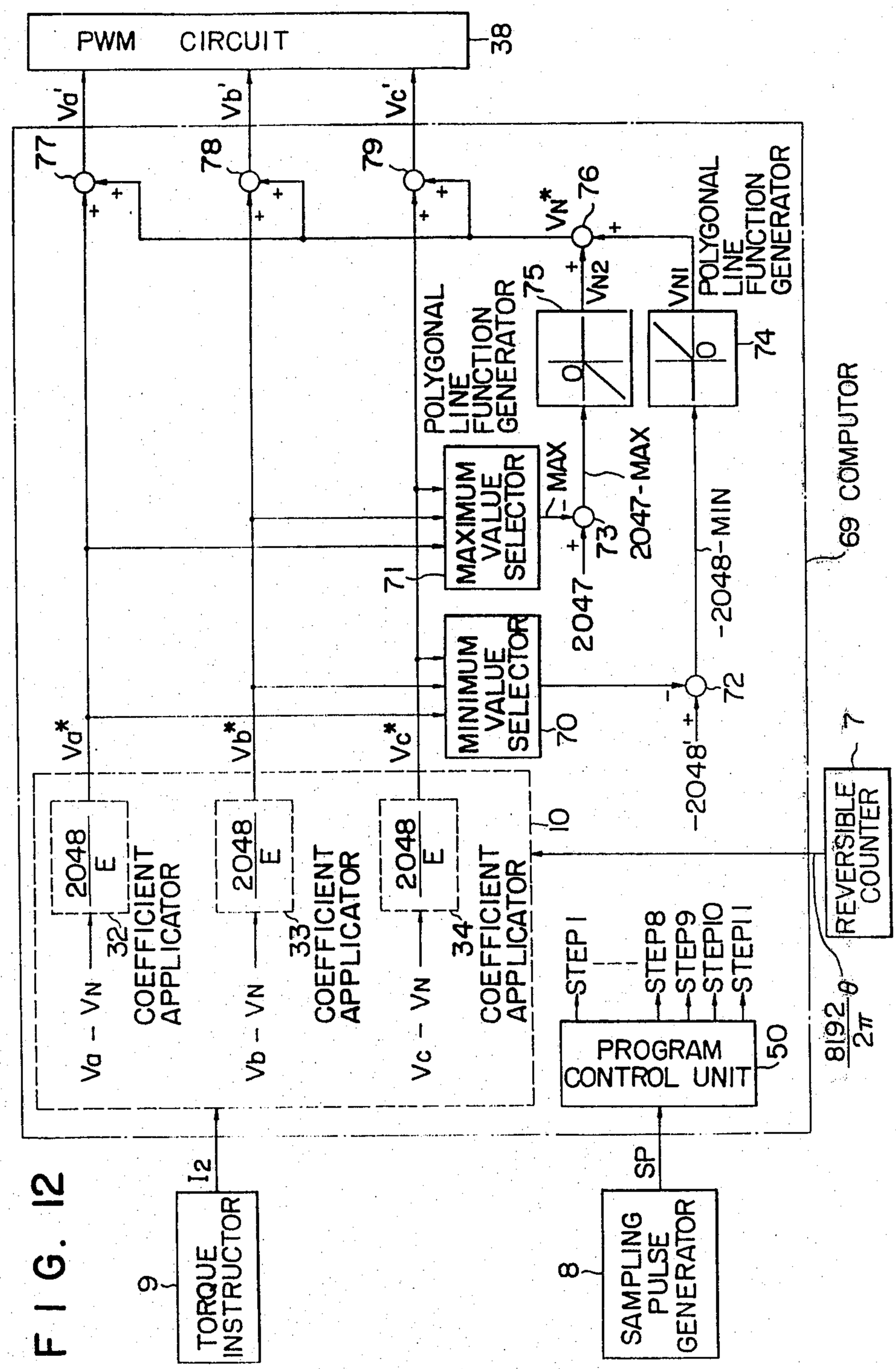
PWM CIRCUIT
38
Va'
Vb'
Vc'
77
78
79
VN*
76
POLYGONAL LINE FUNCTION GENERATOR
75
VN2
VN1
POLYGONAL LINE FUNCTION GENERATOR
74
MAXIMUM VALUE SELECTOR
71
MAX
2047-MAX
73
2047
MINIMUM VALUE SELECTOR
70
-2048-MIN
72
-2048'
69 COMPUTOR
Va*
Vb*
Vc*
2048/E
32
COEFFICIENT APPLICATOR
33
34
10
Va - VN
Vb - VN
Vc - VN
REVERSIBLE COUNTER
7
8192/2π θ
STEP 1
STEP8
STEP9
STEP10
STEP11
PROGRAM CONTROL UNIT
50
I2
SP
TORQUE INSTRUCTOR
9
SAMPLING PULSE GENERATOR
8

FIG. 12

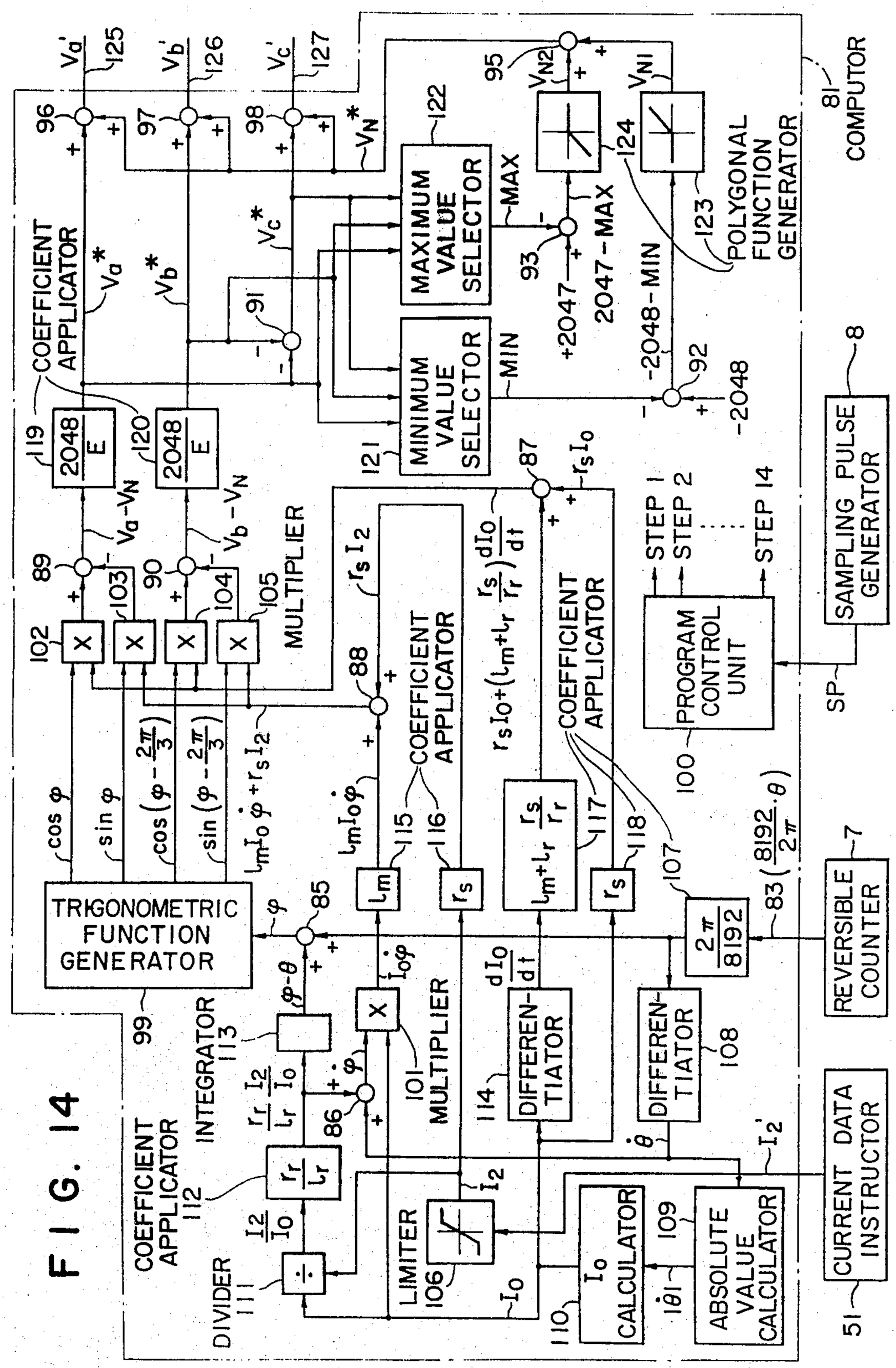
COEFFICIENT APPLICATOR
MAXIMUM VALUE SELECTOR
MINIMUM VALUE SELECTOR
POLYGONAL FUNCTION GENERATOR
COMPUTOR
MULTIPLIER
COEFFICIENT APPLICATOR
PROGRAM CONTROL UNIT
SAMPLING PULSE GENERATOR
TRIGONOMETRIC FUNCTION GENERATOR
REVERSIBLE COUNTER
INTEGRATOR
MULTIPLIER
DIFFERENTIATOR
DIFFERENTIATOR
COEFFICIENT APPLICATOR
DIVIDER
LIMITER
I_o CALCULATOR
ABSOLUTE VALUE CALCULATOR
CURRENT DATA INSTRUCTOR
STEP 1
STEP 2
STEP 14
MAX
MIN
2047-MAX
2047
-2048-MIN
-2048
SP

FIG. 14

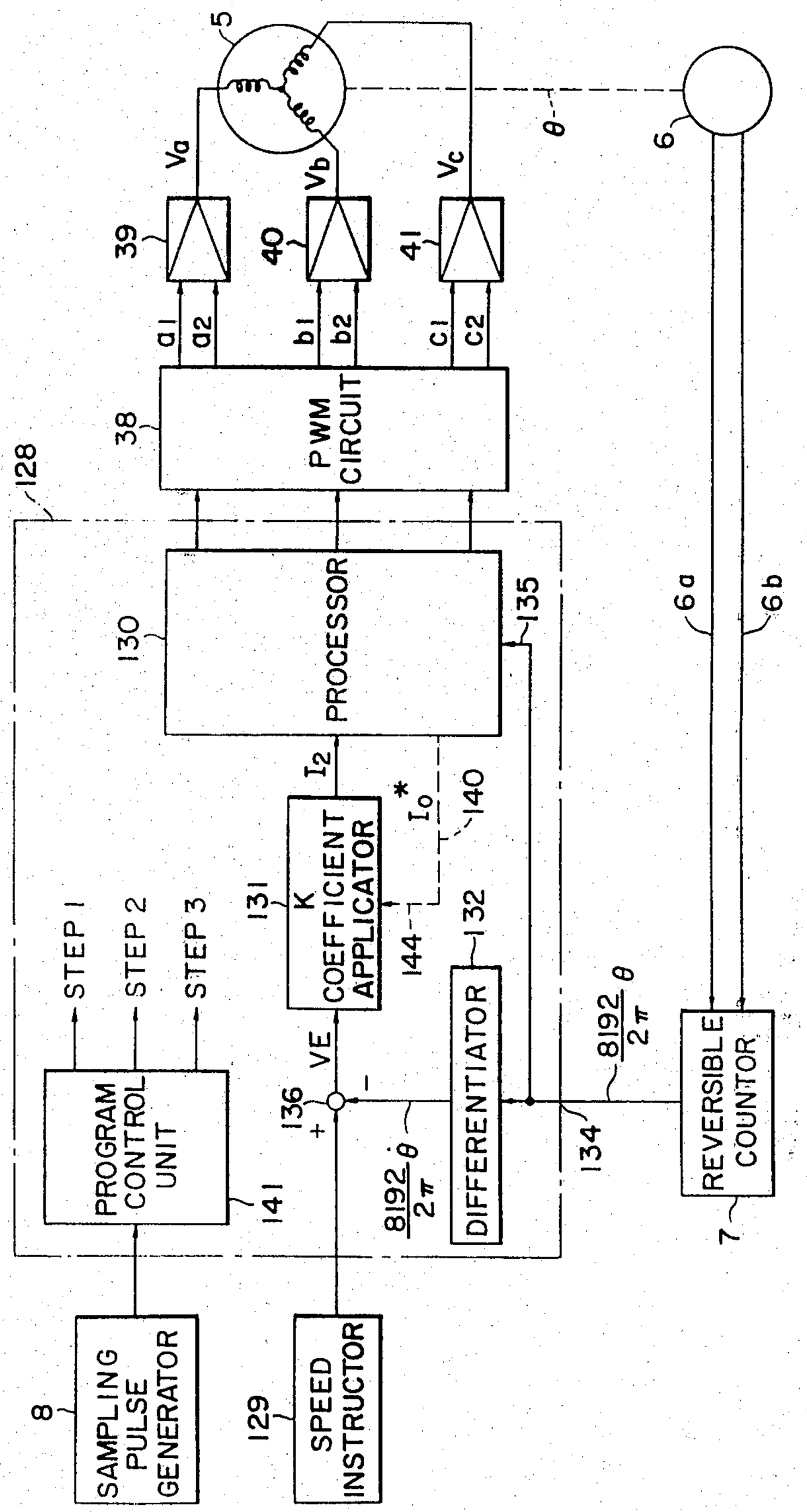
5
Va
Vb
Vc
θ
6
39
40
41
a1
a2
b1
b2
c1
c2
38
PWM CIRCUIT
128
130
PROCESSOR
135
6a
6b
I2
Io*
140
131
K COEFFICIENT APPLICATOR
144
132
STEP 1
STEP 2
STEP 3
VE
136
DIFFERENTIATOR
8192/2π θ
134
REVERSIBLE COUNTOR
7
PROGRAM CONTROL UNIT
141
8192/2π θ̇
8
SAMPLING PULSE GENERATOR
129
SPEED INSTRUCTOR

FIG. 15

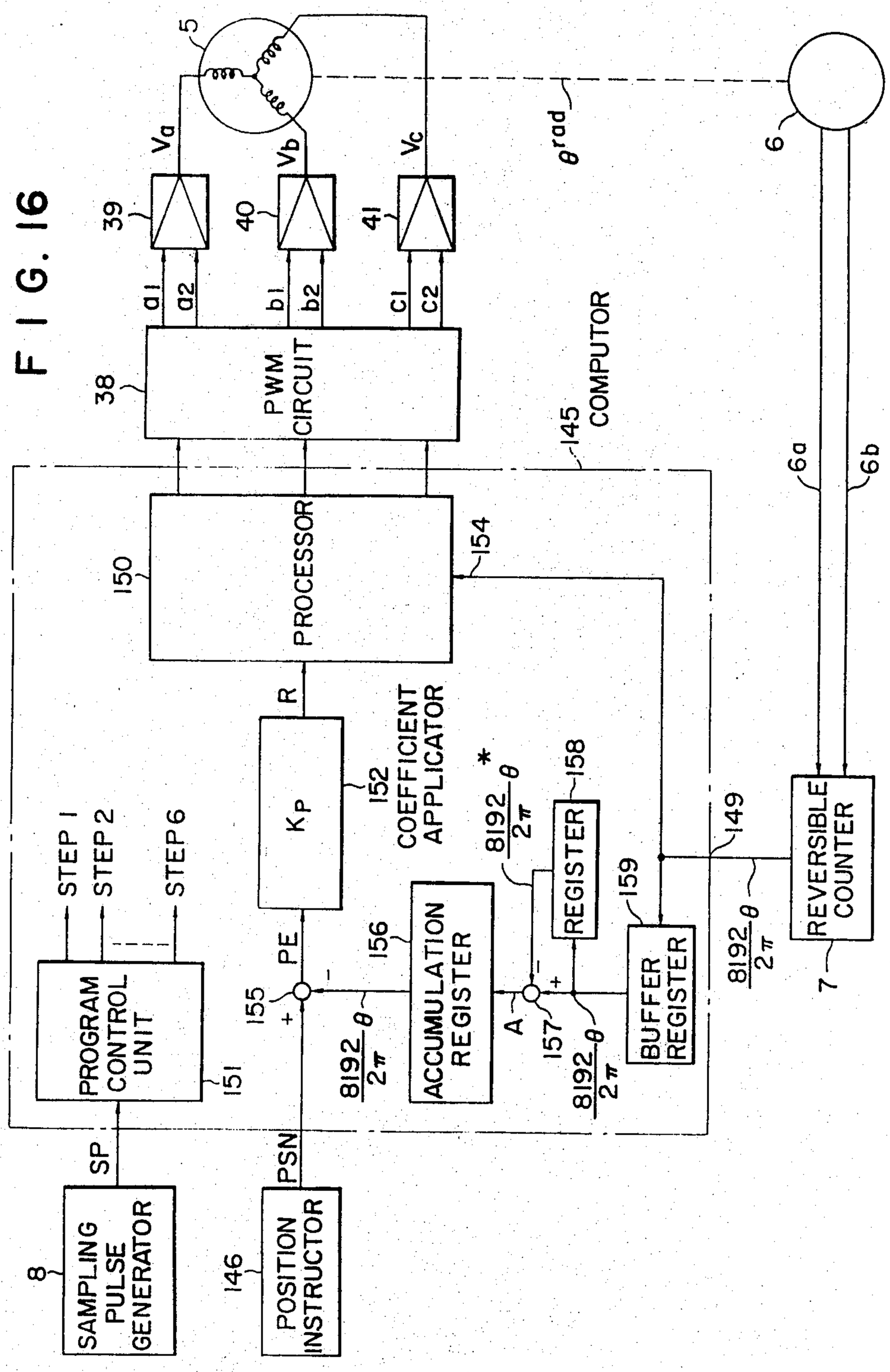
FIG. 16
5
Va
Vb
Vc
39
40
41
a1
a2
b1
b2
c1
c2
38
PWM CIRCUIT
θrad
6
145
COMPUTOR
6a
6b
150
PROCESSOR
154
R
Kp
152
COEFFICIENT APPLICATOR
8192/2π θ *
158
REGISTER
159
BUFFER REGISTER
149
8192/2π θ
REVERSIBLE COUNTER
7
STEP 1
STEP 2
STEP 6
PROGRAM CONTROL UNIT
151
PE
155
156
ACCUMULATION REGISTER
8192/2π θ
A
157
8192/2π θ
SP
PSN
8
SAMPLING PULSE GENERATOR
146
POSITION INSTRUCTOR

TORQUE CONTROL SYSTEMS OF INDUCTION MOTORS

BACKGROUND OF THE INVENTION

This invention relates to a torque control system of an induction motor.

In most cases, DC shunt motors have been used in such field requiring quick response characteristics as position control apparatus and speed control apparatus. Because a quick response control system can be realized since the output torque is proportional to the armature current and since flow of the armature current immediately produces the output torque, and because a control system intended by a designer can readily be realized with a simple linear automatic control theory.

Where induction motors abundantly used as constant speed motors can be used in these control systems there arises many advantages over direct current motors. For example, as no brush is used not only maintenance is easy but also electric spark, electric noise and mechanical fault can be avoided. Further, as no commutator is used problems of commutation do not occur so that large current high speed operation is possible. Moreover, induction motors can be manufactured to be dust proof and explosion proof with small and low cost.

Among the prior art induction motor control systems is included so-called V/f constant control system in which the primary voltage and the primary frequency of the motor are made proportional to the number of rotations. With this control system, however, it is difficult to immediately produce an instructed torque thus failing to realize a quick response control system, and to produce torque according to linear automatic linear control theory.

SUMMARY OF THE INVENTION

Accordingly, it is the principal object of this invention to provide an improved control system of an induction motor which can immediately generate an output torque precisely proportional to an instructed value according to a linear automatic control theory similar to that of a DC motor.

Another object of this invention is to provide an improved system for controlling torque, speed and a rotor angular position of an induction motor according to a linear automatic control theory.

According to this invention there is provided a torque control system of an induction motor having m phase windings and P poles, comprising means for producing a predetermined torque instruction, and means responsive to the torque instruction for generating and applying a phase n voltage V_{ns} expressed by the following equation to the stator windings of the induction motor to cause it to produce a torque corresponding to the torque instruction.

$$V_{ns} = r_s I_o \cos\left(\phi - \frac{2(n-1)}{m}\pi\right) - \left(l_m I_o \frac{d\phi}{dt} + r_s I_2\right) \sin\left(\phi - \frac{2(n-1)}{m}\pi\right)$$

where

$$\phi = \frac{P}{2}\theta + \frac{r_r}{l_r I_o}\int I_2 dt \text{ (radian)},$$

m: number of phases equal to 2 or more,

n: 1, 2, . . . m,

P: number of poles of the induction motor,

I_o: constant exciting current of the stator windings (ampere),

r_s, r_r, l_r and l_m: constants inherent to the induction motor,

θ: rotor rotating angle (radian) of the induction motor, and

I_2: instructed rotor current (ampere) corresponding to the torque instruction.

According to modified embodiments there are provided a device for controlling the phase n voltage to be equal to a permissible maximum value and a device for producing a permissible maximum voltage which makes equals the voltage V_{ns} to be equal to the permissible maximum voltage.

BRIEF DESCRIPTION OF THE DRAWINGS

In the accompanying drawings:

FIG. **1** is a diagrammatic cross-sectional view of a two phase two pole induction motor to which the present invention is applicable;

FIG. **2** is a diagram useful to explain the operation of the motor shown in FIG. **1**;

FIG. **3** is a diagrammatic cross-sectional view of a two phase two pole induction motor corresponding to FIG. **1**;

FIG. **4** is a diagrammatic cross-sectional view useful to explain the principle of this invention in accordance with FIG. **1**;

FIG. **5** is a vector diagram useful to explain the principle of operation of this invention;

FIG. **6** is a block diagram showing a first embodiment of this invention;

FIG. **7** is a connection diagram showing the detail of the pulse width modulation (PWM) circuit **38** shown in FIG. **6**;

FIGS. **8***a* through **8***f* are time charts showing one example of operation of the circuit shown in FIG. **7**;

FIG. **9** is a connection diagram showing the detail of the power amplifiers **39–41** shown in FIG. **6**;

FIGS. **10***a*–**10***d* and FIGS. **11***a* and **11***b* are waveforms useful to explain the operation of the power amplifiers;

FIG. **12** is a block diagram showing a second embodiment of this invention;

FIG. **13** shows a characteristic curve for explaining the operation of the second embodiment;

FIG. **14** is a block diagram showing a third embodiment of this invention;

FIG. **15** is a block diagram showing a fourth embodiment of this invention; and

FIG. **16** is a block diagram showing a fifth embodiment of this invention.

DESCRIPTION OF THE PREFERRED EMBODIMENTS

To have better understanding of this invention the principle of a torque control of an induction motor according to this invention will firstly be described.

For simplifying the description, a two phase two pole induction motor will be described. FIG. **1** shows a

cross-sectional view of a squirrel cage two phase two pole induction motor. The motor is represented by a q axis and a d axis of rectangular coordinates and cross-sections of one stator winding **1-1'** and the other stator winding **2-2'** orthogonal thereto are shown. When a constant exciting current $i_{ds}=I_o$ is passed through the winding **1-1'**, the magnetic flux Φ_{dr} induced in the rotor along d axis has a constant value Φ_o. In order to cause the motor to produce a constant torque under this condition when the current i_{qs} flowing through the stator winding **2-2'** is varied from zero to a constant value I_2, the flux Φ_{qr} in the direction of q axis in the rotor shown in FIG. 2 varies thereby inducing voltage in the rotor winding **4-4'**. This induced voltage passes current i_{qr} through rotor winding **4-4'** short circuited by a rotor winding resistance r_r. At this time, since the flux Φ_{qr} does not link the rotor winding **3-3'** no voltage would be induced in the winding **3-3'**, and current i_{dr} becomes zero so that flux Φ_{dr} maintains a value Φ_o.

Assume now that the rotor is not rotating the following equations hold.

$$\Phi_{qr}=l_m i_{qs}-l_r i_{qr} \tag{1}$$

$$d\Phi_{qr}/dt=r_r i_{qr} \tag{2}$$

where l_m represents the mutual inductance H betwen the stator and rotor windings, and l_r the self inductance of the rotor winding.

From equations (1) and (2) we can obtain the following equation.

$$l_r\frac{di_{qr}}{dt}+r_r i_{qr}=l_m\frac{di_{qs}}{dt} \tag{3}$$

When the current i_{qs} varies from zero to I_2 at a time t=0 the current i_{qr} is shown by the following equation derived from equation (3).

$$i_{qr}=\frac{l_m}{l_r}I_2 e^{-\frac{r_r}{l_r}\cdot t} \tag{4}$$

Thus, at t=0 current $i_{qr}t=0=(l_m/l_r)I_2$ flows through the winding **4-4'**, and the flux Φ_o orthogonal to the winding **4-4'** produces a force $F=K_F\Phi_o(l_m/l_r)I_2$ in the direction of rotation shown in FIG. 2, where K_F represents a constant coefficient.

Under this condition the current i_{qr} decreases with time according to equation (4). Where it is desired to maintain the force F at a constant value $F=K_F\Phi_o(l_m/l_r)I_2$, that is to maintain the torque at a constant value it is necessary to always maintain the current i_{qr} at a constant value of $i_{qr}=(l_m/l_r)I_2$. In other words, it is necessary to maintain the flux Φ_o orthogonal to current i_{qr}.

To hold the equation $i_{qr}=(l_m/l_r)I_2$, the stator windings **1-1'** and **2-2'** are rotated at a constant speed $\dot{\phi}$ (rad./sec) starting from a time t=0 while maintaining equal the currents I_o and I_2 flowing through the stator windings **1-1'** and **2-2'**. (Actually, the stator windings **1-1'** and **2-2'** are not rotated, but for the purpose of description, it is assumed herein that they are rotated). At time t these windings are rotated by an angle ϕ to the positions **1a-1a'** and **2a-2a'**. At t=0, flux $\Phi_{dr}/t=0$ having a magnitude Φ_o crosses the rotor winding **4-4'** at the constant speed $\dot{\phi}$ to induce voltage $\dot{\phi}\Phi_o$ therein. This induced voltage $\dot{\phi}\Phi_o$ passes current $i_{qr}\dot{\phi}\Phi_o/r_r$ through the winding **4-4'**.

The speed $\dot{\phi}$ which satisfies the following equation (5) is determined so that current i_{qr} becomes equal to $(l_m/l_r)\cdot I_2$.

$$\frac{\dot{\phi}\Phi_o}{r_r}=\frac{l_m}{l_r}I_2 \tag{5}$$

$$\dot{\phi}=\frac{l_m}{l_r}\frac{r_r}{\Phi_o}I_2$$

At time t=0 since $i_{qr}=(l_m/l_r)I_2$ and the current i_{qs} flowing through the stator winding **2-2'** is equal to I_2, from equation (1) $\Phi_{qr}/t=0$ so that no voltage is induced in the rotor winding **3-3'** and $i_{dr}=0$ with the result that the magnitude of the flux $\phi_{dr}/t=0$ remains at ϕ_o.

Consider now that the stator windings are rotated at a speed ϕ starting from t=0 to reach positions **1a-1a'** and **2a-2a'** shown in FIG. 3 at time t, the constant exciting current I_o flowing through the stator winding **1a-1a'** induces a flux vector $\Phi_{dr}/t=t$ in the direction of the winding **2a-2a'** and having a magnitude Φ_o and an angle ϕ as shown in FIG. 3. As this flux crosses the rotor winding **4a-4a'** in the plane of the winding **2a-2a'** at a speed $\dot{\phi}$ voltage $\dot{\phi}\Phi_o$ is induced in the rotor winding, typically **4a-4a'**. Although this flux $\Phi_{dr}/t=t$ induces voltages in windings **3-3'**, **4-4'** and other squirrel cage rotor windings the direction of a resultant vector of these voltages lies in the direction of winding **4a-4a'**, so that it can be considered that the voltage is induced only in the rotor winding **4a-4a'** and not in other rotor windings. Due to this induced voltage current $i_{qrt}=\dot{\phi}\Phi_o/r_r$ flows through the rotor winding **4a-4a'**. It can be noted that this current i_{qrt} is equal to $(l_m/l_r)I_2$ from equation (5) and in this case too the flux $\Phi_{dr}/t=t$ linking the winding **4a-4a'** produces a force $F=K_F\Phi_o(l_m/l_r)I_2$. At this time, the current I_2 flowing through the stator winding **2a-2a'** and the current i_{qrt} flowing through the rotor winding **4a-4a'** have the same magnitude ($i_{qrt}=(l_m/l_r)I_2\approx I_2$, whereas in an ordinary induction motor $l_m\approx l_r$) and l_m and l_r have opposite directions, so that the rotor current i_{drt} of the rotor winding **3a-3a'** in the same plane as the stator winding **1a-1a'** becomes zero while the flux $\Phi_{dr}/t=t$ still maintains its magnitude Φ_o.

Since above described relations hold at any time t the output torque T_e of the motor is held always constant as given by the following equation.

$$T_e=K_T\Phi_o\frac{l_m}{l_r}I_2 \tag{6}$$

where K_T represents a constant.

As can be noted from the foregoing description, the current I_o creates flux $\Phi_{dr}/t=t$, and the rotor current i_{qrt} on the axis $\Phi_{dr}/t=t$ has the same magnitude as the current I_2 flowing through the stator winding **2a-2a'** but opposite direction. This is equivalent to the fact that current I_o corresponds to the exciting current of a DC motor and current I_2 to the armature current thereof. Thus, an induction motor can produce a torque just in the same manner as in a DC motor.

Although the above description relates to a case wherein the rotor is not rotating (number of rotations of the rotor $\dot{\theta}=0$), when the rotor is rotating at a speed $\dot{\theta}$ (rad/sec) the same consideration as shown in FIG. 3 may be made when one considers that the d axis and the q axis are fixed with respect to the rotor. In this case, the

value of $\dot{\phi}$ in equation (5) can be expressed by rectangular coordinates with axes d and q fixed relative to the rotor. With a static rectangular coordinates (on the stator), since

$$\dot{\phi}(\text{on stator})=\dot{\phi}(\text{on rotor})+\dot{\theta}(\text{on stator})$$

the stator windings **1-1'** and **2-2'** should be rotated at a speed given by the following equation.

$$\phi\ (\text{on stator}) = \theta\ (\text{on stator}) + \frac{l_m r_r}{l_r \Phi_o} I_2 \tag{7}$$

Although in the foregoing description, it was assumed that $\dot{\theta}$ and I_2 are constant, it can be noted thta these values are not required to be always constant. Thus, the output torque T_e of the induction motor is given by equation (6) so long as equation (7) holds regardless of the manner of varying $\dot{\theta}$ and I_2 with time. Although in the foregoing description it was assumed that the stator windings **1-1'** and **2-2'** shown in FIG. **3** rotate, in an actual induction motor these windings are held stationary in the positions shown in FIG. **1**. Where it is necessary to position the stationary windings at the positions of the windings **1a-1a'** and **2a-2a'** shown in FIG. **3** the currents I_0 and I_2 flowing through these windings are decomposed into a d axis component $i_{ds}=I_o \cos\phi - I_2 \sin\phi$ and a q axis component $i_{qs}=I_o \sin\phi + I_2 \cos\phi$ and these component currents are passed through the stator windings **1-1'** and **2-2'**. Thus, it is necessary to make currents i_{ds} and i_{qs} as follows.

$$\left.\begin{aligned} i_{ds} &= I_o\cos\phi - I_2\sin\phi \\ i_{qs} &= I_o\sin\phi + I_2\cos\phi \end{aligned}\right\} \tag{8}$$

Determination of the voltage control equations of an induction motor

The manner of controlling the stator voltage of the induction motor for practicing the theory described above will now be discussed.

FIG. **4** is a cross-sectional view of a two phase induction motor identical to that shown in FIG. **1** in which mutually orthogonal stator windings **1-1'** and **2-2'** are shown. Let us denote the current flowing through the winding **1-1'** for creating flux Φ_{dr} in the direction of d axis by i_{ds} and the current flowing through the windng **2-2'** for creating flux Φ_{qr} in the direction of q axis. The directions of these currents are designated by dots and crisscrosses.

Due to the magnetic induction of the stator current i_{ds} and i_{qs}, rotor current flows through all squirrel cage rotor windings shown in FIG. **4**. For simplifying the description, only two rotor windings, i.e. a winding **3-3'** in the direction of the q axis and a winding **4-4'** in the direction of the d axis are considered and it is assumed that the rotor current can be expressed by reactangular coordinates of the current i_{dr} flowing through the rotor winding **3-3'** and of the current i_{qr} flowing through the rotor winding **4-4'**.

The currents i_{ds} and i_{dr} respectively flowing through the windings **1-1'** and **3-3'** shown in FIG. **4** create flux Φ_{dr} in the rotor along d axis as shown in FIG. **5**, while currents i_{qs} and i_{qr} respectively flowing through windings **2-2'** and **4-4'** create flux Φ_{qr} in the direction of q axis.

The fluxes Φ_{dr} and Φ_{qr} are given by

$$\left.\begin{aligned} \Phi_{dr} &= l_m i_{ds} - l_r i_{dr} \\ \Phi_{dr} &= l_m i_{qs} - l_r i_{qr} \end{aligned}\right\} \tag{9}$$

Assume now that the rotor is rotating in a direction shown in FIG. **4** at a speed of $\dot{\theta}$ (rad/sec), the following equations hold because windings **3-3'** and **4-4'** are short circuited through rotor winding resistance r_r.

$$\left.\begin{aligned} \dot{\theta}\Phi_{qr} + \frac{d\Phi_{dr}}{dt} &= r_r i_{dr} \\ -\dot{\theta}\Phi_{dr} + \frac{d\Phi_{qr}}{dt} &= r_r i_{qr} \end{aligned}\right\} \tag{10}$$

Suppose now that the fluxes Φ_{dr} and Φ_{qr} represent components along d and q axes of a rotating flux vector Φ_r shown in FIG. **5** having a magnitude of Φ_o and a flux angle ψ, fluxes Φ_{dr} and Φ_{qr} are given by the following equations (12)

$$\left.\begin{aligned} \Phi_{dr} &= \Phi_o\cos\psi \\ \Phi_{qr} &= \Phi_o\cos\psi \end{aligned}\right\} \tag{11}$$

By substituting equation (11) into equation (10), the rotor currents are expressed as follows. Thus,

$$\left.\begin{aligned} \dot{\theta}\Phi_o\sin\phi + \frac{d\Phi_o}{dt}\cos\phi - \dot{\phi}\Phi_o\sin\phi &= r_r i_{dr} \\ -\dot{\theta}\Phi_o\cos\phi + \frac{d\Phi_o}{dt}\sin\phi + \dot{\phi}\Phi_o\cos\phi &= r_r i_{qr} \end{aligned}\right\} \tag{12}$$

The output torque T_e of the induction motor shown in FIG. **4** is given by the following equations.

$$T_e = K_T(\Phi_{dr} i_{qr} - \Phi_{qr} i_{dr}) \tag{13}$$

By substituting equations (11) and (12) in equation (13) we obtain:

$$T_e = K_T \frac{\Phi_o^2}{r_r}(\dot{\phi} - \dot{\theta}) \tag{14}$$

Equation (14) means that the output torque T_e is precisely proportional to the slip frequency $(\dot{\phi}-\dot{\theta})$ (rad/sec) so long as the magnitude Φ_o of the rotating field is constant.

The stator currents i_{ds} and i_{qs} necessary to produce this output torque T_e are determined by substituting equations (11) and (12) into equation (9).

Thus,

$$\left.\begin{aligned} i_{ds} &= \left(\Phi_o/l_m + \frac{l_r}{r_r}\frac{d\Phi_o/l_m}{dt}\right)\cos\phi - \frac{l_r}{r_r}\Phi_o/l_m(\dot{\phi} - \dot{\theta})\sin\phi \\ i_{qs} &= \left(\Phi_o/l_m + \frac{l_r}{r_r}\frac{d\Phi_o/l_m}{dt}\right)\sin\phi + \frac{l_r}{r_r}\Phi_o/l_m(\dot{\phi} - \dot{\theta})\cos\phi \end{aligned}\right\} \tag{15}$$

To simplify equation (15), the following variables are introduced.

$$\left.\begin{aligned} I_o &= \Phi_o/l_m \\ I_2 &= \frac{l_r}{r_r}\Phi_o/l_m(\dot{\phi}-\dot{\theta}) \end{aligned}\right\} \quad (16)$$

By substituting equation (16) into equation (14) we obtain:

$$T_e = K_T\frac{l_m}{l_r}\Phi_o I_2 = K_T\frac{l_m^2}{l_r}I_o I_2 \quad (17)$$

Further, by substituting equation (16) into equation (15) we obtain:

$$\left.\begin{aligned} i_{ds} &= \left(I_o + \frac{l_r}{r_r}\frac{dI_o}{dt}\right)\cos\phi - I_2\sin\phi \\ i_{qs} &= \left(I_o + \frac{l_r}{r_r}\frac{dI_o}{dt}\right)\sin\phi + I_2\cos\phi \end{aligned}\right\} \quad (18)$$

Furthermore equation (16) shows that currents I_2 and I_o must satisfy the following equation.

$$I_2 = \frac{l_r}{r_r}(\dot{\phi}-\dot{\theta})I_o \quad (19)$$

where $\dot{\phi}=d\phi/dt$ and $\dot{\theta}=d\theta/dt$ and equation (19) is equivalent to the following equation.

$$\phi - \theta = \frac{r_r}{l_r}\int\frac{I_2}{I_o}dt \quad (20)$$

As above described, equation (17) corresponds to equation (16), equation (18) corresponds to equation (8) provided that $dI_o/dt=0$ (when I_o and Φ_o are constant), and equation (19) corresponds to equation (7). In other words, the current I_o shown by equation (16) corresponds to an exciting current necessary to create flux Φ_o, while current I_2 corresponds to a rotary current which passes current through a rotor winding orthogonal to flux Φ_o. Equation (17) shows that the output torque is proportional to the product of the magnitude Φ_o of the flux and the rotor current I_2. Assuming a constant flux Φ_o, the output torque T_e would be perfectly proportional to the current I_2. This is the same relation as the output torque of a separately excited direct current motor.

When the rotor angular position θ (rad.) the exciting current I_o and its rate of variation dI_o/dt are given for a desired torque T_e instructed to a two phase induction motion, we can determine currents i_{ds} and i_{qs} from equations (18) and (20) and when these currents are passed through the stator windings the output torque of the induction motor would become equal to the instructed value T_e.

In this manner, it is possible to control the output torque of the induction motor by controlling the stator currents (primary current) i_{ds} and i_{qs} in the same manner as in a DC motor, in order to supply currents i_{ds} and i_{qs} to the stator windings of an actual induction motor it is necessary to use current amplifiers. However, when the response speed and accuracy of the amplifiers are increased, the stability of the control becomes poor. Moreover, provision of the amplifiers increases the cost. For this reason, where stator winding voltages V_{ds} and V_{qs} are controlled instead to controlling the stator currents i_{ds} and i_{qs}, voltage amplifiers can be used which are not only economical but also can solve the problem of stability.

The manner of controlling the stator voltages V_{ds} and V_{qs} according to the principle described above will now be described as follows.

In FIG. 4, the fluxes Φ_{ds} and Φ_{qs} created in the stator in the directions of axes d and q and link with the stator windings are given by the following equations.

$$\left.\begin{aligned} \Phi_{ds} &= l_s i_{ds} - l_m i_{dr} \\ \Phi_{qs} &= l_s i_{qs} - l_m i_{qr} \end{aligned}\right\} \quad (21)$$

where l_s represents the self inductance (H) of the stator windings.

When voltages V_{ds} and V_{qs} are applied across the stator windings, the following equations hold:

$$\left.\begin{aligned} V_{ds} - \frac{d\Phi_{ds}}{dt} &= r_s i_{ds} \\ V_{qs} - \frac{d\Phi_{qs}}{dt} &= r_s i_{qs} \end{aligned}\right\} \quad (22)$$

where r_s represents the resistance of the stator windings.

Where it is assumed that all flux linking the rotor windings also link the stator windings, since in an ordinary induction motor, the leakage flux is extremely small with respect to the total linking flux, this assumption is correct and the following equations (23) hold.

$$\left.\begin{aligned} \Phi_{ds} &= \Phi_{dr} = \Phi_o\cos\phi = l_m I_o\cos\phi \\ \Phi_{qs} &= \Phi_{gr} = \Phi_o\sin\phi = l_m I_o\sin\phi \end{aligned}\right\} \quad (23)$$

Voltages V_{ds} and V_{qs} can be obtained as follows when equations (18) and (23) are substituted into equation (22).

$$\left.\begin{aligned} V_{ds} &= \left[r_s I_o + \left(l_m + l_r\frac{r_s}{r_r}\right)\frac{dI_o}{dt}\right]\cos\phi - [l_m I_o\dot{\phi} + r_s I_2]\sin\phi \\ V_{qs} &= \left[r_s I_o + \left(l_m + l_m\frac{r_s}{r_r}\right)\frac{dI_o}{dt}\right]\sin\phi + [l_m I_o\dot{\phi} + r_s I_2]\cos\phi \end{aligned}\right\} \quad (24)$$

Consequently, where the rotor angular speed $\dot{\theta}$ (rad/sec), exciting current I_o and its rate of change dI_o/dt are given, the desired instructed torque T_e is substituted in equation (17) to determine current I_2 which is substituted into equation (19) to determine $\dot{\phi}$ and ϕ is determined from equation (20). Then these values are substituted into equation (24) to calculate voltages V_{ds} and V_{qs} which when applied to the stator windings **1-1'** and **2-2'** shown in FIG. **4** give an output torque equal to the instructed torque T_e.

Although in the above voltage control equations for a two phase induction motor have been described, when the above described principle is applied to a three phase two pole induction motor, the three phase stator voltages V_a, V_b and V_c are determined as follows:

$$\left.\begin{aligned} V_a &= \left[r_sI_o + \left(l_m + l_r\frac{r_s}{r_r}\right)\frac{dI_o}{dt}\right]\cos\phi - (l_mI_o\dot{\phi} + r_sI_2)\sin\phi \\ V_b &= \left[r_sI_o + \left(l_m + l_r\frac{r_s}{r_r}\right)\frac{dI_o}{dt}\right]\cos\left(\phi - \frac{2\pi}{3}\right) - (l_mI_o\dot{\phi} + r_sI_2)\sin\left(\phi - \frac{2\pi}{3}\right) \\ V_c &= \left[r_sI_o + \left(l_m + l_r\frac{r_s}{r_r}\right)\frac{dI_o}{dt}\right]\cos\left(\phi - \frac{4\pi}{3}\right) - (l_mI_o\dot{\phi} + r_sI_2)\sin\left(\phi - \frac{4\pi}{3}\right) \end{aligned}\right\} \quad (25)$$

The values of $\dot{\phi}$ and ϕ in equation (25) are given by equations (19) and (20).

Where the mechanical angle of a P pole motor is given by θ, by substituting electrical angle $\theta' = (P/2)\cdot\theta$ of the motor into equations (19) and (20) the invention becomes applicable to any multipole induction motors.

As above described, this invention relates to a torque control system based on the principle described above. In the following, some of typical embodiments are illustrated.

EXAMPLE 1

(constant flux)

Where the magnitude of flux Φ_o is controlled always to be constant, current I_o also becomes constant and $d\Phi_o/dt = 0$ and $dI_o/dt = 0$ so that the voltage control equations (25) for a three phase induction motor are simplified as follows:

$$\left.\begin{aligned} V_a &= r_sI_o\cos\phi - (l_mI_o\dot{\phi} + r_sI_s)\sin\phi \\ V_b &= r_sI_o\cos\left(\phi - \frac{2\pi}{3}\right) - (l_mI_o\dot{\phi} + r_sI_2)\sin\left(\phi - \frac{2\pi}{3}\right) \\ V_c &= r_sI_o\cos\left(\phi - \frac{4\pi}{3}\right) - (l_mI_o\dot{\phi} + r_sI_2)\sin\left(\phi - \frac{4\pi}{3}\right) \end{aligned}\right\} \quad (26)$$

Since current I_o is constant, equation (20) becomes:

$$\phi = \theta + \frac{r_r}{l_rI_o}\int I_2dt \quad (27)$$

Noting that when flux Φ_o is constant, the output torque T_e is precisely proportional to current I_2 as shown by equation (17), one example of the torque control system for constant flux will be described hereunder.

FIG. **6** is a block diagram showing this example 1. More particularly, a pulse generator **6** is directly coupled to the shaft of a two pole three phase induction motor **5**, so that the pulse generator **6** generates a pulse signal 6_a as the motor **5** rotates. Assume now that the pulse generator **6** generates 8192 pulses as the motor makes one revolution. Also the generator **6** generates a direction discrimination signal 6_b depending upon the forward or reverse rotation of the motor **5**. These signals 6_a and 6_b are applied to a reversible counter **7**. In this example, this counter **7** comprises two step 13 digit reversible counter, and each time a pulse 6_a is applied from the pulse generator **6** its count is increased by one in the case of the forward rotation, whereas its count is decreased by one in the case of the reverse direction. Denoting the angle of rotation of the motor **5** in one revolution by θ (rad.), the count **30** of the reversible counter **7** which may have any value in a range of 0 to 8191, that is two step 13 bits, is given by $8192\times\theta/2\pi$, this θ corresponding to θ in equation 27.

A sampling pulse generator **8** is provided for generating a sampling pulse SP with a sampling period $T = 1/1000$ sec. which is used as an interruption input to an electronic computor **10** to be described later. Various elements bounded by do and dash lines constitute a digital computor **10**.

It should be understood that coefficient applicators **13, 14, 17, 18, 19, 20, 32, 33** and **34**; adders **23, 24, 25, 26** and **27**; multipliers **21** and **22**; a buffer register **12**, an integrator **15**; a differentiator **16**; and a trigonometric function generator **28** in the digital computor **10** are not located at any specific positions, and that these elements are constructed as common hardware elements utilized on the time division bases under the control of a program control unit **11** in the computer **10** during the operating cycle thereof. However, for the purpose of describing in detail the program processed by the computor utilized in this invention, these elements are shown as if they are constituted by independent hardwares. With this drawing an experienced computor programmer can readily prepare any program for carrying out the invention.

In another embodiment, various hardware elements in the block **10** are constituted by digital circuits permanently wired. However, in the following description it is assumed that the block **10** comprises a digital computor.

As the sampling pulse generator **8** generates a sampling pulse SP with a period of $T = 1/1000$ sec., this sampling pulse SP is applied to an interruption input terminal of a program control unit **11** of the computor **10** to trigger the control unit so that it sequentially executes steps 1 to step 8 of the programs to be described hereinafter. The programs are executed at each $T = 1/1000$ sec., and the time required for executing the programs of steps 1 to 8 is determined to be less than $T = 1/1000$ sec. The program control unit **11** interrupts the operation of the computer **10** or executes another program not related to this invention until the next sampling pulse SP is produced.

When the program control unit **11** executes the program of step 1 upon generation of a sampling pulse SP, the content or count **30** of the reversible counter **7** is written into the computor **10** and the written count is temporarily stored in a buffer register **12**. A specific memory address of the computor **10** may be used as the buffer register **12**.

When the program control unit **11** executes the program of the step 2, a digital data I_2 corresponding to the rotor current expressed by equation 17 and supplied from a torque instructor **9** is written into the computor **10** and this data is multiplied with a constant coefficient r_r/l_rI_o by the coefficient applicator **14** to obtain a data I_2r_r/l_rI_o which is integrated by an integrator **15** to form a data $\sigma^*(t)$. According to one method of calculating the output data $\sigma^*(t)$ of the integrator **15**, the output data at a given sampling point is expressed by the following equation wherein $\sigma^*(t-T)$ represents the out-

put data of the integrator **15** at the previous sampling point.

$$\sigma^*(t)=\sigma^*(t-T)+TI_2r_r/l_rI_o$$

where T represents the sampling time 1/1000 sec.

In this manner, as TI_2r_r/l_rI_o is cumulatively added to data $\sigma^*(t)$ at an interval of T seconds, the $\sigma^*(t)$ corresponds to an integral of the second right hand term of equation (27). Thus

$$\sigma^*(t)=\frac{r_r}{l_rI_o}\int I_2dt$$

Then, when the program control unit **11** executes the program of step 3 the data $8192/2\pi\cdot\theta$ which has been temporarily stored in the step 1 is read out of the buffer register **12** and then multiplied with a coefficient $2\pi/8192$ by the coefficient applicator **13** to form data θ corresponding to the righthand first term of equation (27). The data θ is added to data $\sigma^*(t)$ obtained in the second step 2 in the adder **23** to obtain a sum $\phi^*(t)$ which corresponds to the flux angle ϕ in equation (27).

Then, the program of step 4 is executed and the trigonometric function generator **28** calculates trigonometric functions cos ϕ, sin ϕ,

$$\cos\left(\phi-\frac{2\pi}{3}\right) \text{ and } \sin\left(\phi-\frac{2\pi}{3}\right)$$

based on the flux angle ϕ obtained in step 3.

Then, the program of step 5 is executed in which the flux angle $\phi(t)$ obtained in step 3 is differentiated by the differentiator **16** to form data $\dot{\phi}^*(t)$. This data can be calculated by the following equation:

$$\dot{\phi}^*(t)=\frac{1}{T}[\phi^*(t)-\phi^*(t-T)]$$

wherein ϕ^*t represents the flux angle $\phi^*(t)$ at a given sampling time, $\phi^*(t-T)$ the flux angle at a preceding sampling point and T a sampling time equal to 1/1000 sec. The differentiated data $\dot{\phi}^*$ is multiplied with a coefficient l_mI_o by the coefficient applicator **17** to form data $l_mI_o\dot{\phi}$.

Then, the program of step 6 is executed in which the output I_2 from the torque instructor **9** is multiplied with a constant coefficient r_s by the coefficient applicator **18** to form data r_sI_2 which is subtracted by adder **24** from data $l_mI_o\dot{\phi}$ calculated in step **5** to form data $-(l_mI_o\dot{\phi}+r_sI_2)$ which corresponds to the amplitude of the sine functions in the righthand terms of equations (26).

Then, the program of step 7 is executed to obtain V_a and V_b in equations 27 from cos ϕ, sin ϕ,

$$\cos\left(\phi-\frac{2\pi}{3}\right),$$

$$\sin\left(\phi-\frac{2\pi}{3}\right)$$

obtained in step 4, and $-(l_mI_o\dot{\phi}+r_sI_2)$ obtained in step 6 according to the following calculations by using multipliers **21** and **22** and adders **25** and **26**.

$$\left.\begin{aligned} V_a&=r_sI_o\cos\phi-(l_mI_o\dot{\phi}+r_sI_2)\sin\phi \\ V_b&=r_sI_o\cos\left(\phi-\frac{2\pi}{3}\right)-(l_mI_o\dot{\phi}+r_sI_2)\sin\left(\phi-\frac{2\pi}{3}\right)\end{aligned}\right\} \quad (26)'$$

V_a and V_b are subtracted in adder **27** to obtain $V_c=-(V_a+V_b)$ because the following equation (28) always holds from equations (26).

$$V_a+V_b+V_c=0 \quad (28)$$

The program of step 8 is then executed and data V_a, V_b and V_c obtained in step 7 are multiplied with a constant coefficient 2048/E respectively by coefficient applicators **32, 33** and **34** to form data V_a^*, V_b^* and V_c^* which are respectively written by the computor **10** into three pairs of binary 12 bit holding registers, not shown, in a pulse width modulation circuit **38** (PWM). Assume now that E of the coefficient 2048/E is equal to the maximum value of the voltages V_a, V_b and V_c, the values of the voltages V_a^*, V_b^* and V_c^* would lie in a range of from −2048 to +2047 in this example so that the 12 bit holding registors would not overflow.

The process of calculating the instructed stator voltages V_a^*, V_b^* and V_c^* with the computor **10** has been described. The operation of the PWM circuit **38** will now be described as follows. The detail of the PWM circuit **38** is shown in FIG. 7. Thus, binary 12 bit data V_a^*, V_b^* and V_c^* produced by the computor **10** are stored in holding registers **39A, 39B** and **39C** respectively, each of which being a 12 bit register capable of storing data in a range of from −2048 to +2047. The content of the holding register **39A** is inputted to a coincidence circuit **52A** over a 12 bit data line.

There are also provided an oscillator **40** generating a clock pulse of a constant frequency, for example 5 MHz, and a 2 step 12 bit reversible counter **41** capable of operating between −2048 and +2047. While its UP input is "1"(high level logic) the count of the counter **41** increases each time it receives a clock pulse CLK and when its count reaches a maximum value of +2047, the counter produces a MAX output of "1". This MAX output is applied to a set terminal S of a flip-flop circuit **42** to make "1" the output signal DN at the output terminal **1** and "0" the output signal UP at the output terminal **0**. The signal DN changes the reversible counter to a down count mode, whereby the count of the reversible counter **41** decreases each time it receives a clock pulse CLK. Finally its count reaches a minimum value of −2048. Then, the MIN output of the counter becomes "1" and this MIN output is applied to the reset terminal R of the flip-flop circuit **42** to change its output UP to "1" and output DN to "0". In this manner, as shown in FIG. **8***a*, the count of the reversible counter **41** repeatedly increases and decreases with a constant inclination in a range of from −2048 and +2047 and at a period of 4096×2/5 MHz=1.64ms. The signal DN from the output **1** of the flip-flop circuit **42** varies as shown in FIG. **8***b*. The count of the reversible counter **41** is applied to the coincidence circuits **52A–52C**.

The coincidence circuits produce outputs "1" only when the contents of the holding registers **39A–39C** coincide with the count of the reversible counter **41**.

When AND gate circuits **45A** through **45C** provided on the side of inputs J of J - K flip-flop circuits **47A–47C** are enabled these flip-flop circuits are set to produce outputs "1" at their output terminals **1**, whereas when AND gate circuits **46A–46C** on the side of the inputs K are enabled the flip-flop circuits **47A–47C** are reset to produce outputs "1" at their input terminals **0**. At this time, when the data V_a* are produced by the computor **10** has a magnitude of +500v as shown by a straight line **54** shown in FIG. **8***a*, at times t_1 and t_2, the contents of the holding register **39A** and the reversible counter coincide with each other, so that the coincidence circuit **52A** produces an output "1". Since signal DN is "1" at time t_1 the flip-flop circuit **47A** is set, whereas at time t_2 the UP signal is "1", so that the flip-flop circuit **47A** would be reset. Thus, the outputs of the output terminals **1** and **0** of the flip-flop circuit **47A** vary as shown in FIGS. **8***c* and **8***d* respectively. On the other hand, the delay circuits **48A–48C** produce output signals a_1 shown in FIG. **8***e* which lags by D than the leading ends of output signals "1" produced by the output terminals **1** of the flip-flop circuits **47A–47C**, and the delay circuits **49A–49C** produce output signals a_2 which lags by D than the leading ends of the output signals "1" produced by the output terminals **0** of the flip-flop circuits **47A–47C**. These output signals a_1 and a_2 are used to drive transistor power amplifiers **39–41** to be described later.

As shown in FIGS. **8***e* and **8***f*, the pulse width of the output signals a_1 and a_2 are modulated by the contents of the holding registers **39A–39C**. More particularly, when the value of voltage V_a* is equal to −2048 the output signal a_1 is always "0" and as the value of V_a* increases from −2048 the interval in which the signal a_1 becomes "1" is prolonged. The output signal a_1 is always "1" when V_a* becomes equal to +2047. When the output signal a_1 is "1", the output signal a_2 is always "0". Conversely, when the signal a_2 is "1", signal a_1 is "0". The purpose of establishing interval D during which both signals a_1 and a_2 become "0" is to protect the transistors of the transistor power amplifiers **39–41**.

In FIG. **7**, output signals b_1 and b_2 for phase B are subjected to pulse width modulation by the holding register **39B** that stores the output data V_b* of the computor **10** in the same manner as the output signals a_1 and a_2 for phase A.

Having described the operation of the PWM circuit **38**, we now describe the construction and operation of the transistor power amplifiers **39–41**.

As shown in FIG. **6**, the A phase outputs a_1 and a_2 of the PWM circuit **38** are applied to the transistor power amplifier **39** which supplies a stator voltage V_a to the induction motor **5**. In the same manner, the B phase outputs b_1 and b_2 are applied to the power amplifier **40** to produce stator voltage V_b and the C phase voltage c_1 and c_2 are applied to the power amplifier **41** to produce stator voltage V_c.

The detail of the power amplifiers **39**, **40** and **41** is shown in FIG. **9**. Since these amplifiers have the same construction, the power amplifier **39** alone will be described in detail. Thus, this power amplifier comprises two power transistors **55** and **56** connected across DC lines +E and −E so that the stator voltage V_a of the induction motor **5** is switched between +EV and −EV by alternately turning ON and OFF these transistors.

The base drive circuit **57** of the transistor **55** turns ON the same when the output signal a_1 of the PWM circuit **38** is "1" to make the stator voltage V_a to be equal to +EV whereas when the signal a_1 is "0" turns OFF the transistor **55**. In the same manner, the base drive circuit **58** of transistor **56** turns ON the same when the output signal a_2 of the PWM circuit **38** is "1" to make the stator voltage V_a to be equal to −EV, whereas turn OFF the transistor **56** when the output signal a_2 is "0".

It should be noted that when signal a_1 changes to "0" to turn OFF the transistor **55**, it does not turn off immediately due to the inductance of the motor. For this reason, at the time of changing the signal a_1 from "1" to "0", if the signal a_2 is immediately changed from "0" to "1", the DC source **59** would be short circuited, thus rupturing transistors **55** and **56**. For this reason the delay circuits **48A–48C** and **49A–49C** are included in the PWM circuit **38** for the purpose of changing signal a_2 to "1" only after the signal a_1 has been changed to "0" and the transistor has been complètely turned OFF.

The base drive circuit **57** comprises an insulating transformer **67** with its primary winding, not shown, energized with AC voltage, a bridge connected rectifier **66** and a capacitor **68** connected across the output terminals of the rectifier to produce a floating DC voltage. The negative terminal of capacitor **68** is connected to the emitter electrode of transistor **55**, such floating DC voltage being necessary because the emitter voltage V_a varies alternately between ±EV. When the output signal a_1 applied to a photocoupler **60** in the base drive circuit **57** becomes "1", the photocoupler produces an output signal across output terminals **61** and **62** which turns ON transistor **65**. Accordingly, the floating DC voltage passes base current to the power transistor **55** via a resistor **64** to turn ON the transistor **55** whereby to change the stator voltage to +E.

On the other hand, as the signal a_1 becomes "0", the photocoupler **60** does not produce an output so that current flows through the base electrode of the transistor **65** via resistor **63** thus turning ON transistor **65** thereby turning OFF the power transistor **55**. The base drive circuit **58** for the power transistor **56** has the same construction.

Where data V_a*, V_b* and V_c* outputted by the computor **10** vary with time t as shown in FIG. **10***a*, the voltages V_a, V_b and V_c applied to the motor **5** from the PWM circuit **38** via transistor power amplifiers **39–41** assume two values of +E and −E as shown in FIGS. **10***b*, **10***c* and **10***d* and the data V_a*, V_b* and V_c* become rectangular waves pulse width modulated with a triangular wave **53** shown in FIG. **10***a*. The mean values V_a, V_b and V_c of the rectangular voltages $\bar{V}_a$, $\bar{V}_b$ and $\bar{V}_c$ from which triangular carrier frequency harmonic components have been eliminated are

$$\bar{V}_a = \frac{E}{2048} * V_b^*,\ \bar{V}_c = \frac{E}{2048} * V_b^* \text{ and } \bar{V}_c = \frac{E}{2048} * V_c^*$$

meaning that the mean values $\bar{V}_a$, $\bar{V}_b$ and $\bar{V}_c$ are exactly proportional to the instructed volfages V_a*, V_b* and V_c*. Thus, when pulse width modulated rectangular waves as shown in FIGS. **10**$_b$, **10**$_c$ and **10**$_d$ are applied to the stator windings of the motor **5**, the stator currents become smooth currents in which the harmonic components of the rectangular waveform voltages have been eliminated by the reactance of the motor **5**. As a consequence, the flux created in the motor is proportional to these smooth currents. Thus, when the mean values of the pulse width modulated waveform voltages shown in FIGS. **10**$_b$, **10**$_c$ and **10**$_d$ and applied to the motor are

proportional to the instructed value, it is equivalent to a case where voltages expressed by equations (26) are applied. In other words, the induction motor is operated by a voltage control by equations (26) and (27).

From the foregoing description, it will be clear that with the construction shown in FIG. **6**, the induction motor **5** can produce a torque exactly proportional to the torque I_2 given by the torque instructor **9**.

EXAMPLE 2

(maximum voltage increasing control)

In Example 1, voltages V_a, V_b and V_c were controlled according to equations 26. These equations can be modified as follows.

$$\left.\begin{aligned} V_a &= \sqrt{(r_sI_o)^2 + (l_mI_o\dot{\phi} + r_sI_2)^2}\cos(\phi+\delta) \\ V_b &= \sqrt{(r_sI_o)^2 + (l_mI_o\dot{\phi} + r_sI_2)^2}\cos\left(\phi+\delta-\frac{2\pi}{3}\right) \\ V_c &= \sqrt{(r_sI_o)^2 + (l_mI_o\dot{\phi} + r_sI_2)^2}\cos\left(\phi+\delta-\frac{4\pi}{3}\right) \end{aligned}\right\} \quad (29)$$

provided that

$$\tan\delta = \frac{l_mI_o\dot{\phi} + r_sI_2}{r_sI_o}.$$

From FIG. **9** it can be noted that the maximum values of voltages V_a, V_b and V_c can not exceed the DC source voltage $\pm$EV. Thus the amplitude term

$$\sqrt{(r_sI_o)^2 + (l_mI_o\dot{\phi} + r_sI_2)^2}$$

in equations 29 does not exceed the voltage E. Where it is necessary to increase the amplitude term it is necessary to increase the DC voltage $\pm$EV. This requires, however, to use power transistors **55** and **56** having a high breakdown voltage. The line voltages $V_{ab}=V_a-V_b$, $V_{bc}=V_b-V_c$ and $V_{ca}=V_c-V_a$ are expressed by the following equations:

$$\left.\begin{aligned} V_{ab} &= \sqrt{3}\sqrt{(r_sI_o)^2 + (l_mI_o\dot{\phi} + r_sI_2)^2}\cos\left(\phi+\delta+\frac{\pi}{6}\right) \\ V_{bc} &= \sqrt{3}\sqrt{(r_sI_o)^2 + (l_mI_o\dot{\phi} + r_sI_2)^2}\cos\left(\phi+\delta+\frac{\pi}{6}-\frac{2\pi}{3}\right) \\ V_{ca} &= \sqrt{3}\sqrt{(r_sI_o)^2 + (l_mI_o\dot{\phi} + r_sI_2)^2}\cos\left(\phi+\delta+\frac{\pi}{6}-\frac{4\pi}{3}\right) \end{aligned}\right\} \quad (30)$$

As above described the amplitude term

$$\sqrt{(r_sI_o)^2 + (l_mI_o\dot{\phi} + r_sI_2)^2}$$

does not exceed E, so that line voltages do not exceed $\sqrt{3}$E. In other words, in Example 1, the maximum value of the line voltages applied to the motor is limited to $\sqrt{3}$E.

Since the power amplifiers **39–41** shown in FIG. **9** have a capability of producing a maximum line voltage of 2E, in Example 1, the maximum line voltage is lesser by $\sqrt{3}/2$. In contrast, Example 2 can produce maximum line voltages up to 2E.

The voltage control equations in Example 2 are shown as follows.

$$\left.\begin{aligned} V_a &= \sqrt{(r_sI_o)^2 + (l_mI_o\dot{\phi} + r_sI_2)^2}\cos(\phi+\delta) + V_N \\ V_b &= \sqrt{(r_sI_o)^2 + (l_mI_o\dot{\phi} + r_sI_2)^2}\cos\left(\phi+\delta-\frac{2\pi}{3}\right) + V_N \\ V_c &= \sqrt{(r_sI_o)^2 + (l_mI_o\dot{\phi} + r_sI_2)^2}\cos\left(\phi+\delta-\frac{4\pi}{3}\right) + V_N \end{aligned}\right\} \quad (31)$$

These equations (31) are similar to equations (26) except that the same variable V_N is added to each right hand term. In the equations (31) the line voltages V_{ab}, V_{bc} and V_{ca} applied to the motor are equal to those expressed by equations (31). This means that the control is effected according to the above described principle of the induction motor. In Example 2, the amplitude term

$$\sqrt{(r_sI)^2 + (l_mI_o\dot{\phi} + r_sI_2)^2}$$

can have a maximum value of

$$\frac{2}{\sqrt{3}}E.$$

The variable V_N in the voltage control equations (31) is selected as follows. Thus, when each of the first terms on the righthand sides of equations (31)

$$\sqrt{(r_sI_o)^2 + (l_mI_o\dot{\phi} + r_sI_2)^2}\cdot\cos(\phi+\delta),$$

$$\sqrt{(r_sI_o)^2 + (l_mI_o\dot{\phi} + r_sI_2)^2}\cos\left(\phi+\delta-\frac{2\pi}{3}\right)$$

and

$$\sqrt{(r_sI_o)^2 + (l_mI_o\dot{\phi} + r_sI_2)^2}\cos\left(\phi+\delta-\frac{4\pi}{3}\right)$$

lies in a range of $-$E and $+$E, V_N is selected to be zero. The value of V_N is determined such that when either one of the above mentioned first terms decreases below $-$E, the righthand term of each phase will become $-$E, whereas when either one of the first terms increases beyond $+$E, the righthand term of each phase will become $+$E.

FIGS. **11***a* and **11***b* are a graph showing the manner of changing V_N when the amplitude value

$$\sqrt{(r_sI_o)^2 + (l_mI_o\dot{\phi} + r_sI_2)^2}$$

shown in equations (31) is equal to

$$\frac{2}{\sqrt{3}}E$$

in which the dotted lines of FIG. **13***a* show the first terms of the righthand sides of equations (31). More particularly, since the first term

$$\sqrt{(r_sI_o)^2 + (l_mI_o\dot{\phi} + r_sI_2)^2}$$

on the righthand side for voltage V_a expressed by equations (31) is larger than +E, V_N is determined such that V_a would be equal to +E, whereas where $\phi+\delta=\pi/6-\pi/2$ since the first term on the righthand side

$$\sqrt{(r_sI_o)^2 + (l_mI_o\dot{\phi} + r_sI_2)^2}\cos\left(\phi + \delta - \frac{4\pi}{3}\right)$$

for phase voltage V_c is less than −E the value of V_N is determined such that V_c would be equal to −EV. In the same manner V_N is determined as shown in FIG. **11***b*. Thus phase voltages V_a, V_b and V_c expressed by equations (31) vary with $\phi+\delta$ as shown by solid lines in FIG. **11***a*. FIG. **11***a* shows that the permissible maximum value of the phase voltages V_{ab}, V_{bc} and V_{ca} is 2E. The detail of the second embodiment will be described in detail with reference to FIG. **12**.

The construction of the second embodiment is identical to that of embodiment **1** except the block **10** shown in FIG. **6**. In the second embodiment, the computor is constructed as shown in a block **69**. The processing effected by block **69** is the same as that effected by block **10** of the embodiment **1**. The program control unit **50** in the block or computor **69** processes the steps 1 to 7 just in the same manner as in the first embodiment to calculate V_a-V_N, V_b-V_N and V_c-V_N in equations (31). After executing the steps 1 to 7, the program control unit **50** executes the program of the step 8 in which V_a-V_N, V_b-V_N and V_c-V_N obtained in the step 7 are respectively multiplied with a constant coefficient 2048/E to obtain data V_a*, V_b* and V_c*. While in the first embodiment a permissible range of the values of V_a, V_b and V_c obtainable from equations (26) is from −E to +E, in the second embodiment, since the permissible range of V_a-V_N, V_b-V_N and V_c-V_N in equations (31) is from

$$-\frac{2}{\sqrt{3}}E \text{ to } +\frac{2}{\sqrt{3}}E.$$

the data V_a*, V_b* and V_c* shown in FIG. **12** would have values in a range of from

$$-\frac{2}{\sqrt{3}}\times 2048 \text{ to } +\frac{2}{\sqrt{3}}\times 2047.$$

Then the program control unit **50** executes the program of step 9. A minimum value selector **70** selects the minimum one of data V_a*, V_b* and V_c* as a signal MIN which is subtracted from a constant value −2048 in a subtractor **72** to input data (−2048−MIN) to a polygonal line function generator **74**, which when its input is negative produces an output V_{N1}="0" whereas when its input is positive produces an output equal to the input. Accordingly, when the minimum value MIN is smaller than −2048, V_{N1}=−2048−MIN, whereas when the minimum value MIN is larger than −2048, V_{N1}=0.

Then, the program of step 10 is executed and the maximum selector **71** produces the largest one of the data V_a*, V_b* and V_c* as an output MAX which is subtracted from a constant value +2047 in a subtractor **73** to produce data (+2047−MAX) which is inputted to the polygonal line function generator **75**, which when its input is positive produces an output V_{N2}="0", whereas when its input is negative produces an output V_{N2} equal to the input. Consequently, when the maximum value MAX is larger than +2047, V_{N2}=2047−MAX, whereas when the maximum value MAX is smaller than +2047, V_{N2}=0. So long as the data V_a-V_N, V_b-V_N and V_c-V_N calculated by equation (31) lie in a range of from

$$-\frac{2}{\sqrt{3}}E \text{ and } +\frac{2}{\sqrt{3}}E$$

the minimum value MIN is lesser than −2048 and the maximum value MAX does not exceed +2047. As a consequence, either one of the data V_{N1} and V_{N2} is always zero.

Then the program of step 11 is executed and data V_{N1} and V_{N2} are added together in an adder **76** to form data V_N* which is added to data V_a*, V_b* and V_c* respectively obtained by the program of step 8 by adders **77**, **78** and **79** respectively to obtain data V_a', V_b' and V_c'. These data are respectively written into three pairs of 12 bit holding registers in the PWM circuit **38** by the computor **69**. When either one of the data V_a*, B_b* and V_c* is smaller than −2048 or larger than +2047, since the data V_N* is determined such that the sum of such data and V_N* would become equal to −2048 or +2047, the data V_a', V_b' and V_c' always lies in a range of from −2048 to +2047 so that the three pairs of the holding registers A, B and C may be of the 12 bit type. Accordingly, in this embodiment 2 too, the PWM circuit **38** and power amplifiers **39–41** having the same construction as in embodiment 1 can be used.

EMBODIMENT 3

(flux change torque control)

In the above described maximum voltage increase control of embodiment 2, the permissible maximum value of the voltage amplitude

$$\sqrt{(r_sI_o)^2 + (l_mI_o\dot{\phi} + r_sI_2)^2} \text{ was } \frac{2}{\sqrt{3}}$$

and voltage E was limited by the breakdown voltage of the power transistors of the power amplifiers shown in FIG. **9**. In an application requiring a high motor speed $\dot{\theta}$, the flux angular speed $\dot{\phi}$ is also high and the voltage amplitude value

$$\sqrt{(r_sI_o)^2 + (l_mI_o\dot{\phi} + r_sI_2)^2}$$

should be larger than

$$\frac{2}{\sqrt{3}} E.$$

When $\dot{\phi}$ is large, in the embodiment 2, the flux current I_o is decreased in order to make the amplitude value to be less than

$$\frac{2}{\sqrt{3}}.$$

In such a case, however, as can be noted from equation (17) the output torque T_e tends to decrease for the same rotor current I_2. Consequently, in the Embodiment 3, to obviate this difficulty, when the motor speed $\dot{\theta}$ is less than a predetermined speed $\dot{\theta}_B$ (base speed) the exciting current I_o is maintained at a constant or rated value I_{OB}, whereas when the motor speed is higher than $\dot{\theta}_B$ the exciting current I_o is decreased so as to maintain the amplitude value

$$\sqrt{(r_sI_o)^2 + (l_mI_o\dot{\phi} + r_sI_2)^2}$$

to be always smaller than

$$\frac{2}{\sqrt{3}} E,$$

thus fully utilizing the rating of the induction motor.

In this embodiment, since the exciting current I_o varies the following voltage equations are used in which a variable U_N is added to equations (25)

$$\left.\begin{aligned}
V_a &= \left[r_sI_o + \left(l_m + l_r\frac{r_s}{r_r}\right)\frac{dI_o}{dt}\right]\cos - (l_mI_o\dot{\phi} + r_sI_2)\sin\phi + V_N \\
V_b &= \left[r_sI_o + \left(l_m + l_r\frac{r_s}{r_r}\right)\frac{dI_o}{dt}\right]\cos\left(\phi - \frac{2\pi}{3}\right) - (l_mI_o\dot{\phi} + r_sI_2) \\
&\quad \sin\left(\phi - \frac{2\pi}{3}\right) + V_N \\
V_c &= \left[r_sI_o + \left(l_m + l_r\frac{r_s}{r_r}\right)\frac{dI_o}{dt}\right]\cos\left(\phi - \frac{4\pi}{3}\right) - (l_mI_o\dot{\phi} + r_sI_2) \\
&\quad \sin\left(\phi - \frac{4\pi}{3}\right) + V_N
\end{aligned}\right\} \quad (32)$$

$$\text{and} \quad \left.\begin{aligned}
\phi - \theta &= \frac{r_r}{l_r}\int\frac{I_2}{I_o}\,dt \\
\dot{\phi} - \dot{\theta} &= \frac{r_r}{l_r}\cdot\frac{I_2}{I_o}
\end{aligned}\right\} \quad (33)$$

Equations (32) can be modified as follows.

$$\left.\begin{aligned}
V_a &= \sqrt{\left[r_sI_o + \left(l_m + l_r\frac{r_s}{r_r}\right)\frac{dI_o}{dt}\right]^2 + [l_mI_o\dot{\phi} + r_sI_2]^2}\,\cos(\phi + \gamma) + V_N \\
V_b &= \sqrt{\left[r_sI_o + \left(l_m + l_r\frac{r_s}{r_r}\right)\frac{dI_o}{dt}\right]^2 + [l_mI_o\dot{\phi} + r_sI_2]^2}\,\cos\left(\phi + \gamma - \frac{2\pi}{3}\right) + V_N \\
V_c &= \sqrt{\left[r_sI_o + \left(l_m + l_r\frac{r_s}{r_r}\right)\frac{dI_o}{dt}\right]^2 + [l_mI_o\dot{\phi} + r_sI_2]^2}\,\cos\left(\phi + \gamma - \frac{4\pi}{3}\right) + V_N
\end{aligned}\right\} \quad (34)$$

$$\text{where } \tan\gamma = \frac{l_mI_o\dot{\phi} + r_sI_2}{r_sI_o + \left(l_m + l_r\frac{r_s}{r_r}\right)\frac{dI_o}{dt}}$$

As above described, it is impossible to make the amplitude value

$$\sqrt{\left[r_sI_o + \left(l_m + l_r\frac{r_s}{r_r}\right)\frac{dI_o}{dt}\right]^2 + [l_mI_o\dot{\phi} + r_sI_2]^2}$$

in equation (34) to be larger than

$$\frac{2}{\sqrt{3}} E.$$

In other words, the following relation should hold.

$$\left[r_s I_o + \left(l_m + l_r \frac{r_s}{r_r}\right) \frac{dI_o}{dt}\right]^2 + [l_m I_o \dot{\phi} + r_s I_2]^2 \leqq \frac{4}{3} E^2$$

Assuming a sampling period of T=1/1000 sec., and that the value of the current I_o at one sampling period before is equal to I_o^*, the following relation must be satisfied.

$$\left[r_s I_o + \left(l_m + l_r \frac{r_s}{r_r}\right) \frac{1}{T} (I_o - I^*_o)\right]^2 + [l_m I_o \dot{\phi} + r_s I_2]^2 \leqq \frac{4}{3} E^2 \quad \text{(A)}$$

Substituting

$$\dot{\phi} = \dot{\theta} + \frac{r_r}{l_r} \frac{I_2}{I_o}$$

in equation (33) into equation A,

$$\left[r_s I_o + \left(l_m + l_r \frac{r_s}{r_r}\right) \frac{1}{T} (I_o - I_o^*)\right]^2 + \left[l_m I_o \dot{\theta} + \left(\frac{l_m}{l_r} r_r + r_s\right) I_2\right]^2 \leqq \frac{4}{3} E^2 \quad (35)$$

In the embodiment 2, for the purpose of satisfying equations (35) the exciting current I_o is controlled such that the following equation holds when the absolute value of the motor speed $\dot{\theta}$ is higher than the base speed $\dot{\theta}_B$.

$$(r_s I_o)^2 + \left[l_m I_o |\dot{\theta}| + \left(\frac{l_m}{l_r} r_r + r_s\right) I_{2m}\right]^2 = \frac{4}{3} E^2 - \alpha^2 \quad (36)$$

In this equation, I_o is always positive and I_{2m} represents the maximum value ($|I_2| \leqq I_{2m}$) of the rotor current I_2. α^2 has a constant value and is selected to be a minimum value among values which satisfies the following relation regardless of the absolute value $|I_o - I_o^*|$ of any exciting current variation in a range of $|\theta| > \theta_B$.

$$\left[r_s I_o + \left(l_m + l_r \frac{r_s}{r_r}\right) \frac{1}{T} |I_o - I_o^*|\right]^2 - (r_s I_o)^2 < \alpha^2 \quad (37)$$

When equations (37) and (38) hold, the condition of equation (35) is satisfied. Because when equation (36) is substituted into equation (37) we can obtain the following relation.

$$\left[r_s I_o + \left(l_m + l_r \frac{r_s}{r_r}\right) \frac{1}{T} |I_o - I_o^*|\right]^2 + \quad (38)$$

-continued

$$\left[l_m I_o |\dot{\theta}| + \left(\frac{l_m}{l_r} r_r + r_s\right) I_{2m}\right]^2 < \frac{4}{3} E^2$$

which means that the following relations always hold.

$$\left[r_s I_o + \left(l_m + l_r \frac{r_s}{r_r}\right) \frac{1}{T} (I_o - I_o^*)\right]^2 \leqq \left[r_s I_o + \left(l_m + l_r \frac{r_s}{r_r}\right) \frac{1}{T} |I_o - I_o^*|\right]^2 \quad (39)$$

$$\left[l_m I_o \dot{\theta} + \left(\frac{l_m}{l_r} r_r + r_s\right) I_{2m}\right]^2 \leqq \left[l_m I_o |\dot{\theta}| + \left(\frac{l_m}{l_r} r_r + r_s\right) I_{2m}\right]^2 \quad (40)$$

It can be understood that equation (35) can be derived out from equations (38), (39) and (40).

Regarding the value of α^2 in equation (37), equation (36) shows that as α^2 decreases voltage

$$\frac{2}{\sqrt{3}} E$$

which is the maximum limit of the power amplifiers can be applied to the induction motor, thereby increasing the efficiency. For this reason, it can be understood from equation (37) that smaller values of $|I_o - I_o^*|$ are preferred. Since current I_o is controlled so as to always satisfy equation (36), $|I_o - I_o|$ corresponds to a function of the rate of change

$$\frac{d|\dot{\theta}|}{dt}$$

of the motor speed, the function can be obtained as follows. More particularly, by differentiating the both sides of equation (36) with reference to time t we obtain

$$2 r_s^2 I_o \frac{dI_o}{dt} + 2 l_m \left[l_m I_o |\dot{\theta}| + \left(\frac{l_m}{l_r} r_r + r_s\right) I_{2m}\right] \left[|\dot{\theta}| \frac{dI_o}{dt} + I_o \frac{d|\dot{\theta}|}{dt}\right] = 0 \quad (36)'$$

By substituting

$$\frac{dI_o}{dt} = \frac{I_o - I_o^*}{T}$$

into equation (36)' we obtain

$$\frac{d|\dot{\theta}|}{dt} = \quad (36)''$$

-continued

$$\frac{r_s^2 I_o + l_m|\dot{\theta}|\left[l_m I_o|\dot{\theta}| + \left(\frac{l_m}{l_r} r_r + r_s\right) I_{2m}\right]}{l_m I_o\left[l_m I_o|\dot{\theta}| + \left(\frac{l_m}{l_r} r_s + r_r\right) I_{2m}\right]} \frac{(I_o - I_o^*)}{T}$$

Consequently, the absolute value of

$$\frac{d|\dot{\theta}|}{dt}$$

can be expressed as follows.

$$\left|\frac{d|\dot{\theta}|}{dt}\right| = \left\{\frac{r_s^2}{l_m\left[l_m I_o|\dot{\theta}| + \left(\frac{l_m}{l_r} r_r + r_s\right) I_{2m}\right]} + \frac{|\dot{\theta}|}{I_o}\right\} \frac{|I_o - I_o^*|}{T} \quad (41)$$

As an example, the limiting value of the acceleration

$$\left|\frac{d|\dot{\theta}|}{dt}\right|$$

was calculated by substituting into equation (42) the following constants of a two pole three phase standard induction motor having a rating of 3.7 KW, 200 V and 14.6A.

$$\left.\begin{array}{l} r_s = 0.368 \text{ ohm} \\ r_r = 0.457 \text{ ohm} \\ l_s = l_r = 0.061\ (H) \\ l_m = 0.059\ (H) \\ I_{oB} = 7.4 \text{ Amp.} \\ I_{2m} = 18.8 \text{ Amp.} \\ E = 141 \text{ volts} \end{array}\right\} \quad (42)$$

In this example, $\alpha = 10$ V was selected. Substitution of $I_o = I_{oB} = 7.4$ Amp into equation (36) results in $|\dot{\theta}| = 337$ (rad/sec) = 3220 rpm meaning that the base speed should be $\dot{\theta}_B = 337$ (rad/sec).

When the following equation (B) holds under any condition, equation (37) described above would always hold.

$$\frac{|I_o - I_o^*|}{T} < \frac{\sqrt{(r_s I_o)^2 + \alpha^2} - r_s I_o}{l_m + l_r \frac{r_s}{r_r}} \quad (B)$$

The righthand side of equation (B) decreases as the positive exciting current I_o when $\alpha = 10$ V is constant. Thus, the righthand term becomes a minimun when $I_o = I_{oB}$ and equation (37) always holds when

$$\frac{|I_o - I_o^*|}{T} < \frac{\sqrt{(r_s I_{oB})^2 + \alpha^2} - r_s I_{oB}}{l_m + l_r \frac{r_s}{r_r}} = \quad (43)$$

-continued

$$\frac{\sqrt{(0.368 \times 7.4)^2 + 10^2} - 0.368 \times 7.4}{0.059 + 0.061 \times \frac{0.368}{0.457}} = 70.64\ (A/\text{sec})$$

Furthermore, the coefficient of the righthand side of equation (41) can be calculated as follows from equation (36).

$$\frac{r_s^2}{l_m\left[l_m I_o|\dot{\theta}| + \left(\frac{l_m}{l_r} r_r + r_s\right) I_{2m}\right]} + \frac{|\dot{\theta}|}{I_o} = \quad (C)$$

$$\frac{r_s^2}{l_m\sqrt{\frac{4}{3}E^2 - \alpha^2 - (r_s I_o)^2}} + \frac{|\dot{\theta}|}{I_o}$$

This first term of the righthand side of this equation (C) becomes a minimum value

$$\frac{0.368}{0.059\sqrt{\frac{4}{3} \times 141^2 - 10^2}} = 0.014\ (\text{rad/sec}/A)$$

when $I_o = 0$, whereas the second term

$$\frac{|\dot{\theta}|}{I_o}$$

becomes $|\dot{\theta}| = \theta_B$, and assumes a minimum value $\dot{\theta}_B/I_{oB} = 337/7.4 = 45.541$ (rad/sec/A). Thus, the following equation (44) holds at any time.

$$\frac{r_s^2}{l_m\left[l_m I_o|\dot{\theta}| + \left(\frac{l_m}{l_r} r_r + r_s\right) I_{2m}\right]} + \frac{|\dot{\theta}|}{I_o} > \quad (44)$$

$$0.014 + 45.541 = 45.555\ (\text{rad/sec}/A)$$

Let us denote the acceleration in equation (41) by

$$\left|\frac{d|\dot{\theta}|}{dt}\right| = 45.555 \times 70.64 = 3218\ (\text{rad/sec}^2)$$

$$= 30729 \text{ rpm/sec},$$

from equation (41) the following equation can be derivated out.

$$\frac{|I_o - I_o^*|}{T} = \quad (D)$$

$$\frac{45.555}{\frac{r_s^2}{l_m\left[l_m I_o|\dot{\theta}| + \left(\frac{l_m}{l_r} r_r + r_s\right) I_{2m}\right]} + \frac{|\dot{\theta}|}{I_o}} \times 70.64$$

From equations (D) and (44) we can obtain a relation

$$\frac{|I_o - I_o^*|}{T} < 70.64\ (A/\text{sec})$$

meansing that equation (43) always holds.

In other words, as long as the acceleration

$$\left|\frac{d|\dot{\theta}|}{dt}\right|$$

is less than 3218 rad/sec.^{2},

$$\frac{|I_o - I_o^*|}{T}$$

is always smaller than 70.64 A/sec. whereby equation (43) holds and hence also equation (37) holds, thus making α in equation (36) to be equal to 10 V. Since, in usual applications, acceleration scarcely exceeds 3218 rad./sec.=30729 rpm/sec., where the constants of the induction motor are shown by equation (42), the embodiment 3 can utilize the full rating of the inducation motor.

Where a suitable α is determined as above described, in embodiment 3, the motor speed $|\dot{\theta}|$ is firstly detected and when $|\dot{\theta}|$ is less than the base speed $\dot{\theta}_B$, the exciting current I_o is maintained at a constant value I_{oB}, whereas $|\dot{\theta}|$ is larger than $\dot{\theta}_B$ current I_o is determined according to equation (36). With the constants shown in equation (42), the first term $(r_sI_o)^2$ of the left hand side of equation (36) becomes a maximum when $I_o=I_{oB}=7.4$ A, which is equal to $(0.368\times7.4)^2=7.4$. However, since this value is much smaller than the righthand term

$$\frac{4}{3}E^2 - \alpha^2 = \frac{4}{3}\times 141^2 - 10^2 = 26408$$

of equation (36), where the constants are given by equation (42), equation (36) can be simplified as follows by neglecting the first term $(r_sI_o)^2$.

$$l_mI_o|\dot{\theta}| = \sqrt{\frac{4}{3}E^2 - \alpha^2} - \left(\frac{l_m}{l_r}r_r + r_s\right) I_{2m} \tag{45}$$

However, in an application where r_s is large (for example, where a series resistance is inserted between the primary of the induction motor and the power amplifiers for smoothly controlling the exciting current I_o near $\phi=0$ by varying the voltage) it is necessary to determine I_o more accurately with equation (36).

An equation for calculating current I_o for a speed $|\theta|$ can be derived out as follows from equation (36).

$$(r_s^2 + l_m^2|\dot{\theta}|^2)I_o^2 + 2l_m\left(\frac{l_m}{l_r}r_r + r_s\right) I_{2m}|\dot{\theta}|I_o + \tag{46'}$$

-continued

$$\left(\frac{l_m}{l_r}r_r + r_s\right)^2 I_{2m}^2 + \alpha^2 - \frac{4}{3}E^2 = 0$$

Hence

$$I_o = \frac{1}{r_s^2 + l_m^2|\dot{\theta}|^2}\times\left[-l_m\left(\frac{l_m}{l_r}r_r + r_s\right) I_{2m}|\dot{\theta}|\right] + \sqrt{\left[l_m\left(\frac{l_m}{l_r}r_r + r_s\right) I_{2m}|\dot{\theta}|^2\right] + [r_s^2 + l_m^2|\dot{\theta}|^2]\left[\frac{4}{3}E^2 - \left(\frac{l_m}{l_r}r_r + r_s\right)^2 I_{2m}^2 - \alpha^2\right]} \tag{46}$$

Since in this embodiment, E, I_{2m} and α are such that

$$\frac{4}{3}E^2 - \left(\frac{l_m}{l_r}r_r + r_s\right)^2 I_{2m} - \alpha^2$$

would be positive, the current I_o obtained with equation (46) would not be always a real number.

Curve **80** shown in FIG. **13** shows a relationship between the motor speed $|\dot{\theta}|$ and the exciting current I_o calculated according to equation (46) when the constants of the motor are given by equation (42). It will be noted that curve **80** is substantially equal to that inversely proportional to equation (45). The detail of embodiment 3 will be described with reference to FIG. **14**, which is identical to the previous embodiments 1 and 2 except a block **81** acting as a computor.

In this embodiment **3** too, each time a sampling pulse SP having a period of T=1/1000 sec. is received, a program control unit **100** sequentially executes the following programs for steps 1 to 8.

More particularly, as the program for step 1 is executed, the computor **81** writes the count

$$\frac{8192}{2\pi}\theta$$

of the reversible counter **7** and multiplies this data with a coefficient $2\pi/8192$ with a coefficient applicator **107** to form data θ.

Then, the program of step 2 is executed to differentiate data θ by a differentiator **108** to obtain data $\dot{\theta}$. Then, the program of step 3 is executed to obtain the absolute value $|\dot{\theta}|$ of $\dot{\theta}$ by an absolute value calculator **109**, and an I_o calculator **110** calculates I_o based on $|\dot{\theta}|$. Thus, the I_o calculator **110** calculates I_o from $|\dot{\theta}|$ according to equation (46) described above for producing I_o obtained by equation (46) as the output data I_o of the I_o calculator **110** when I_o is smaller than a constant value I_{oB}, whereas the I_o is larger than the constant value I_{oB} the constant value I_{oB} is produced as the output data I_o of the I_o calculator **110**.

Then, the program of step 4 is executed and a digital data I_2' produced by a current data instructor **51** is written into the computor **81** to form rotor current data I_2 with its value limited to $\pm I_{2m}$ by a limiter **106**, the limit I_{2m} corresponding to the constant I_{2m} in equation (36).

Then, the program of step 5 is executed in which current I_2 obtained by step 4 is divided by current I_o obtained by step 3 in a divider **111** to form data I_2/I_o

which is multiplied with a coefficient r_r/l_r in a coefficient applicator **112** to form data

$$\frac{r_r}{l_r}\ \frac{I_2}{I_o}.$$

Then, the program of step 6 is executed to integrate data

$$\frac{r_r}{l_r}\ \frac{I_2}{I_o}$$

obtained by step 5 with an integrator **113** to obtain data $\phi-\theta$. Thus, an equation

$$\phi-\theta=\int\frac{r_r}{l_r}\ \frac{I_2}{I_o}\,dt$$

in equation (20) is calculated. This data $\phi-\theta$ is added to the data θ obtained in step 1 with an adder **85** to form data ϕ which corresponds to the flux angle ϕ in the voltage equation (32).

Then, the program of step 7 is executed in which a trigonometric function generator **99** calculates trigonometric functions cos ϕ, sin ϕ,

$$\cos\left(\phi-\frac{2\pi}{3}\right),\ \sin\left(\phi-\frac{2\pi}{3}\right)$$

based on the flux angle ϕ obtained in step 6.

Then, the program of step 8 is executed in which data I_o obtained in step 3 is differentiated with a differentiator **114** to obtain data dI_o/dt which can be calculated by an equation

$$\frac{dI_o}{dt}=\frac{I_o-I_o^*}{T}$$

where I_o^* represents the current obtained at the time of previous sampling. The data dI_o/dt is multiplied with a coefficient

$$\left(l_m+l_r\frac{r_s}{r_r}\right)$$

in a coefficient applicator **117** to form data

$$\left(l_m+l_r\frac{r_s}{r_r}\right)\frac{dI_o}{dt}.$$

Then, the program of step 9 is executed in which data I_o obtained in step 3 is multiplied with a coefficient r_s in a coefficient applicator **118** to form data r_sI_o which is added to data

$$\left(l_m+l_r\frac{r_s}{r_r}\right)\frac{dI_o}{dt}$$

obtained in step 8 with an adder **87** to form data

$$r_sI_o+\left(l_m+l_r\frac{r_s}{r_r}\right)\frac{dI_o}{dt}$$

which corresponds to the amplitude value of the cosine function in the first term on the righthand side of the voltage equation (32).

Then, the program of step 10 is executed in which data θ obtained in step 2 is added to data

$$\frac{r_r}{l_r}\ \frac{I_2}{I_o}$$

in an adder **86** to obtain data $\dot{\phi}$. Thus,

$$\dot{\phi}=\dot{\theta}+\frac{r_r}{l_r}\ \frac{I_2}{I_o}$$

in equation (33) is calculated.

Data $\dot{\phi}$ is multiplied with data I_o obtained in step 3 in a multiplier **101** to form data $l_mI_o\dot{\phi}$.

Then, the program of step 11 is executed in which data I_2 obtained in step 4 is multiplied with a coefficient r_s in a coefficient applicator **116** to form data r_sI_2 which is added to data $l_MI_o\dot{\phi}$ obtained in step 10 in an adder **88** to obtain data $l_mI_o\dot{\phi}+r_sI_2$ which represents the amplitude value of the sine function in the second term on the righthand side of the voltage equation (32).

Then, the program of step 12 is executed in which functions cos ϕ, sin ϕ,

$$\cos\left(\phi-\frac{2\pi}{3}\right),\ \sin\left(\phi-\frac{2\pi}{3}\right),\ \text{data } r_sI_o+\left(l_m+l_r\frac{r_s}{r_r}\right)\frac{dI_o}{dt}$$

and $l_mI_o\dot{\phi}+r_sI_2$ obtained in step 11 are used to process V_a-V_N and V_b-V_N in equation (32) in the following manner by using multipliers **102, 103, 104** and **105** and subtractors **89** and **90**.

$$\left.\begin{aligned}V_a-V_N&=\left[r_sI_o+\left(l_m+l_r\frac{r_s}{r_r}\right)\frac{dI_o}{dt}\right]\cos\phi-(l_mI_o\phi+r_sI_2)\sin\phi\\V_b-V_N&=\left[r_sI_o+\left(l_m+l_r\frac{r_s}{r_r}\right)\frac{dI_o}{dt}\right]\cos\left(\phi-\frac{2\pi}{3}\right)-(l_mI_o\phi+r_sI_2)\sin\left(\phi-\frac{2\pi}{3}\right)\end{aligned}\right\}\quad(47)$$

Then, the program of step 13 is executed in which V_a-V_N and V_b-V_N obtained in step 12 are respectively multiplied with a constant coefficient 2048/E in coefficient applicators **119** and **120** to obtain data V_a^* and V_b^* which are subtracted with each other in an adder **91** to form $V_C=-(V_a+V_b^*)$. In this embodiment 3, the amplitude value

$$\sqrt{\left[r_s I_o + \left(l_m + l_r \frac{r_s}{r_r}\right) \frac{dI_o}{dt}\right]^2 + [l_m I_o \phi + r_s I_2]^2}$$

of $V_a - V_N$, $V_b - V_N$ and $V_c - V_N$ in equation (32) is always limited to be less than

$$\frac{2}{\sqrt{3}} E$$

so that these data V_a^*, V_b^* and V_c^* lie in a range of from

$$-\frac{2}{\sqrt{3}} \times 2048 \text{ to } +\frac{2}{\sqrt{3}} \times 2047.$$

Then, the program of step 14 is executed and the same processing is made as has been described in connection with the embodiment 2 so as to calculate the output data V_a', V_b', and V_c' of the computer **81**. As has already been described in embodiment 2, these output data always lie in a range of from −2048 to +2047 and are written into the 3 pairs of 12 bit holding registers **39**A, **39**B and **39**C respectively in the PWM circuit **38** shown in embodiment 1.

In the foregoing, the process of calculating the voltage values in the voltage equations (32) with the computor **81** shown in FIG. **14** has been described.

EMBODIMENT 4

(Speed control)

Since in the embodiments 1 and 2, the exciting current I_o was held constant, the output torque T_e of the induction motor is precisely proportional to the instructed torque I_2, as can be noted from equation (17). Thus, when the torque control device utilized in embodiments 1 and 2 is applied to a speed control device the control system operates on the principle of a linear automatic control, thus enabling to realize a quick response speed control system intended by a designer.

FIG. **15** shows a detail of one example of the speed control apparatus. In this embodiment too, the construction of the apparatus is identical to that of the embodiment shown in FIG. **16** except a computor **128** and a speed instructor **129**. Each time a sampling pulse SP generated by a sampling pulse generator **8** at a period of T=1/1000 sec. is applied to the computor **128**, a program control unit **141** sequentially executes the programs of steps 1 to 3 to be described hereinafter.

At first when the program of step 1 is executed, the count

$$\frac{8192}{2\pi}\theta$$

of the reversible counter **7** is written into the computor **128** and this data is differentiated by a differentiator **132** to obtain an output data

$$\frac{8192}{2\pi}\dot{\theta}$$

which is calculated according to the following equation.

$$\frac{2192}{2\pi}\dot{\theta} = \frac{1}{T}\left\{\left[\frac{8192}{2\pi}\theta\right] - \left[\frac{8192}{2\pi}\theta\right]^*\right\} \quad (48)$$

where

$$\frac{8192}{2\pi}\theta$$

represents the count of the reversible counter **7** at a given sampling time and

$$\left[\frac{8192}{2\pi}\theta\right]^*$$

that of one period before. However, since the capacity of the reversible counter **7** is only two step 13 bits in this example, its count

$$\frac{8192}{2\pi}\theta$$

corresponds to one of 0 to 8191. More particularly as the motor rotates in the forward direction and θ increases from zero, the count of the counter **7** also increases from 0 and reaches 8191 at a point a little smaller than $\theta = 2\pi$ rad. (one revolution of the motor) at which the count of the counter **7** returns again to zero. Thus, as θ increases beyond $\theta = 2\pi$ radians the count of the counter increases again from 0. In other words, the count of the counter digitally represents the angle of rotation θ of the motor in less than one revolution, but the content of the count during the second and the succeeding revolutions is the same as that in the first revolution. For this reason, the result of calculation of equation (47) is not accurate in certain cases. For example, when the position θ of the rotor at the time of previous sampling is

$$\frac{2\pi}{8192}$$

(8000) radians and when that of the given sampling time is

$$\frac{2\pi}{8192}$$

(8200) radians, the count of the counter **7** at the time of the previous sampling would be

$$\left[\frac{8192}{2\pi}\theta\right]^* = 8000,$$

whereas that of the given time would be

$$\left[\frac{8192}{2\pi}\theta\right] = 8200 - 8192 = 8.$$

When this value is substituted into equation (17) the result would be

$$\frac{8192}{2\pi}\dot{\theta} = \frac{1}{T}[8 - 8000]$$

which means that the speed

$$\frac{8192}{2\pi}\dot{\theta}$$

is negative irrespective of the fact that θ is increasing in the positive direction. If the maximum variation of θ during one period T=1/1000 sec. were less than $\pm\pi$ rad. when the result of calculation of the term

$$\left[\frac{8192}{2\pi}\theta\right] - \left[\frac{8192}{\pi}\theta\right]^*$$

lies in a range of from −4090 to +4095, the result is correct, and other results are not correct. Accordingly, when the speed data

$$\frac{8192}{2\pi}\dot{\theta}$$

is calculated according to the following equations the results are correct.

$$\left.\begin{array}{l}
\text{(1) When } -4096 \leqq \left[\frac{8192}{2\pi}\theta\right] - \left[\frac{8192}{2\pi}\theta\right]^* \leqq +4095, \\
\frac{8192}{2\pi}\dot{\theta} = \frac{1}{T}\left\{\left[\frac{8192}{2\pi}\theta\right] - \left[\frac{8192}{2\pi}\theta\right]^*\right\} \\
\text{(2) When } \left[\frac{8192}{2\pi}\theta\right] - \left[\frac{8192}{2\pi}\theta\right]^* < -4096, \\
\frac{8192}{2\pi}\dot{\theta} = \frac{1}{T}\left\{\left[\frac{8192}{2\pi}\theta\right] - \left[\frac{8192}{2\pi}\theta\right]^* + 8192\right\} \\
\text{(3) When } +4095 < \left[\frac{8192}{2\pi}\theta\right] - \left[\frac{8192}{2\pi}\theta\right]^*, \\
\frac{8192}{2\pi}\dot{\theta} = \frac{1}{T}\left\{\left[\frac{8192}{2\pi}\theta\right] - \left[\frac{8192}{2\pi}\theta\right]^* - 8192\right\}
\end{array}\right\} \quad (49)$$

By using equations (49) correct speed data

$$\frac{8192}{2\pi}\dot{\theta}$$

can be obtained with differentiator **132** thus obtaining data proportional to the actual speed $\dot{\theta}$ (rad./sec.) of the motor **5**.

Then, the program of step 2 is executed in which a data R from the speed instructor **129** is written into the computer **128**, the data R being subtracted by a correct feedback data

$$\frac{8192}{2\pi}\dot{\theta}$$

obtained in step 1 in subtractor **136** to produce a speed error data VE. The speed error data VE is multiplied by a constant coefficient K by a coefficient applicator **131**. In this case, data I_o* applied to the other input of the coefficient applicator **131** is not used. The data I_2 is applied to a block **130** which is identical to block **10** shown in FIG. **6** of embodiment 1 or computer **69** shown in FIG. **12** of the embodiment 2. Thus, in FIG. **15** data I_2 applied to block **130** corresponds to the torque data I_2 shown in FIG. **6** and FIG. **12** and data

$$\left[\frac{8192}{2\pi}\theta\right]$$

applied to the other input terminal **135** corresponds to the count

$$\frac{8192}{2\pi}\theta$$

of the reversible counter shown in FIG. **6** or the count $8192/2\pi$ of the reversible counter shown in FIG. **12**.

Then, when the program control unit **141** executes the step 3 of the program, the block **130** performs the same calculation as that described in embodiment 1 or 2. Thus, the block **130** calculates the motor control voltage data based on the torque data I_2 and the count

$$\frac{8192}{2\pi}\theta$$

of the reversible counter and applies the calculated motor control voltage data to the PWM circuit **38**. In this manner, the induction motor **5** produces a torque T_e precisely proportional to data I_2 applied to the computer.

In FIG. **15**, where the instructed speed data R is larger than the actual motor speed data

$$\frac{8192}{2\pi}\dot{\theta},$$

the speed error VE is positive and the motor **5** produces a torque T_e proportional to VE. Thus, the motor accelerates and its actual speed is fed back to the control apparatus to make zero the speed error VE. In this manner, a speed control system based on the linear automatic control theory can be provided in which the speed is controlled such that the amount of feedback

$$\frac{8192}{2\pi}\dot{\theta}$$

proportional to the motor speed will coincide with the instructed speed data R.

The torque control system of the third embodiment in which the exciting current I_o is decreased when the motor speed increases beyond the base speed $\dot{\theta}_B$ is also applied to the speed control system shown in FIG. **15**. In this case, the construction of block **130** shown in FIG. **15** is identical to that of the computer **81** of the torque control system of the third embodiment shown in FIG. **14**. Thus, the data I_2 applied to block **130** corresponds to data I_2' applied to block **81** shown in FIG. **14**, data

$$\frac{8192}{2\pi}\theta$$

to

$$\frac{8192}{2\pi}\theta$$

shown in FIG. **14**, and the outputs of the block **130** correspond to V_a', V_b' and V_c' shown in FIG. **14**.

In embodiment 3, the output torque T_e of the motor shown in FIG. **15** is shown by

$$T_e = K_T \frac{l_m^2}{l_r} I_o I_2$$

as shown by equation (17). Assuming that the coefficient applied by coefficient applicator **131** shown in FIG. **15** is a constant K, then $I_2 = KV_E$ and the output torque of the induction motor becomes

$$T_e = K_T \frac{l_m^2}{l_r} I_o K V_E.$$

Since the open loop gain G of the speed control system is determined by T_e/V_E when I_o decreases at a speed higher than the base speed $\dot{\theta}_B$ the gain decreases as expressed by an equation

$$G = T_e/V_E = -\frac{K_T \frac{l_m^2}{l_r} I_o K V_E}{V_E} = K K_T \frac{l_m^2}{l_r} I_o$$

whereby the response speed of the automatic control system decreases at speeds above the base speed $\dot{\theta}_B$.

For this reason, the coefficient K applied by the coefficient applicator **131** is changed in accordance with data I_o^*. More particularly, K is made to be equal to K_o/I_o where K_o is a constant and I_o^* represents a calculated value of I_o calculated by the I_o calculator **110** shown in embodiment 3 at a previous sampling time. I_o^* is applied to an input terminal **144** of the coefficient applicator **131** via a dotted line conductor **140** to change K to K_o/I_o^*.

In this manner, the open loop gain

$$G = K K_T \frac{l_m^2}{l_r} I_o = K_o K_T \frac{l_m^2}{l_r} \frac{I_o}{I_o^*}$$

becomes a constant value, because I_o^* one sampling time before and I_o at the present time are substantially equal. Thus, at any motor speed $\dot{\theta}$ the gain is constant and the response speed does not decrease.

In this embodiment, it was described that the torque control system of the embodiments 1, 2 and 3 can be used for the speed control. However, it should be understood that the invention is not limited to speed control but is also applicable to position control as will be described hereunder.

EMBODIMENT 5

(position control device)

FIG. **16** is a block diagram showing one example of the position control device in which block **145** designates a computor. A position instructor **146** applies a position instruction PSN to the computor **145**. Where a digital control system is employed, the position instructor **146** may be incorporated into the computor in which case the position instructor **146** is constructed to produce a linear or an arcuate function in the computor **145**.

In the circuit shown in FIG. **16**, circuit elements other than the computor **145** and the data instructor **146** are identical to those of the speed control system of the embodiment 4.

Each time a sampling pulse SP is applied to the computor **145** from a sampling pulse generator **8** at a period of 1/1000 second the program control unit **151** executes the programs of steps 1 to 6 in the following manner.

At first, when the program of step 1 is executed, the computor **145** takes in the count

$$\left[\frac{8192}{2\pi}\theta\right]$$

of the reversible counter **7** to temporarily store it in a buffer register **159**. However, as has been described in connection with embodiment 4, the content

$$\left[\frac{8192}{2\pi}\theta\right]$$

represents the rotation angle θ in less than one revolution in terms of digital quantities, the count of the second and the succeeding revolutions are the same as that of the first revolution. Accordingly, in order to cause an accumulating register **156** to produce a position data output

$$\frac{8192}{2\pi}\theta$$

which accurately represents the rotational angle θ of the motor during any revolutions the following procedures are performed.

Thus, as the program control unit **151** performs the program of step 2, a subtractor **157** produces an output A by performing calculations according to the following equations based on the content of a register **158** storing the content

$$\left[\frac{8192}{2\pi}\theta\right]^*$$

of a buffer register **159**.

$$\left.\begin{array}{l}
\text{(1) When } -4096 \leqq \left[\frac{8192}{2\pi}\theta\right] - \left[\frac{8192}{2\pi}\theta\right]^* \leqq +4095, \\
\quad A = \left[\frac{8192}{2\pi}\theta\right] - \left[\frac{8192}{2\pi}\theta\right]^* \\
\text{(2) When } \left[\frac{8192}{2\pi}\theta\right] - \left[\frac{8192}{2\pi}\theta\right]^* < -4096 \\
\quad A = \left[\frac{8192}{2\pi}\theta\right] - \left[\frac{8192}{2\pi}\theta\right]^* + 8192 \\
\text{(3) When } 4095 < \left[\frac{8192}{2\pi}\theta\right] - \left[\frac{8192}{2\pi}\theta\right]^* \\
\quad A = \left[\frac{8192}{2\pi}\theta\right] - \left[\frac{8192}{2\pi}\right]^* - 8192
\end{array}\right\} \quad (50)$$

Then, the program of step 3 is executed in which data A obtained in step 2 is added to the content

$$\frac{8192}{2\pi}\theta$$

of the accumulation register **156** at the previous sampling time, thus forming a new content

$$\frac{8192}{2\pi}\theta$$

at the new sampling point. This valve shows an accumulated value of the motor positions, thus showing the actual angular position of the rotor of the motor. The accumulation register **156** has been cleared to zero when a power source switch, not shown, is closed and since the capacity of the register **156** is sufficiently large enough to cover the maximum position of the variation of the rotor angular position of the motor the register **156** can accumulate position data corresponding to all angular positions at a ratio of 1:1.

Then the program of step 4 is executed in which the content of the buffer register **159** accumulated in step 1 is transferred to register **158**. The content thereof is used as the previous content,

$$\left[\frac{8192}{2\pi}\theta\right]^*$$

of the reversible counter **7** at the time of the next sampling.

Then the program of the step 5 is executed in which a position instruction digital quantity PSN is applied to the computer **145** from the position instructor **146** of the position control device, the instructed quantity PSN being subtracted by feedback data

$$\frac{8192}{2\pi}\theta$$

obtained in step 3 in a subtractor **155** to produce a position error data PE, which is multiplied with a constant coefficient KP in the coefficient applicator **152**. This data R is applied to a block **150** in the computer **145**, having the same construction as the processor **128** of the speed control system of embodiment 4.

Then the program of the step 6 is executed by the program control unit in which the processor **150** performes the same calculation as has been described in connection with the speed control of embodiment 4 so as to calculate the motor control voltage data based on data R and the data

$$\frac{8192}{2\pi}\theta$$

of the reversible counter, the motor control voltage data being supplied to the PWM circuit **38**. As has been described in connection with the embodiment 4 the speed data

$$\frac{8192}{2\pi}\dot{\theta}$$

is controlled such that it will coincide with data R applied to block **150**.

In the circuit shown in FIG. **16**, when the instructed position data PSN is larger than the actual motor position data

$$\frac{8192}{2\pi}\theta$$

the position error PE is positive and the motor rotates with a positive speed whereby the motor position data

$$\frac{8192}{2\pi}\theta$$

increases in the positive direction to provide a feedback which reduces the position error PE to zero. In this manner, the angular position of the motor is controlled such that its position data

$$\frac{8192}{2\pi}\theta$$

coincides with the instructed position data PSN.

I claim:

1. A torque control system of an induction motor having m phase stator windings and P poles, comprising means for producing a predetermined torque instruction, and means responsive to said torque instruction for generating and applying a phase n voltage V_{ns} expressed by the following equation to the stator windings of said induction motor to cause it to produce a torque corresponding to said torque instruction,

$$V_{ns} = r_s I_o \cos\left(\phi - \frac{2(n-1)}{m}\pi\right) - \left(l_m I_o \frac{d\phi}{dt} + r_s I_2\right)\sin\left(\phi - \frac{2(n-1)}{m}\pi\right)$$

where

$$\phi = \frac{P}{2}\theta + \frac{r_r}{l_r I_o}\int I_2 dt \text{ (radian)},$$

m: number of phases equal to 2 or more,
n: 1, 2, . . . m,
p: number of poles of the induction motor,
I_o: constant exciting current of the stator windings (ampere),
r_s, r_r, l_r and l_m: constants inherent to the induction motor,
θ: rotor rotating angle (radian) of the induction motor, and
I_2: instructed rotor current (ampere) corresponding to the torque instruction.

2. A torque control system of an induction motor having m phase stator windings and P poles, comprising means for producing a predetermined torque instruction, means responsive to said torque instruction for generating and applying a phase n voltage V_{ns} expressed by the following equation (1) to the stator windings of said induction motor to cause it to generate a torque corresponding to said torque instruction

$$V_{ns} = \sqrt{(r_s I_o)^2 + \left(l_m I_o \frac{d\phi}{dt} + r_s I_2\right)^2} \cos\left(\phi - \frac{2(n-1)}{m}\pi\right) \quad (1)$$

and means for controlling a term V_o in the following equation (2) so as to make said phase voltage V_n to be equal to a permissible maximum value when said phase voltage exceeds said permissible maximum value,

$$V_{ns} = \quad (2)$$

$$I_{oN} = \frac{1}{r_s^2 + l_m^2\left(\frac{d\theta}{dt}\right)^2} \times \left[-l_m\left(\frac{l_m}{l_r} r_r + r_s\right) I_{2m}\left|\frac{d\theta}{dt}\right| + \sqrt{\left\{ l_m\left(\frac{l_m}{l_r} r_r + r_s\right) I_{2m}\frac{d\theta}{dt}\right\}^2 + \left\{ r_s^2 + l_m^2\left(\frac{d\theta}{dt}\right)^2\right\}\left\{E^2 - \left(\frac{l_m}{l_r} r_r + r_s\right)^2 I_{2m}^2 - \alpha^2\right\}}\right],$$

$$\sqrt{(r_s I_o)^2 + \left(l_m I_o \frac{d\phi}{dt} + r_s I_2\right)^2} \cos\left(\phi - \frac{2(n-1)}{m}\pi\right) + V_o$$

where

$$\phi = \frac{P}{2}\theta + \frac{r_r}{l_r I_o}\int I_2 dt \text{ (radians)},$$

I_o: constant exciting current (ampere) of the stator windings,

r_s, r_r, l_r and l_m: constants inherent to the induction motor,

θ: rotor rotating angle (radians) of the induction motor, and

I_2: instructed rotor current (ampere) corresponding to the torque instruction.

3. A torque control system of an induction motor having m phase stator windings and P poles, comprising means for producing a predetermined torque instruction, and means responsive to said torque instruction for generating and applying a phase n voltage V_{ns} expressed by the following equation to the stator windings of said induction motor to cause it to produce a torque corresponding to said torque instruction,

$$V_{ns} = \sqrt{\left(r_s I_o + \left(l_m + l_r\frac{r_s}{r_r}\right)\frac{dI_o}{dt}\right)^2 + \left(l_m I_o \frac{d\phi}{dt} + r_s I_2\right)^2} \cos\left(\phi - \frac{2(n-1)}{m}\pi\right) \quad (1)$$

and means for controlling V_o in the following equation (2) so as to make said phase voltage to be equal to a permissible maximum value when said phase voltage exceeds said permissible maximum value,

$$V_{ns} = \sqrt{\left(r_s I_o + \left(l_m + l_r\frac{r_s}{r_r}\right)\frac{dI_o}{dt}\right)^2 + \left(l_m I_o \frac{d\phi}{dt} + r_s I_2\right)^2} \cos\left(\phi - \frac{2(n-1)}{m}\pi\right) + V_o \quad (2)$$

$V_{ns} =$

$$\left(r_s I_o + \left(l_m + l_r\frac{r_s}{r_r}\right)\frac{dI_o}{dt}\right) \cos\left(\phi - \frac{2(n-1)}{m}\pi\right) -$$

-continued

$$\left(l_m I_o \frac{d\phi}{dt} + r_s I_2\right) \sin\left(\phi - \frac{2(n-1)}{m}\pi\right)$$

where

$$\phi = \frac{P}{2}\theta + \frac{r_r}{l_r}\int \frac{I_2}{I_o} dt,$$

$I_o = I_{oB}$ when $I_{oB} \leqq I_{oN}$,
$I_o = I_{oN}$ when $I_{oB} > I_{oN}$,
I_{oB}: constant base exciting current (ampere),

r_s, r_r, l_r and l_m: constants inherent to the induction motor,

θ: rotor rotating angle (radian) of the induction motor,

I_{2m}: maximum rotor current (ampere),

E: maximumm permissible voltage (volt) of the stator voltage generating means,

α: constant (volt),

$$I_2 = \frac{l_r}{K_T l_m^2 I_o} T_e \text{ (ampere), and}$$

K_T: constant.

4. A torque control system of an induction motor having m phase stator windings and P poles, comprising means for producing a predetermined torque instruction, means responsive to said torque instruction for generating and applying a phase n voltage V_{ns} expressed by the following equation to the stator windings of said induction motor to cause it to produce a torque T_e corresponding to said torque instruction

$$V_{ns} = \sqrt{\left(r_s I_o + \left(l_m + l_r\frac{r_s}{r_r}\right)\frac{dI_o}{dt}\right)^2 + \left(l_m I_o \frac{d\phi}{dt} + r_s I_2\right)^2} \cos\left(\phi - \frac{2(n-1)}{m}\pi\right) \quad (1)$$

and means for controlling V_o in the following equation (2) so as to make said phase voltage to be equal to a permissible maximum value when said phase voltage exceeds said permissible maximum value,

$$V_{ns} = \sqrt{\left(r_s I_o + \left(l_m + l_r\frac{r_s}{r_r}\right)\frac{dI_o}{dt}\right)^2 + \left(l_m I_o \frac{d\phi}{dt} + r_s I_2\right)^2} \cos\left(\phi - \frac{2(n-1)}{m}\pi\right) + V_o \quad (2)$$

where

$$\phi = \frac{P}{2}\theta + \frac{r_r}{l_r}\int \frac{I_2}{I_o}\,dt \text{ (radian)},$$

I_o: variable exciting current (ampere) and
$I_o = I_{oB}$ when $I_{oB} \leqq I_{oN}$
$I_o = i_{oN}$ when $I_{oB} > I_{oN}$,
I_{oB}: constant base exciting current (ampere),

$$I_{oN} = \frac{1}{r_s^2 + l_m^2\left(\frac{d\theta}{dt}\right)^2} \times \left[-l_m\left(\frac{l_m}{l_r} r_r + r_s\right) I_{2m}\left|\frac{d\theta}{dt}\right| + \sqrt{\left\{ l_m\left(\frac{l_m}{l_r} r_r + r_s\right) I_{2m}\frac{d\theta}{dt}\right\}^2 + \left\{ r_s^2 + l_m^2\left(\frac{d\theta}{dt}\right)^2\right\}\left\{\frac{4}{3}E^2 - \left(\frac{l_m}{l_r} r_r + r_s\right)^2 I_{2m} - \alpha^2\right\}}\right],$$

r_s, r_r, l_r and l_m: constants inherent to the induction motor,
θ: rotor rotational angle (radian) of the induction motor,
I_{2m}: maximum rotor current (ampere),
E: permissible maximum value of V_{ns} (volt),
α: constant (voltage),

$$I_2: \frac{l_r}{K_T l_m^2 I_o} T_e, \text{ and}$$

K_T: constant.

5. The apparatus according to claim **1**, **2**, **3** or **4** which further comprises means for producing a speed instruction, and speed control means for rendering said torque T_e produced by said motor to correspond to a speed error obtained by subtracting an actual speed of said motor from said speed instruction so as to control the actual speed of said induction motor to be equal to said speed instruction.

6. The apparatus according to claim **5** which further comprises means for producing a position instruction which operates to make said speed instruction to correspond to a position error obtained by subtracting an actual rotor position of said induction motor from said position instruction so as to make equal the rotor position to said position instruction.

7. The apparatus according to claim **1**, **2**, **3** or **4** which further comprises a position instruction which operates to make said torque produced by said induction motor to correspond to a position error obtained by subtracting an actual rotor position of said induction motor from said position instruction so as to make equal the rotor position equal to said position instruction.

* * * * *