United States Patent [19]

Williams

[11] **4,195,717**

[45] **Apr. 1, 1980**

[54] **CLUTCH AND BRAKE MECHANISM**

[75] Inventor: **James R. Williams,** Martinsville, Ind.

[73] Assignee: **General Motors Corporation,** Detroit, Mich.

[21] Appl. No.: **864,856**

[22] Filed: **Dec. 27, 1977**

[51] **Int. Cl.**[2] **F16D 67/04;** F16D 25/08

[52] **U.S. Cl.** ..... **192/18 A;** 192/85 CA; 188/170

[58] **Field of Search** ..... 192/18 A, 85 CA; 416/169; 192/12 C, 15, 16; 188/170

[56] **References Cited**

U.S. PATENT DOCUMENTS

3,182,528	5/1965	Lamburn	192/18 A
3,305,054	2/1967	Liszewski et al.	192/18 A
3,638,773	2/1972	Lewis et al.	192/18 A
3,679,033	7/1972	Wagner	416/169
3,696,898	10/1972	Sommer	192/18 A
3,971,461	7/1976	Conroy et al.	192/18 A

FOREIGN PATENT DOCUMENTS

329495	4/1958	Fed. Rep. of Germany	192/18 A
852648	10/1960	United Kingdom	192/18 A

Primary Examiner—Leslie Braun
Assistant Examiner—David C. Reichard
Attorney, Agent, or Firm—John C. Evans

[57] **ABSTRACT**

A combination clutch and brake unit for an engine driven lift fan propeller system controls power transfer from an engine to a propeller assembly and includes a clutch selectively operated by a hydraulic piston between engaged and disengaged positions to couple a drive input to a drive output and wherein a carriage for a hydraulic piston in a clutch supports a movable brake component and shifts it with respect to a fixed reaction brake member to brake the output shaft of the device to prevent free wheeling of the lift fan propeller when it is decoupled from the engine and wherein the clutch piston is biased into its decoupled position by return springs that also maintain the brake components in an engaged positon when the clutch is decoupled.

2 Claims, 3 Drawing Figures

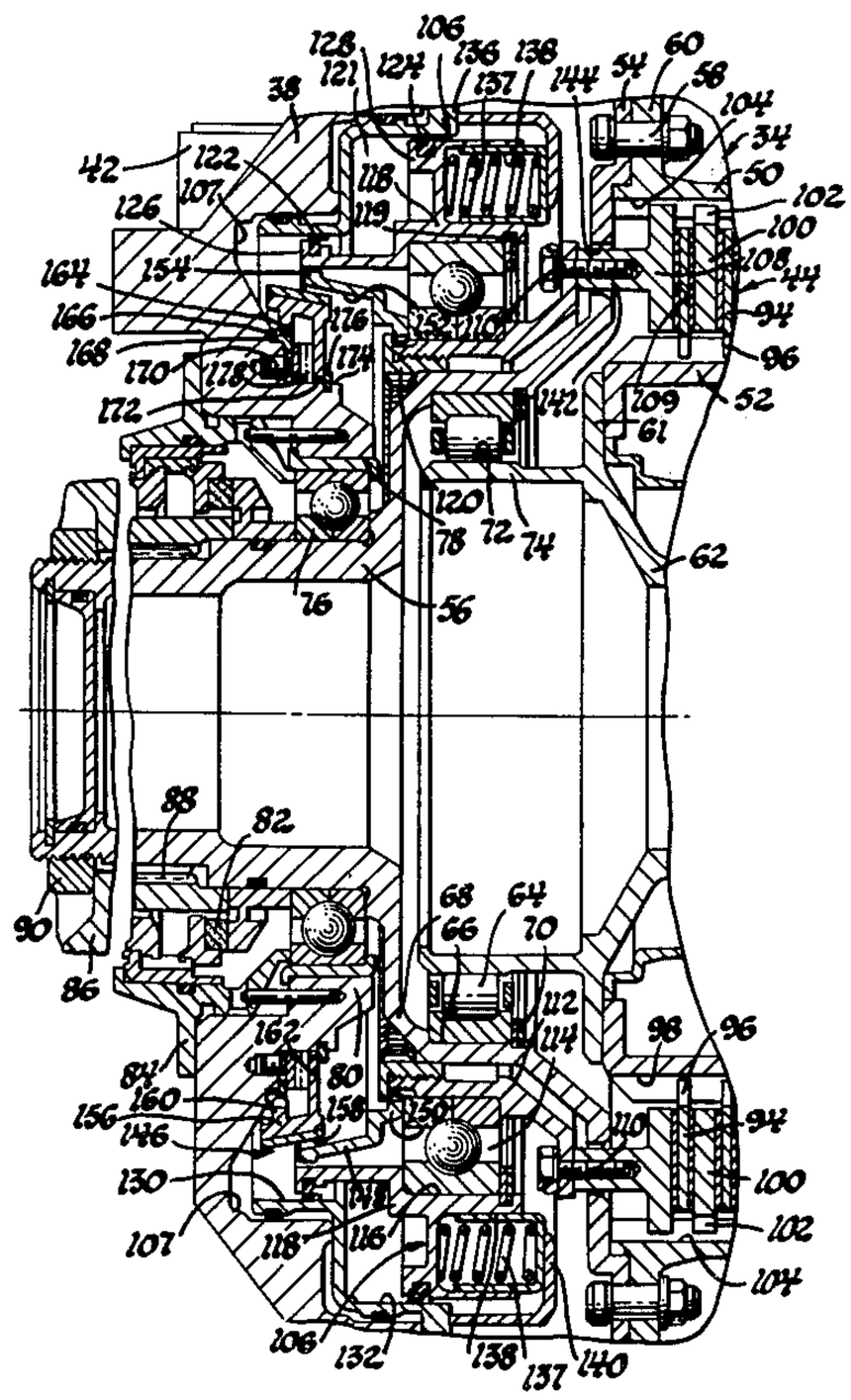

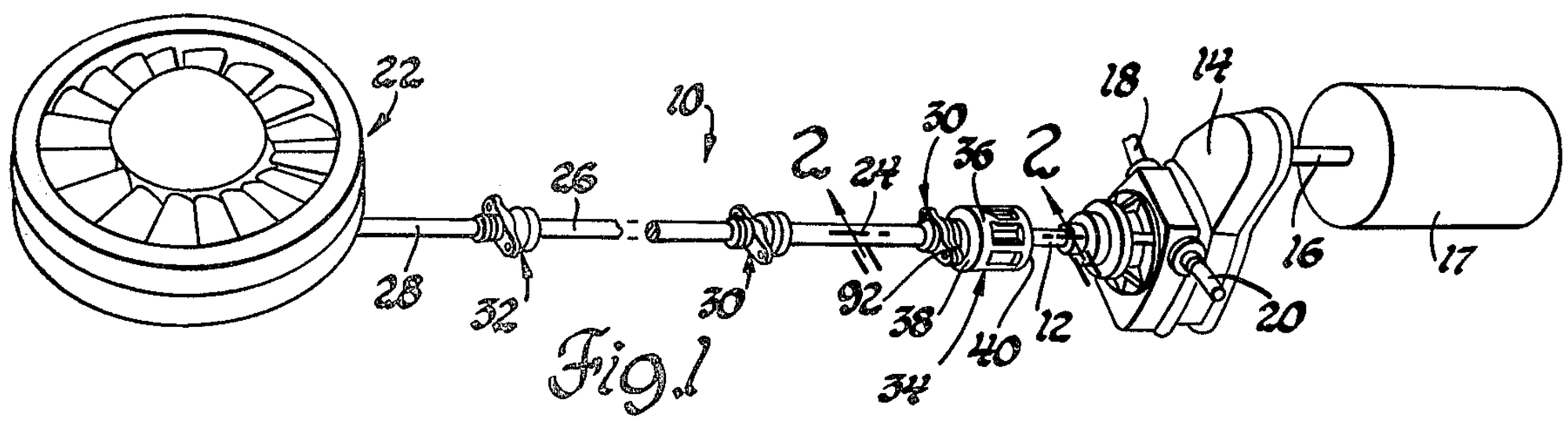

Fig. 1

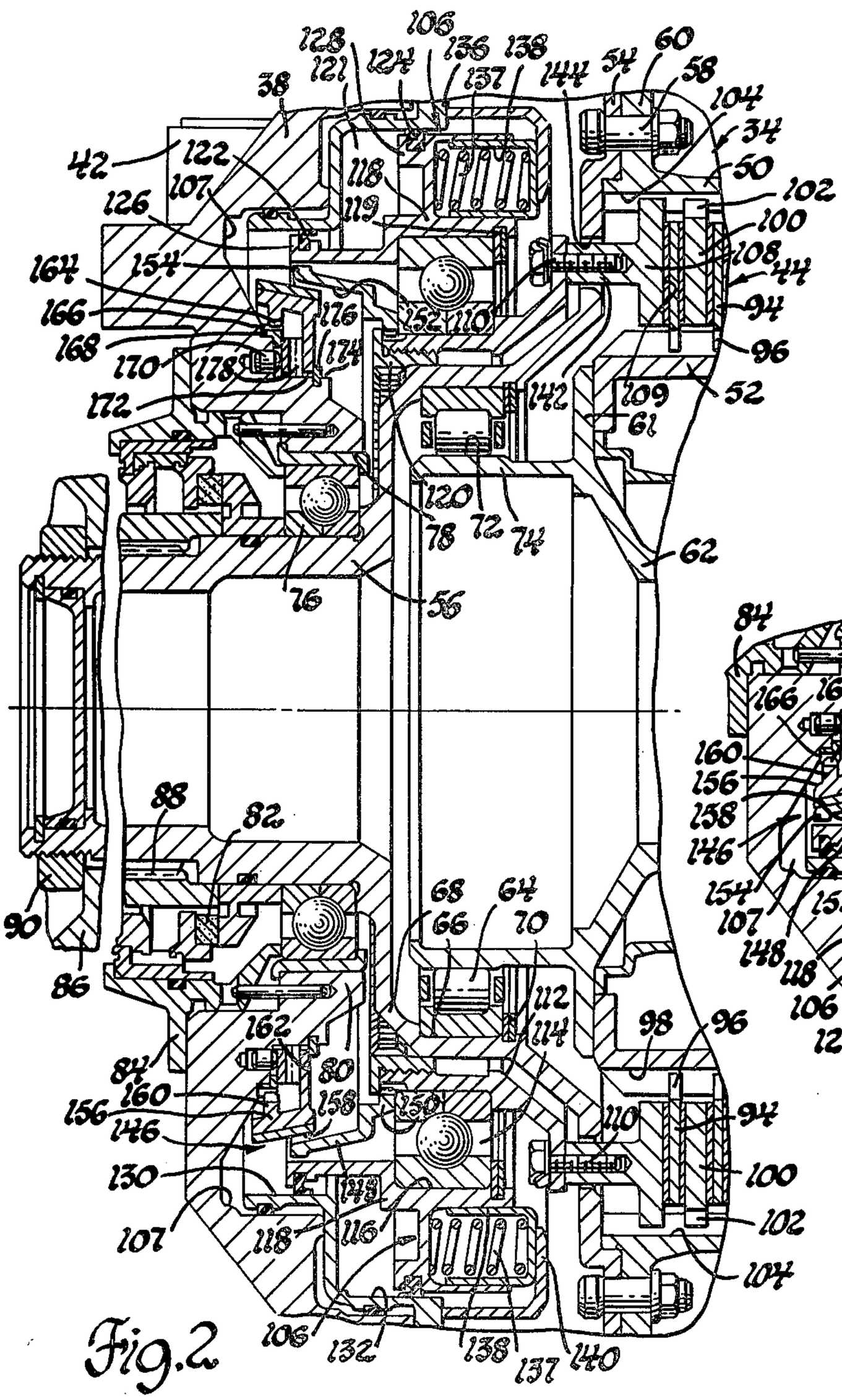

Fig. 2

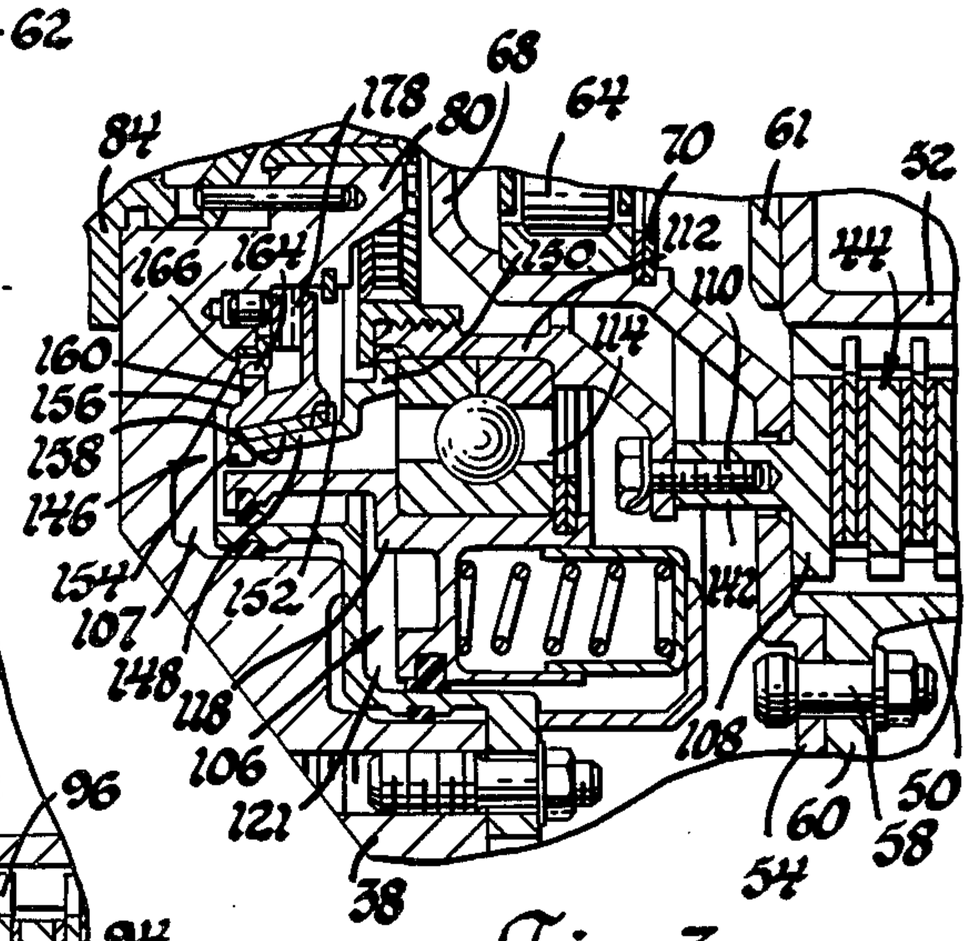

Fig. 3

CLUTCH AND BRAKE MECHANISM

This invention relates to propeller drive systems and more particularly to fan lift and propeller drive systems including a hydraulically operated clutch operating piston and including a brake for preventing fan free wheel and resultant rotation of a decoupled clutch output shaft.

In vertical takeoff and landing aircraft, clutch devices of unitary configuration are utilized to selectively connect a gas turbine engine to a fan or propeller unit during a lift mode of operation. Such clutch devices are characterized by having a hydraulically operated piston therein which exerts a clamp-up pressure on friction plates within the unitary clutch assembly to affect rotation of the output shaft in response to input shaft operation on operator demand. In such arrangements, the hydraulically operated piston is maintained energized until input and output clutch members are mechanically interconnected during the drive mode of operation.

A specific example of such a drive and lift system is set forth in copending U.S. application, Ser. No. 853,178, now U.S. Pat. No. 4,157,135, filed Nov. 21, 1977. In this arrangement, an engine drive shaft is coupled to the input of a clutch assembly between a combiner box of the drive system and a forward or nose fan unit that is used during a vertical take-off mode of aircraft operation. The clutch is a self-contained unit operable to transmit in excess of 11,000 hp at full fan drive speed and includes friction drive discs therein operated by a hydraulic piston control into an engaged phase of operation until a lock mechanism is operated upon synchronous speed of operation between the input and the output of the clutch.

In such arrangements it is desirable to prevent free wheeling of the fan propeller assembly and clutch output drive when the clutch is decoupled.

Accordingly, an object of the present invention is to provide an improved combination brake and clutch assembly including means compactly arranged within a clutch housing to brake the output shaft of the clutch to prevent its drive by a free wheeling propeller of a fan lift assembly when there is no power transfer thereto from an associated drive engine for the fan lift unit.

Another object of the present invention is to provide an improved clutch and brake unit having self-contained components within a single housing located directly within a drive line between a power source and a variable pitch, lift fan unit and including an outer clutch member and an inner clutch member connected respectively to an output shaft and an input shaft; each having clutch friction plate secured thereto; and further including a hydraulically operated piston at one end of the housing operable to pressure the clutch plates together in response to operator demand and wherein the hydraulically operated piston includes return springs for locating the piston in a deenergized position when the clutch is disengaged; the piston for energizing the clutch having a movable brake component secured thereto for axial movement with respect to a reaction brake component secured to the housing at one end thereof outboard of the hydraulic piston; the piston positioning the movable brake component in a disengage position when the clutch is engaged and the return springs biasing the movable brake component into braking relationship with the reaction brake component when the clutch is disengaged to produce a brake action on the clutch output shaft so as to prevent its drive by free wheeling of a fan or propeller component of the variable pitch lift fan unit.

Further objects and advantages of the present invention will be apparent from the following description, reference being had to the accompanying drawings wherein a preferred embodiment of the present invention is clearly shown.

FIG. **1** is a view in perspective of a mechanical drive for a lift fan including the clutch and brake assembly of the present invention;

FIG. **2** is a fragmentary, enlarged, longitudinal section view taken along the line **2—2** of FIG. **1** looking in the direction of the arrows with brake and clutch components of the present invention in a first operative position wherein power is transferred from a source to a fan lift unit; and

FIG. **3** is a fragmentary, enlarged sectional view of the clutch and brake components of FIG. **2** in a second operative position wherein the fan lift unit is decoupled from the power source and a fan component is braked to prevent free wheeling.

Referring now to the drawings in FIG. **1**, a drive system **10** is illustrated including an input shaft **12** adapted to be connected to the output from a combiner gear box **14** having an input shaft **16** thereto connected to a gas turbine engine **17**. The combiner gear box **14** includes side output shafts **18, 20** that are directed laterally therefrom to interconnect main power propulsion units for power transfer thereto from the gear box.

Such a mechanical drive system is suitable for use in lift cruise type propulsion systems wherein the main propulsion engines are operated during a forward thrust phase of operation and power transfer can be directed therefrom to an auxiliary variable pitch propeller type lift fan unit **22**. More particularly, in the illustrated arrangement the lift fan unit **22** is connected by a plurality of shaft segments **24, 26** and **28** and interconnected couplings **30, 32** to transfer power from the gear box under control of a self-contained, light weight combined brake and clutch unit **34**.

The lift fan unit **22** may, for example, be a front located fan unit operable during vertical take-off and landing modes of an aircraft. In such arrangements, power is supplied from the combiner gear box and directed through the brake and clutch unit **34** to operate the fan during such modes at pilot demand. The brake and clutch unit **34** is operable to disconnect the fan unit **22** from the combiner gear box **14** during conventional flight modes of operation where the main propulsion engines are used to drive the aircraft and to concurrently brake the fan unit.

In accordance with certain principles, the brake and clutch unit **34** includes an outer case **36** having end plates **38, 40** to define a modular assembly that has unusual compactness and is adapted for an in-line drive train configuration of the type set forth in FIG. **1**. The brake and clutch unit **34** is operable to transmit up to 11,000 HP at fan drive speeds of between 8,000 and 10,000 RPM.

The brake and clutch unit **34** is under the control of a clutch pressure valve **42** mounted on the end plate **38**. It is also under the control of a lock system more specifically set forth in copending U.S. patent application Ser. No. 853,178, now U.S. Pat. No. 4,157,135, filed Nov. 21, 1977.

More particularly, the brake and clutch unit **34** includes an internal oil cooled disc type clutch **44** having

an outer clutch member **50** and an inner clutch member **52** in the form of telescoped tubular members. The other clutch member **50** is connected to a radially outwardly directed large diameter open end **54** of an output shaft **56** by a plurality of circumferentially located nut and bolt elements **58** each of which are secured to a radially outwardly directed flange **60** of the outer clutch member **50**. The inner clutch member **52** is fixedly secured to an intermediate flange segment **61** formed on the inboard end of a tubular, open ended input shaft **62**.

The input shaft **62** is rotatably supported by a roller bearing assembly **64** that is supportingly received within an internally located circumferentially grooved surface **66** on the radial flange **68** of the output shaft **56**. The bearing assembly **64** is held in place by a snap ring **70** seated in a locking groove on the flange **68** and assembly **64** supportingly receives the outer surface **72** of an inboard stub **74** of the shaft **62**. The output shaft **56** is supportingly received by a bearing assembly **76** located in a bearing support bore **78** formed in an inboard flared nose **80** of the end plate **38**. The bearing assembly **76** is associated with a face type carbon seal assembly **82** supported on the front end of the end plate **38** by means of an annular seal assembly support plate **84**. The output flange **86** is connected by means of a splined couple **88** to the outer surface of the shaft **56** and is held in place thereon by means of a shaft ring nut **90**.

In the illustrated arrangement, the output flange **86** has a radially outwardly directed segment **92** thereon that is adapted to be connected to ears of one of the couplings **30** as shown in FIG. **1** whereby the output of the brake and clutch unit **34** will be directed to the lift fan unit **22**. In the aforesaid arrangement, the inner clutch member **52** is connected to flange **61** and thereby is rotated relative to the outer clutch member **50** and the relative speed therebetween is dependent upon the amount of engagement between a first plurality of axially spaced friction clutch plates **94** that have a plurality of radially inwardly located fastener tabs **96** fixedly secured to the inner clutch member **52** at axial grooves **98** therein. Interleaved between each of the clutch plates **94** are a second plurality of axially spaced clutch discs **100** having tab ends **102** thereon fixedly secured to the outer clutch member **50** at axial grooves **104** therein.

A clutch piston operator mechanism **106** in cavity **107** of end plate **38** includes an annular piston pressure applicator **108** with an annular flat face **109** thereon in engagement with the leftmost one of the plurality of spaced clutch plates **94** as shown in FIG. **2**. The piston pressure applicator **108** is connected by means of screws **110** to a carriage **112** that is rotatably mounted by means of a bearing assembly **114** in a bearing bore **116** of a hydraulic piston **118**. A split retainer ring **119** holds bearing assembly in place at its outer race. Inner race of bearing assembly **114** is retained by a threaded ring **120** on carriage **112**. A pressurizable chamber **121** in communication with the outlet of valve **42** is sealed at opposite ends thereof by means of annular seals **122, 124** supportingly received within an outboard grooved end **126** and intermediate grooved wall **128** of the piston **118**. The seals **122, 124** are slidably sealingly located for reciprocation with respect to step bores **130, 132** formed on a stepped cylinder **134** that is press fit within the cavity **107** and and is secured therein by means of a bracket **136**. The piston **118** is biased to the left as shown in FIG. **1** by a plurality of return springs **137** that are located in inboard recesses **138** of the piston **118** so that each of the springs **137** is biased between it and a radially inwardly dependent flange **140** of bracket **136** for the cylinder **134**.

Each applicator **108** has a stem **142** directed through an opening **144** in a radially outwardly inboard end of carriage **112** so that operation of mechanism **106** will shift bearing assembly **114** axially of plate **38** and carriage **112** axially of the clutch **44**.

The brake and clutch unit **34** includes a brake assembly including a movable brake member **148** having an annular radial flange **150** thereon fixedly secured to the carriage **112** in juxtaposed relationship with the inner race of the bearing assembly **114**. The brake member **148** includes a radially outwardly divergent wear surface **152** with a peripheral tip **154** thereon. The brake assembly **146** further includes a rotatably fixed reaction brake member **156** having a generally conically configured outer peripheral wear surface **158** thereon that is located within the cavity **107** by a pair of dependent flanges **160, 162**, both of annular form. The outboard flange **160** includes a plurality of axial splines **164** on its distal end that mate with axial splines **166** of an L-shaped ring member **168** that is held in place by means of dowel pins **170** located at spaced circumferential points along one leg of the L-shaped ring and threadably secured to the end plate **38** to fix the L-shaped ring **168** in place with respect thereto. The inboard one of the flanges **162** has its distal end **172** supportingly guided by an annular guide surface **174** on the nose **80** of the outer end plate **38**. A split ring retainer **176** is connected to the guide surface **174** inboard of the distal end **172** to serve as an inboard stop for the reaction brake member **156**. The inboard flange **162** is biased against the ring retainer **176** by a wave spring **178** that is supported circumferentially of the guide surface **174**. The wave spring **178** will yieldingly control outboard axial movement of the reaction brake member **156** to smoothly mate the conically configured wear surface **158** to the wear surface **152** on the movable brake member **148** during the brake phase of operation.

In accordance with certain principles of the present invention, the brake assembly **146** is located in a compact relationship with respect to the clutch piston mechanism **106** to produce a combined clutch and brake operation within the confines of a readily accessible outboard location of the unitary brake and clutch unit **34**. Moreover, the movable brake member **148** is associated with the movable carriage **112** of the clutch piston mechanism **106** so as to be responsive to the spring action of the return springs **137** so that the spring force of the return springs **137** will maintain the movable brake member **148** in a biased braking relationship to the reaction brake member **156** during the braking mode of operation while serving the concurrent function of moving the hydraulic piston **118** into a release position when hydraulic pressure is removed from the chamber **121** during a clutch disengage phase of operation.

More particularly, operation of the improved combined brake and clutch unit **34** includes an initial energization step wherein hydraulic fluid is directed into the chamber **121** in accordance with operator demand at which point the piston **118** will move to the right as shown in FIG. **2** against the force of the return springs **137** to carry the carriage **112** and bearing assembly **114** thereon to the right so that the flat face **109** will cause the friction clutch plates **94** and clutch discs **100** to be pressured together to couple the input shaft **62** to the output shaft **56**. During this phase of operation, the

movable brake member **148** is maintained out of contact with the reaction member **156** of the brake assembly **146**.

The engaged location of the component parts of the combined brake and clutch unit **34** are set forth in FIG. 2. In this mode of operation, the reaction member **156** is maintained by the wave spring **178** to locate the inboard flange **162** against the reference surface defined by the spline ring retainer **176**. The conically configured wear surface **158** is thereby conditioned for a subsequent braking operation and moreover is located in spaced relationship to the wear surface **152** on the movable brake member **148** which is shifted into an axially spaced relationship with respect to the reaction member **156**. Power is transferred from the gear box **14** to the fan unit **22** to produce a lift effect therefrom during a vertical take-off phase of operation.

It is recognized that during other modes of aircraft operation it is desirable to brake the output shaft **56** so that there will be no rotation thereof when the fan unit **22** is decoupled from the power source.

More particularly, this is attained in the present invention by operation of the piston clutch mechanism **106** into a disengage position, again at pilot demand. Under this circumstance, hydraulic pressure is removed from the chamber **121** and the return springs **137** will accordingly force the piston **118**, bearing assembly **114** and carriage **112** to the left as shown in FIG. 3. Concurrently, the movable brake member **148** has its wear surface **152** moved axially against the wear surface **158** on the reaction brake member **156**. The wave spring **178** will compress to accommodate axial adjustment of the taper defined by wear surface **152** and wear surface **158** to assure positive full surface contact braking therebetween. The return springs **137** have a preselected rate that is sufficient to maintain an axial bias between the braking components to assure a resultant braking force sufficient to maintain the output shaft **56** locked against any tendency for free wheeling of the fan unit **22** to produce a reverse drive throughout from the output shaft **56** into the operative components of the disc type clutch **44**.

By virtue of the aforesaid arrangement a positive clutch action and brake control are provided by use of a common clutch piston carriage and return spring assembly which will produce clutch component disengagement while simultaneously producing brake engagement and wherein the movable brake component can be connected to existing clutch components without modification thereof and the reaction brake component can be connected axially of existing clutch components by a simple modification of an end case component of the clutch assembly.

While the embodiments of the present invention, as herein enclosed, constitute a preferred form, it is to be understood that other forms might be adopted.

The embodiments of the invention in which an exclusive property or privilege is claimed are defined as follows:

1. A clutch and brake unit for association with an engine driven lift fan assembly to control power transfer from the engine to the lift fan assembly comprising: an outer housing with an output end case, a drive input from the engine, a drive output to the lift fan assembly, clutch means coupled to said drive input and said drive output having a clutch applicator with a disengaged position and an engaged position to produce clutch slip upon initial power transfer from said drive input to said drive output to accelerate the drive output to a speed synchronized with that of said drive input, an inboard cavity within said output end case, means including a hydraulic operator within said inboard cavity and including a reciprocating piston selectively pressurized and connected by an axially movable thrust bearing and bearing carriage to the clutch applicator to position said clutch means in its engaged position, means including return springs outboard of said clutch applicator and in engagement with said piston for returning said piston when said operator is depressurized thereby to position said clutch means in its disengaged position, and a drive output brake located within said inboard cavity including a rotatable brake member secured to said drive output by said bearing carriage for rotation therewith, a nonrotatable reaction brake member secured to said end case radially inwardly of and axially positioned with respect to said rotatable brake member, said rotatable brake member being located radially inwardly of said piston and being axially movable by said piston out of engagement with said reaction brake member when said clutch means is engaged, means including said piston return spring for biasing said rotatable brake member into engagement with said reaction brake member when said operator is depressurized to brake said drive output when the clutch is disengaged thereby to prevent free wheeling of the fan lift assembly.

2. A clutch and brake unit for association with an engine driven lift fan assembly to control power transfer from the engine to the lift fan assembly comprising: an outer housing with an output end case, a drive input from the engine, a drive output to the lift fan assembly, clutch means with clutch plates coupled to said drive input and said drive output having a clutch applicator with a disengaged position and an engaged position to produce clutch slip upon initial power transfer from said drive input to said drive output to accelerate the drive output to a speed synchronized with that of said drive input, an inboard cavity with said output end case, means including a hydraulic operator within said inboard cavity and including a reciprocating piston selectively pressurized and connected by an axially movable thrust bearing and bearing carriage to the clutch applicator to position said clutch means in its engaged position, means including return springs outboard of said clutch applicator and in engagement with said piston for moving said piston axially away from said clutch plates when said operator is depressurized thereby to position said clutch means in its disengaged position, a bearing assembly having an inner and an outer race, said outer race axially connected to said piston for rotatably supporting said bearing within said piston, said carriage member for said bearing assembly axially fixed to the inner race of said bearing assembly to be carried therewith axially in response to positioning of said piston and rotatably by said drive output, a drive output brake located within said inboard cavity including a rotatable brake member secured to said carriage for rotation therewith, a nonrotatable reaction brake member secured to said output end case radially inwardly of and axially positioned with respect to said rotatable brake member, said rotatable brake member being located radially inwardly of said piston and axially movable by said carriage out of engagement with said reaction brake member when said clutch means is engaged, means including said piston return springs for biasing said rotatable brake member into engagement with said reaction brake member when said operator is depressurized to brake said drive output when the clutch is disengaged thereby to prevent free wheeling of the fan lift assembly.

* * * * *