United States Patent [19]

Bauer et al.

[11] **3,888,198**

[45] **June 10, 1975**

[54] **THREAD CUTTER DEVICE ON CHAIN STITCH SEWING MACHINE**

[75] Inventors: **Wilhelm Bauer**, Hauptstuhl; **Horst Stahlschmitt**, Kaisers Lautern, both of Germany

[73] Assignee: **Pfaff Industriemaschinen GmbH**, Kaiserslautern, Germany

[22] Filed: **May 16, 1974**

[21] Appl. No.: **470,543**

[30] **Foreign Application Priority Data**

May 19, 1973 Germany 2325564

[52] **U.S. Cl.** **112/252;** 112/197

[51] **Int. Cl.** **D05b 65/02**

[58] **Field of Search** 112/252, 197, 198, 201, 112/202

[56] **References Cited**

UNITED STATES PATENTS

2,163,994	6/1939	Fischer	112/252
2,345,943	4/1944	McCann	112/252
3,051,111	8/1962	Cortese et al.	112/252

Primary Examiner—H. Hampton Hunter
Attorney, Agent, or Firm—Frank L. Durr; Orville N. Greene

[57] **ABSTRACT**

The disclosure relates to an automatic cutting means which is attached to the looper means of a chain stitch sewing machine in such a way that the recoil involved in stopping the machine at the end of a predetermined group of sewing stitches operates to cut that leg of the thread loop which is adjacent to the goods just sewed.

3 Claims, 6 Drawing Figures

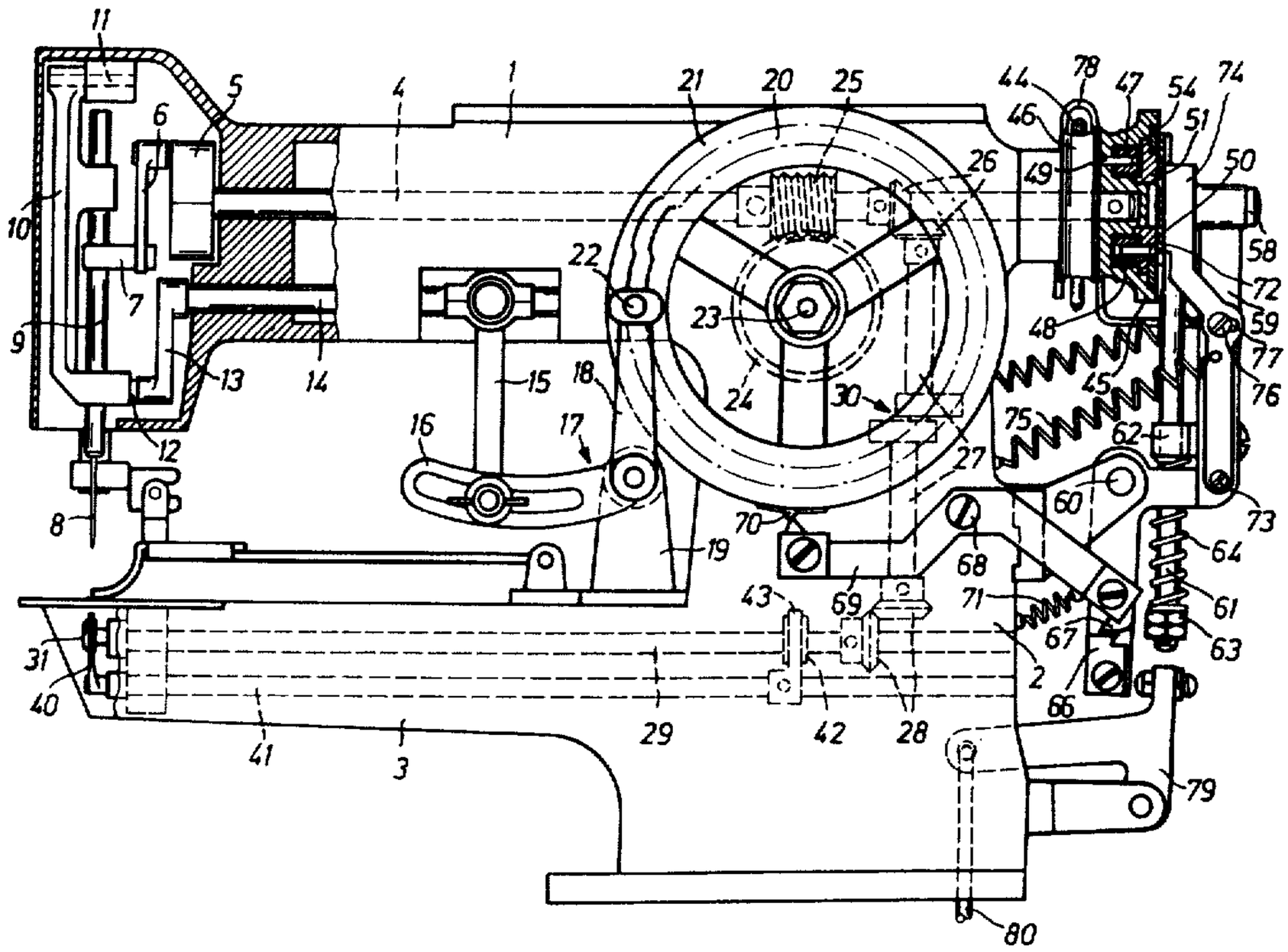

Fig. 1

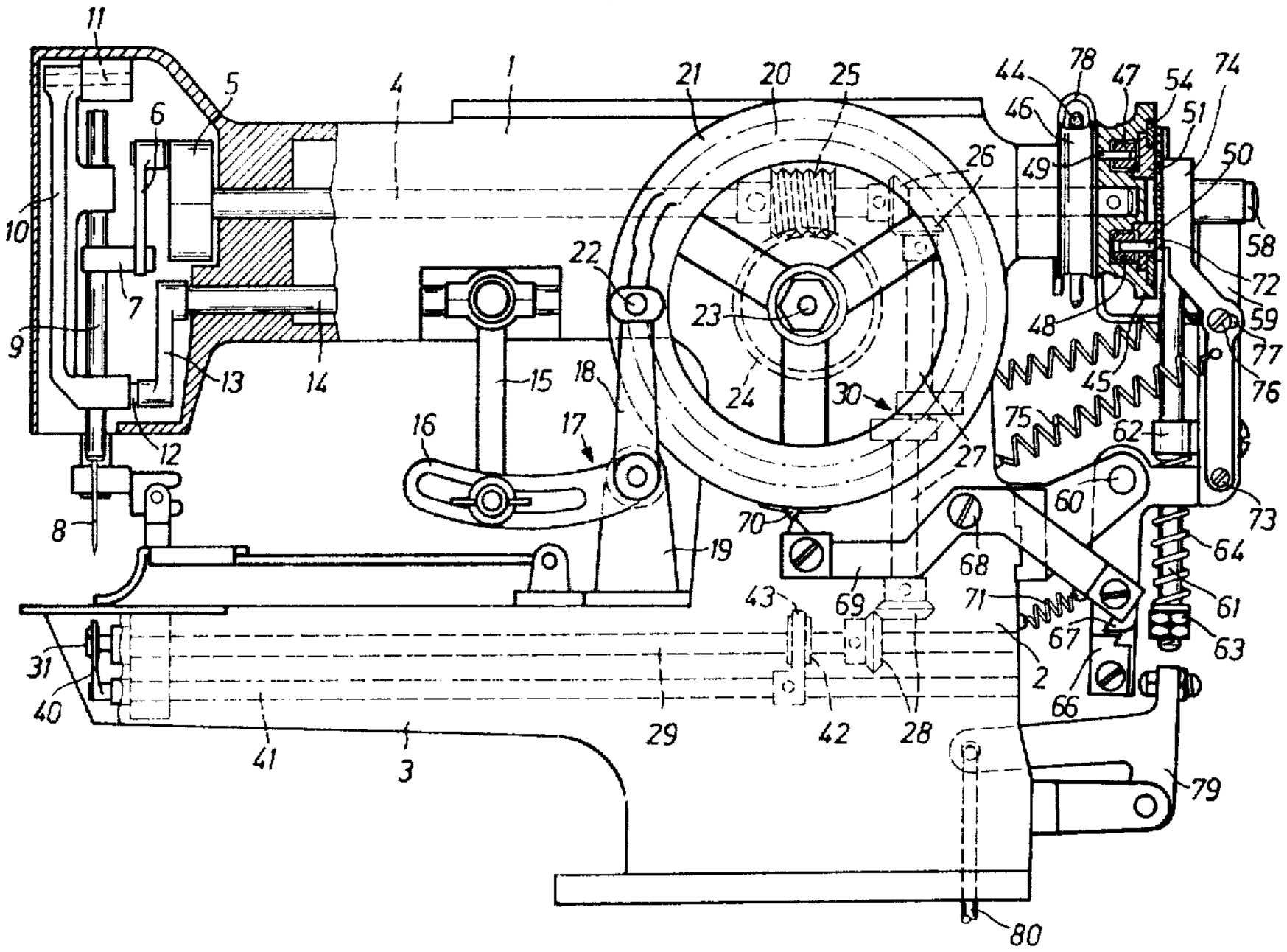
11
5
6
4
1
21
20
25
44
78
47
54
74
46
51
50
26
49
10
58
22
72
23
59
9
7
48
77
13
14
15
18
45
76
24
30
16
17
75
62
12
27
60
73
8
70
68
64
19
43
69
71
61
67
63
31
2
40
66
29
42
28
41
3
79
80

Fig. 2

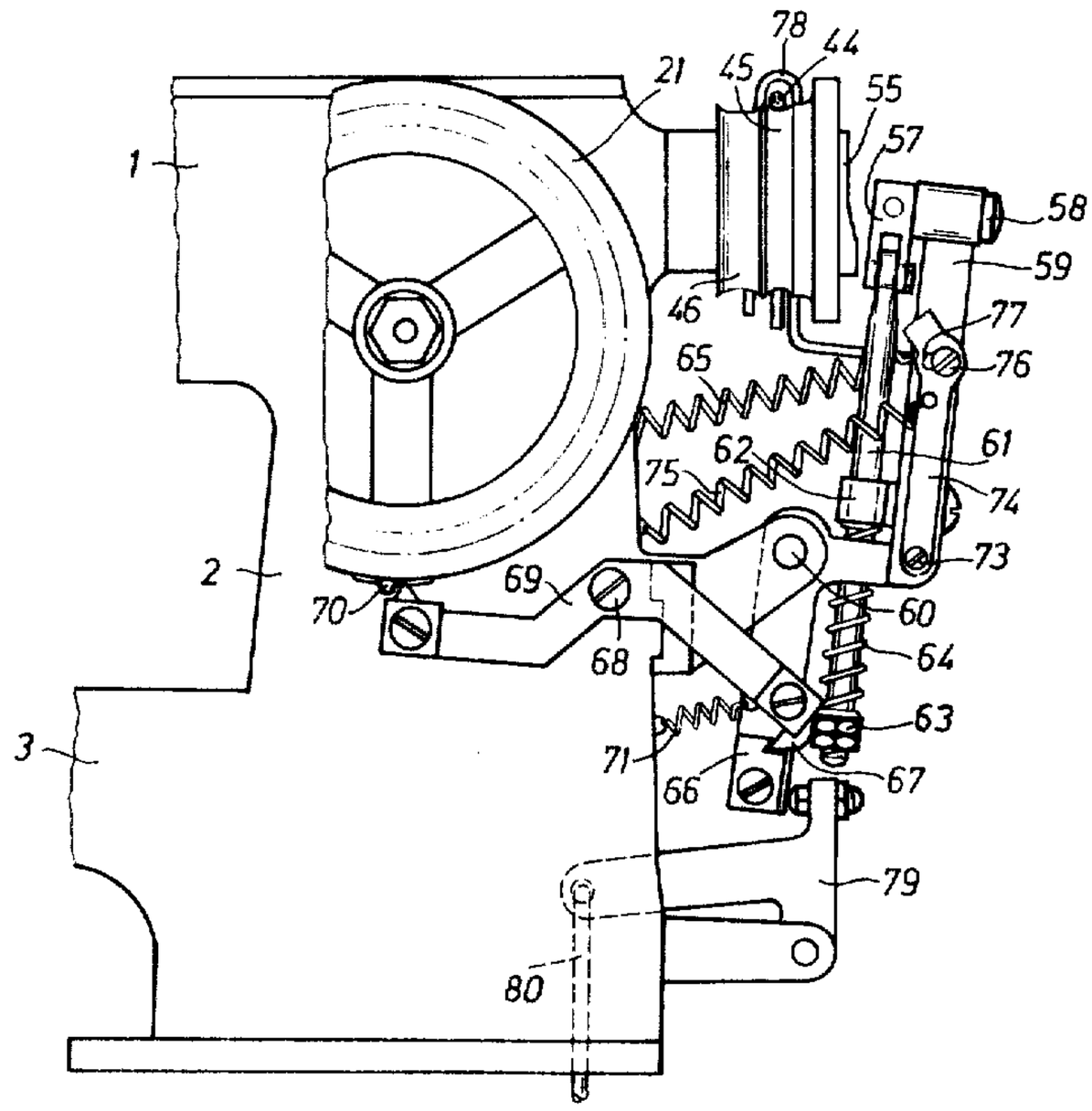
78
44
21
45
55
1
57
58
46
59
77
65
76
62
61
75
74
2
69
70
68
60
64
73
63
3
71
66
67
79
80

Fig. 3

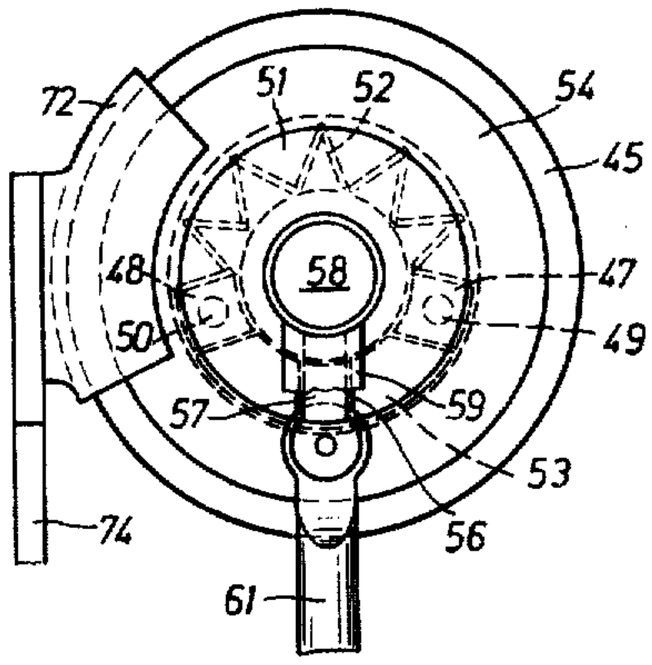

Fig. 4

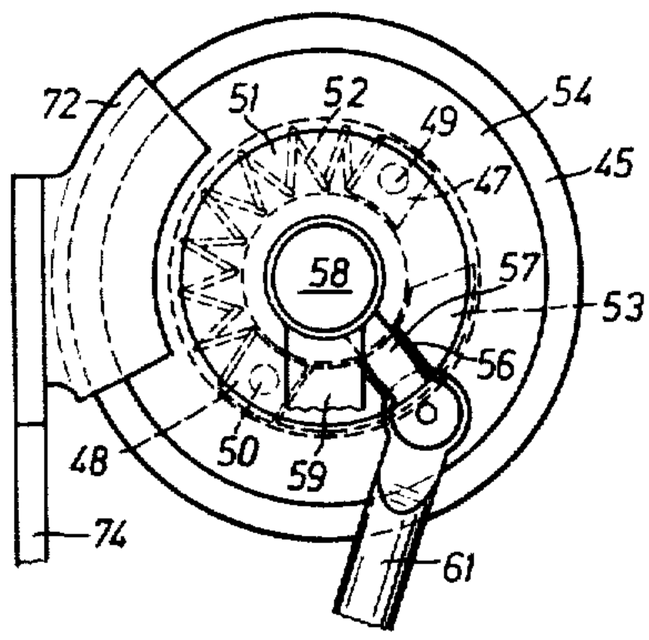

Fig. 5

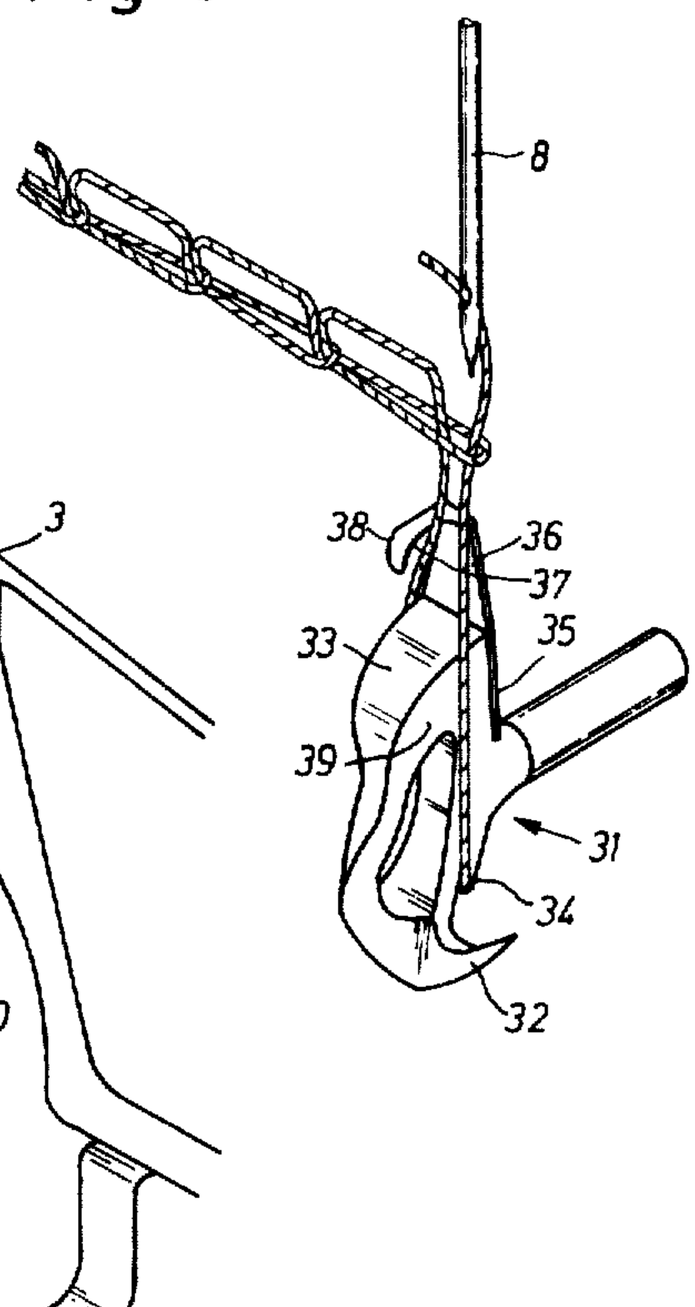

Fig. 6

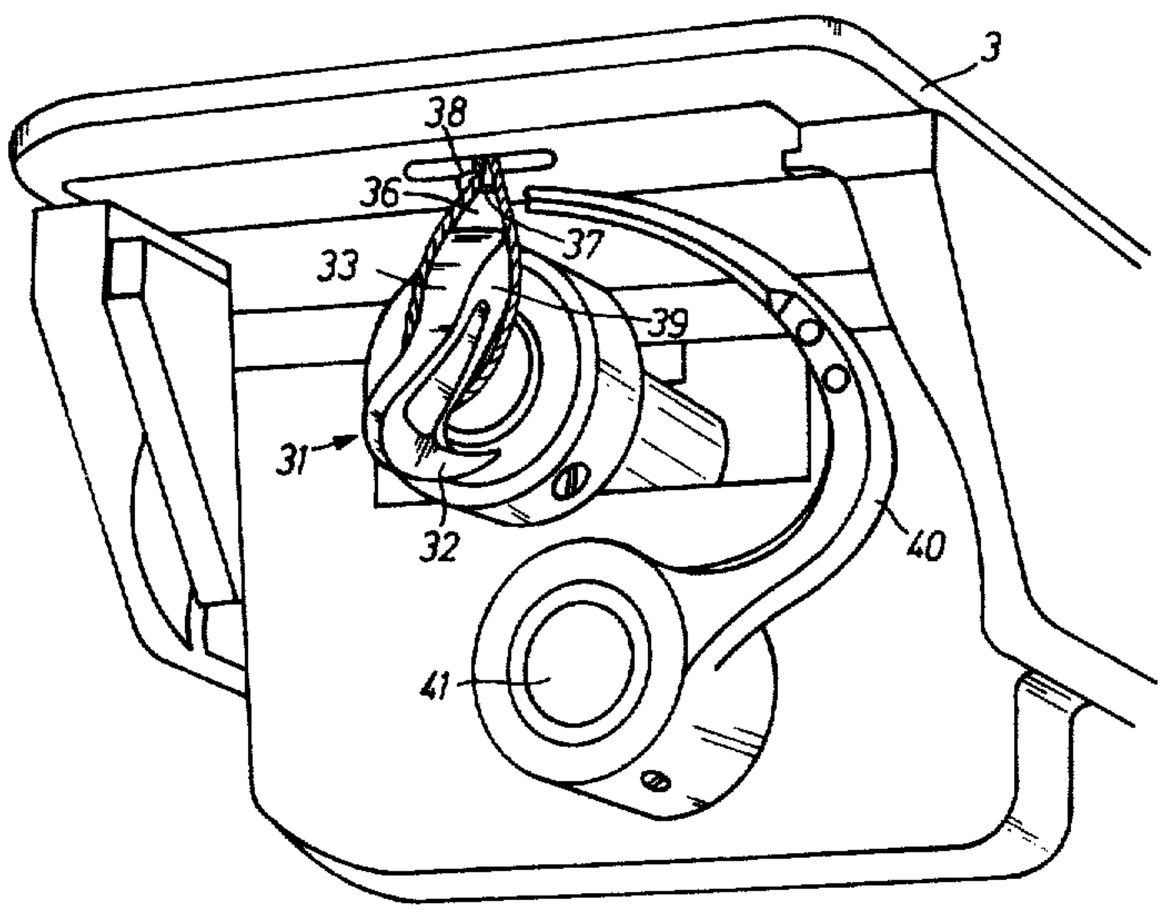

THREAD CUTTER DEVICE ON CHAIN STITCH SEWING MACHINE

The invention concerns a thread-cutting device on a chain stitch sewing machine of the type having a stopping arrangement for stopping the main shaft in a predetermined angular position, a rotating looper with a looper point and also a looper back and with it the needle thread-loop severing cutting blade.

It is known, in connection with single thread chain stitch sewing machines, to sever the thread loop above the looper upon stopping the main shaft of the machine and lifting the sewing goods or the sewing goods clamp. Since a uniform thread, as a rule, tears off in the area of a knot, there results, from this method, that the initial length of the thread end on the supply side is predestined to be proportionately short. The latter kind of thread severing can be carried out only with thread of inferior strength and on correspondingly stout sewing goods.

It has, to be sure, already been made also, thread loop arrangements for single thread chain stitch sewing machines by which a cutting knife for the thread is fastened directly to the auxillary looper. There, the auxillary looper carrying shaft is axially slidable and is shifted at the end of the sewing process to a supported position in front of the stitch structure. In this position, the cutting knife, fastened on the auxillary looper, comes in the range of the thread loop and severs the latter. Then, the auxillary looper must execute, in addition to this, a significantly greater oscillating movement in the opposite direction to its normal oscillating movement, requiring an additional operation for attaining a cutting movement. The latter must, after the stopping of the main shaft, be inserted to its predetermined position through the stopping arrangement, and again be disconnected after the ensuing cutting step. Since, in the course of the cutting step, neither the main shaft nor the looper shaft, restored to its original rotating direction, is allowed to be rotated, this drive must take place independently of the drive of the main drive shaft. Such arrangements require, in this way, a comparatively large construction expenditure.

An object of the invention is to provide a thread cutter arrangement for chain stitch sewing machines having a stopping device wherein the main shaft of the machine is stopped in a predetermined position, which at the end of each stitch forming cycle automatically severs the thread loop, which operates without making an inserted impulse or specific motion necessary.

The problem is solved according to the invention, in that the rotating looper is impelled, after the stopping process through the known recoil movement of the stopping means, to rotate opposite to its loop seizing direction, and the cutting knife is arranged with its cutter extending in the direction of the looper point above and spaced from the looper back.

While with a sewing machine equipped with a stopping arrangement, as for example, stitch-series sewing machines, the main shaft is, first of all, decelerated with the aid of a brake, from its normally operated speed, to a harmless speed for the effective operation of the repel cam. First then, the repel cam engages the arresting slot and will, on account of its spring arrangement, take off around a predetermined angular amount in the working direction of rotation of the main shaft. As soon as the oscillating movement of the machine shaft no longer

surpasses the force of the spring, the main shaft rotates back against the working direction of rotation a predetermined angular amount, corresponding to the tension of the spring produced recoil moment. This, by itself undesirable, but unavoidable, recoil of the main shaft, as well as the looper shaft, for attaining the greatest possible reduction in speed or rotation, is taken advantage of for severing the needle thread loop with the cooperation of a knife blade directly fastened to the looper. In this way, a completely automatic cutting process takes place at the end of each stich forming cycle and requires neither a constructive expenditure, nor an increase in the cycle time. Not only the conversion of the cutting tool to its working position, but also the cutting process itself, takes place in the proper stopping time of the main shaft.

When the new thread cutting device is operated, it is only that leg of the thread loop directly connected to the sewing goods that is severed, so that the remaining leg connecting the thread supply, retains a sufficient length for forming the united stitches of the following sewing cycle, so it is advisable that the cutting knife be so arranged that its cutting edge extends in a concave plane essentially parallel to the plane of the rotating looper, and with said edge facing the point of the looper and turning towards the boundary edge of the back of the looper.

A special construction of the cutting knife, which does not interfere with the normal stitching, according to a further feature of the invention, is that the side thereof which turns away from the looper point is constructed as a lead cam for that leg of the thread loop directed to the sewing goods.

The invention will be further explained in the following description of an embodiment thereof shown in the attached drawings.

In the drawing:

FIG. **1** is a front view of a chassis-stitch, stitch group sewing machine shown partly in section and with the stopping means in operating position.

FIG. **2** is a partial view of the machine of FIG. **1** with the stopping means in inoperative position.

FIG. **3** is a side view of the stopping means in inoperative position.

FIG. **4** is a side view of the stopping means after the snapping of the knock-off cam.

FIG. **5** is a perspective view, somewhat diagrammatic of the looper with the cutting knife.

FIG. **6** is a perspective view from below of the machine of FIG. **1**.

In the front view of FIG. **1**, the sewing machine has an arm **1**, supported on upright **2**, and a lower arm **3**. In arm **1**, the main drive shaft **4** is mounted to the forward end of which is connected the crank **5**, and a link **6** and a needle rod member **7** connects crank **5** to the needle rod **9**, containing the needle **8**.

The needle rod **9** is slidably received in frame **10** which is pivotally mounted in journal **11**, which is parallel to the main shaft **4**. On its lower end, the frame **10** is pivotally connected through journal **12** to crank **13**, which in turn is carried on an oscillating shaft **14**, parallel to main shaft **4**. The oscillating shaft **14** is connected by means of a ball pull rod **15** with the arm **16** of a double arm lever **17**, in order to attain the lateral movement for the needle rod **9**, the lever **17** being pivotally mounted in the bearing block **19**. The arm **18** of lever **17** carries, on its free end, a stud **22** engaging in the

central groove **20** of control wheel **21**. The control wheel **21** is mounted on housing fixed trunnion **23** and is driven by worm gear **24**, which meshes with screw gear **25** mounted on the main shaft **4**.

The main shaft **4** provides the driving connection for a two-part, trained, vertical shaft **27** through the pair of bevel gears **26**. The lower end of shaft **27** is connected through another pair of bevel gears **28**, in driving connection with the looper shaft **29**, running parallel to the main shaft **4**. The two parts of shaft **27** are connected to one another through a known type of crank drive **30**, so that the looper shaft **29** develops an irregular speed of movement.

On its forward end, the looper shaft **29**, carries the rotating chain stitch looper **31**, for cooperating with the needle **8**, which in the known way, comprises a loop pick-up point **32**, (FIG. **5**), as well as an opposed arranged looper back **33**.

The looper **31** is provided with a supplemental shoulder **34** for stabilizing of its point-siezed thread loop.

On the shaft-facing surface **35** of looper **31**, the cutting knife **36** is fastened, whose cutter **37** is arranged above the looper back. The cutter **37** is essentially parallel to the shaft **29** and is spaced at a fixed distance from back **33**. The cutter **37** is concavely curved and, for reasons to be further explained below, is situtated in the background a fixed amount with respect to the boundary surface **39** of the back **33** opposite the looper point **32**.

The turned away side of cutter **37** of cutting knife is, as is obvious from FIG. **5**, shaped to act as a lead cam for the needle thread loop. The knife **36** adversely affects neither the seizure of the thread loop, nor the formation of the needle thread triangle in the known way, during the stitch production.

In the embodiment shown in FIGS. **1** and **6**, the stitch group machine is a button sewing machine, which in place of the usual feeding means for the sewing goods, shows only the pivotally mounted button clamp. On this basis, an auxilliary looper **40** cooperates in the known way with the rotating chain-stitch looper **31**, which is held on shaft **41** parallel to the looper shaft **29**. For the driving of the auxillary looper **40** in an oscillating movement, there is provided an eccentric **42** on the shaft **29** which is situated in positively connected driving connections with rocking levers **43** carried on shaft **41**.

The main shaft **4** is driven by a stationary motor with a rotating drive (not shown) which transmits its drive through belt **44** to drive pulley **45** fixedly connected to the main shaft **4**. Laterally of the drive pulley **45**, an idler pully **46** is arranged, which is freely rotatable on the shaft **4**, and axially spaced from drive pulley **45**.

Within the cup-shaped formed drive pulley **45** are (see FIGS. **3** and **4**) two buffer means **47**,**48** arrnaged, the buffer means **47** being held on the peg **49** fastened to the drive pulley **45**, whereas the buffer means **48** is carried on its peg **50** which in turn is held on the rotatably supported pulley **51** (see FIG. **1**) mounted on a lug of pulley **45**.

As especially shown in FIG. **3**, there is arranged between the two buffer means **47**,**48** an arc-formed, trained spring **52**, which in its relaxed condition holds the buffer means **47** carried by pulley against the opposing segment **53**. The pulley **51** is secured against dropping out sideways by means of a cover plate **54** fastened on the front face of the drive pulley **45**, and as FIG. **2** shows, is provided with a lifting flank **55**, which in the range of its apex, ends in a slot **56** for the knocking-off cam **57**. The knocking-off cam **57**, at its upper end, is connected with a journal **58** which is pivotally supported on carrier **59**.

The carrier **59** is pivotally supported on upright **2** at its lower end with the aid of a bolt **60**. On its lower side, the knocking-off cam **57** is forked and is hinged to the leveled off upper region of rod **61** which is pivotally received in the pivotally supported guide **62** of carrier **59**.

Between the guide **52** and the adjustable nut **63** at the lower end of rod **61**, a spring **64** is provided for a purpose to be described below. The carrier **59** will, by means of its being supported at one end by upright **2** and in the area of its upper end by spring **65**, be urged to an operating position, in which the knocking-off cam **57** is engaged in the stop slot **56** of pulley **51**. The carrier **59** is provided, at its lower end, with a catch **66** which cooperates with counter-latch **67** to permit running of the machine. The counter-latch **67** is arranged at the free end of the a control lever **69** pivotally supported on upright **2** by means of a journal screw **68**, the other end of lever **69** cooperating with control cam **70** fastened to control wheel **20**. The control lever **59** is held, with the aid of spring **71**, in its secured position in which knock-off cam **57** is out of engagement with pulley **51**, whereby the counter-latch **67** is prevented from moving in a counter-clockwise direction to allow the carrier **59** to pivot on its axis serving bolt **60**.

In order to brake the main shaft **4** down to a harmless speed for the knocking-off cam to operate, the face of drive pulley **45** (FIGS. **3–4**), serves as the application surface for a segment-like formed brake shoe **72**, which is arranged at the upper end of brake lever **74**, pivotally supported on carrier **59** in journal **73**. The brake lever **74** is urged towards its braking position by means of a spring **75** having one end supported on upright **2**, and the other end held by the lever **74**.

In order to prevent the brake plate **72** from becoming active during the running of the machine, a journal screw **76** is fastened on carrier **19** which projects through a slot-like clearance **77** for brake lever **74** and thereby limits the movement of the brake lever relative to the carrier **19**.

In order to connect the machine, i.e., to transfer the belt **44** from the idler **46** to the drive pulley **45** with the aid of the belt guide **78** fastened on carrier **59**, as well as to free the brake plate **72** and the knock-off cam **57**, a lever **79** pivotally supported on upright **2**, is provided. Its lower end is connected to a pedal actuated tie rod **80** while its upper end operates in the area of catch **66** on carrier **59**, and swings the carrier **59** in a clockwise direction against the action of springs **65**,**75** until the counter link **67** siezes the latch **66** of carrier **59**.

The new thread cutting arrangement operates as follows:

During the normal stitching operation, the looper point **32** seizes the needle thread loop and widens it in the known way to form the needle thread triangle. Thereby the shank leading to the thread supply is guided over the looper back and proceeds then to hug the shoulder **34** parallel to the boundary limiting surface **39** facing the point **32** of looper back **33**. The shank of the loop leading to the sewing goods slides next over the lead cam **38** of the cutting knife **36** and the thread loop will then be guided over the looper back **33** to snap off of the looper **31**.

At the end of the sewing, the severing of the needle thread loop results simultaneously with the stopping of the main shaft **4.** To this end, the control cam **70,** fastened on the control wheel **21,** temporarily actuates the control lever **69,** to thereby turn the same in a counter-clockwise direction about journal **68.** The catch **66,** at the lower end of carrier **59,** is thereby set free so that carrier **59,** through the operation of spring **65** performs a counter-clockwise swinging movement about bolt **60.** The belt **44** is shifted with the aid of belt guide **78** from the drive pulley **45** to the idler pulley **46.** Simultaneously therewith, the brake lever **74,** through operation of its spring **75,** is pivoted about is journal **73.** The brake plate **72** contacts the face of the drive pulley **45** positively engaging and braking the apparatus.

Through the pivotal movement of carrier **59** around the bolt **60,** the knocking-off cam **57** has come into positive engagement with lifting flank **55** of pulley **51** and is close to (by the simultaneous operation of the brake plate **72**), the apex of the lifting flank and the stop-slot **56** on it. The knocking-off cam **57** falls down then in the slot **56** of pulley **51** and stops practically instantly.

Since the knocking-off cam **57** is pivotal about the axis of journal **58,** it will take the pulley **51** with it around a predetermined amount in the direction of rotation, whereby rod **71** with its guide **62** executed a corresponding pivotal movement, and the spring **64** is tensioned by the relative movement between rod **61** and guide **62.**

By the insertion of knocking-off cam **57** in slot **56** of pulley **51,** the buffer means **48,** carried by pulley **51,** is likewise stopped nearly suddenly. Thereby, due to the unaffected further rotation of the drive pulley **45,** the spring **52** between the buffer means **47,48** is likewise tensioned. As soon as the remaining moment of gyration of the main shaft **4** no longer overcomes the force between springs **52** and **64,** the main shaft **4** quickly comes to a stand-still and rotates backward almost immediately, due to the expansion of springs **52,64** about a predetermined angle to the proper stopped position.

Since the main shaft of stitch-group sewing machines is driven at constant speed and the reaction time of the brake plate **72,** through control cam **70** and the shape of the lifting flank **55** is pregiven, the so-called reduced speed of the main shaft and the braking pivotal movement of springs **52,64** remain constant. Thereby, the movement of the reverse motion of the main shaft is precisely determined and safe, so that, at the moment of motion reversal of the main shaft, that arm of the needle loop going to the sewing goods has glided off the lead cam **38** of knife **36** and lies in front of the cutting edge **37.**

Since the knife edge **37** stands back a predetermined amount from the limiting surface **39** of the looper back **33** opposite the looper point, the arm of the thread loop going to the sewing goods is found, at the moment of reverse movement, closely in front of the blade **37,** while the arm of the loop going toward the thread supply is a predetermined distance therefrom. The needle thread loop takes, at the moment of reversal of the main shaft, the position shown in FIG. **5** with respect to the looper **32** and the cutting edge **37.**

During the back rotation of the main shaft, which results from the expansion of springs **52,64,** the cutter **37** severs the leg of the thread loop leading to the work goods. On the other hand, the leg of the thread loop leading to the thread supply remains at a distance from the cutting edge **37** and based on its clearance and especially on the construction of the boundary limiting surface **39** of the looper back remains intact.

In this way the following is attained: the back rotation of the main shaft which is necessary at the end of a stopping operation to obtain prompt nullification of the oscillation moment, is utilized directly for severing the needle thread loop. The needle thread loop is so severed that a comparatively short end remains on the work goods, while for the end towards the thread supply remains intact with a sufficient length for the formation of the initial stitch of the next sewing cycle.

We claim:

1. In a chain stitch sewing machine of the type having a rotating looper with a looper point and a looper back, a main shaft, a shaft for rotating the looper, means for driving the looper shaft from the main shaft and stopping mechanism for the main shaft adapted to substantially instantaneously stop said shaft in a predetermined angular position and including means permitting a slight over-run of said shaft and subsequent recoil of said shaft to said predetermined position, in which position the thread loop is held on the looper, an improved means for cutting the thread when the machine is stopped comprising knife means attached to the back of the looper and having a cutting edge spaced above the back of the looper and arcuately extending in the direction of the point of the looper, but substantially opposite the latter with respect to the axis of the looper shaft, whereby the recoil of the main shaft during stopping drives the looper in a reverse direction to apply the cutting edge of the knife means against a leg of the thread loop held on said looper to cut the thread.

2. A chain stitch sewing machine as claimed in claim **1,** wherein said cutting edge of the knife extends generally in a plane parallel to the drive shaft of the rotating looper but is concave thereto and is spaced from the side surface of the back of the looper.

3. A chain stitch sewing machine as claimed in claim **1** wherein that side of the knife means away from the cutting edge is formed as a lead cam to guide the leg of the thread loop leading to the sewing goods thereover.

* * * * *