United States Patent [19]

Allander

[11] **3,877,458**

[45] **Apr. 15, 1975**

[54] **PORTABLE STOVE**

[75] Inventor: **Claes Vilhelm Allander,** Stockholm, Sweden

[73] Assignee: **Aktiebolaget Optimus,** Upplands Vasby, Sweden

[22] Filed: **Feb. 4, 1974**

[21] Appl. No.: **438,521**

[30] **Foreign Application Priority Data**

Feb. 2, 1973 Sweden 7301471

[52] **U.S. Cl.** ..... **126/44;** 126/9 R; 126/38; 126/50; 431/247

[51] **Int. Cl.** **F24c 5/20**

[58] **Field of Search** ..... 126/44, 38, 50, 9 R; 431/247

[56] **References Cited**

UNITED STATES PATENTS

476,694	6/1892	Smith	431/247
1,105,079	7/1914	Hovenden	126/44
2,325,077	7/1943	Robinson	126/38
2,969,054	1/1961	Axelsson	126/38

FOREIGN PATENTS OR APPLICATIONS

344,541	3/1960	Switzerland	126/44

Primary Examiner—Carroll B. Dority, Jr.
Assistant Examiner—Harold Joyce
Attorney, Agent, or Firm—Ostrolenk, Faber, Gerb & Soffen

[57] **ABSTRACT**

A collapsible weight small sized portable stove for butane fuel from a disposable cartridge. The vaporizing or preheating tube is in the form of a loop having at least one portion located in the region passed by the flames and being formed and positioned for supporting a cooking utensil such as a saucepan.

9 Claims, 12 Drawing Figures

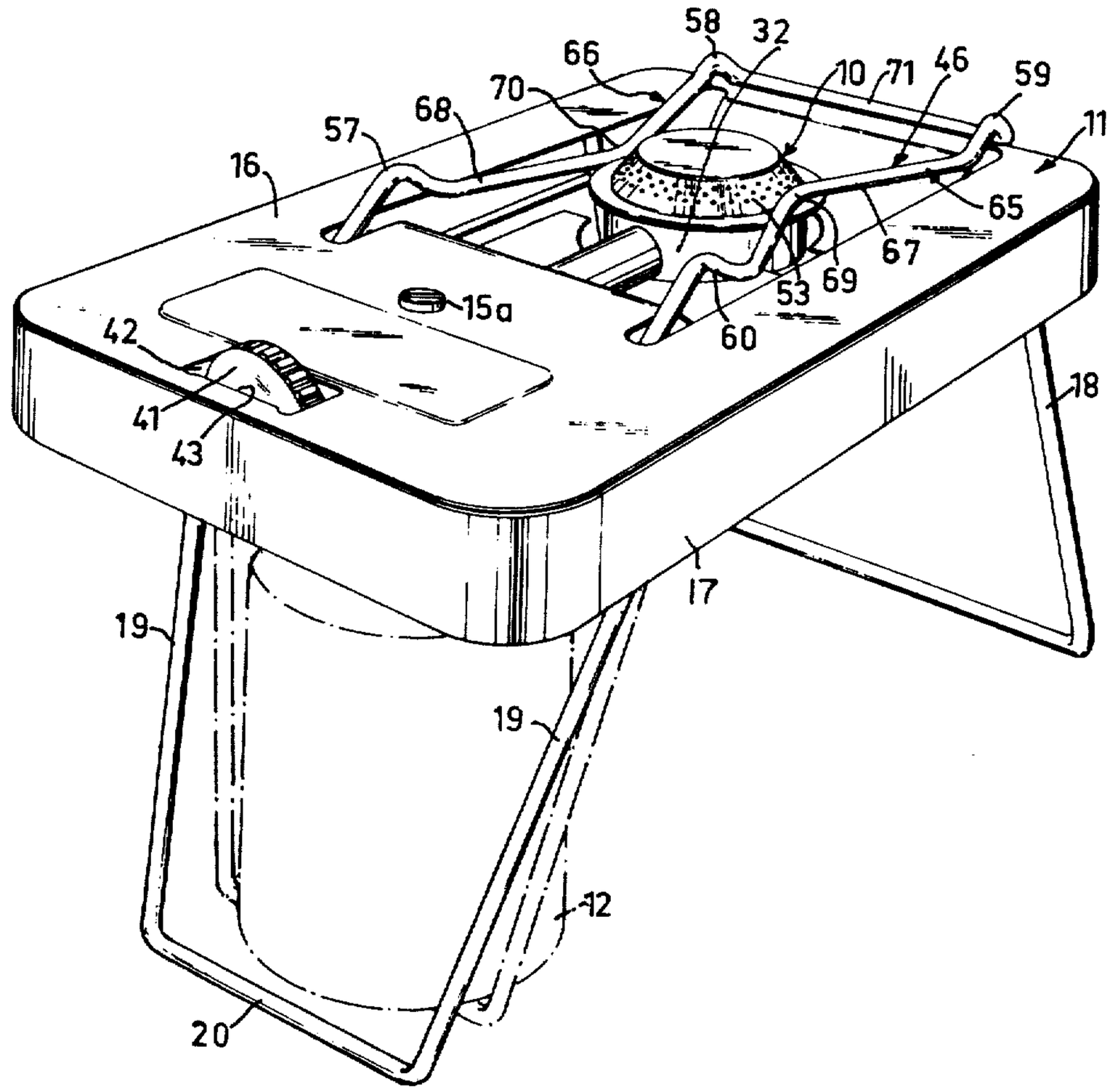

FIG. 1

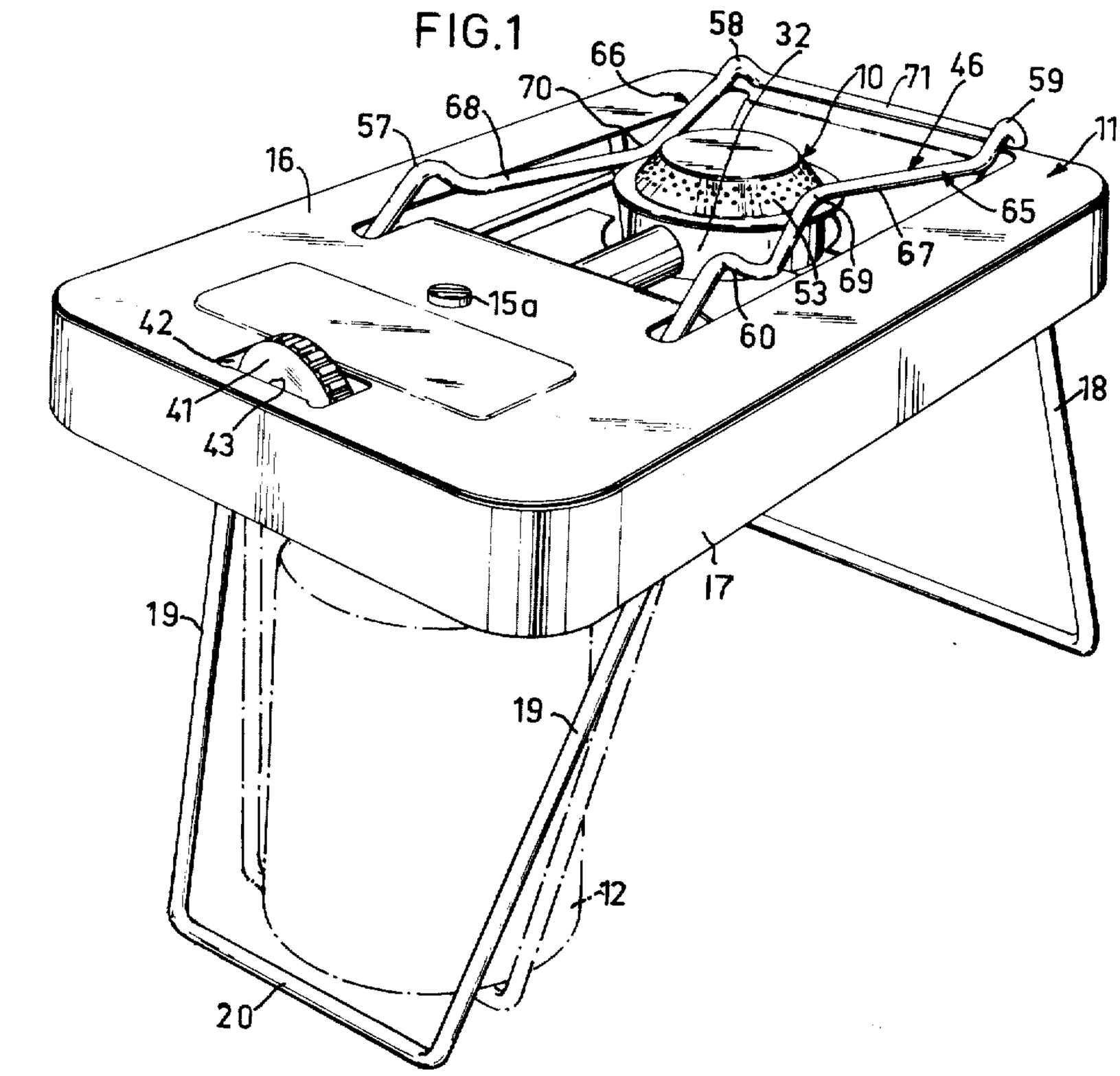
58
32
66
70
68
57
16
10
71
46
59
11
65
67
53
69
60
15a
42
41
43
18
19
19
17
12
20

FIG. 2

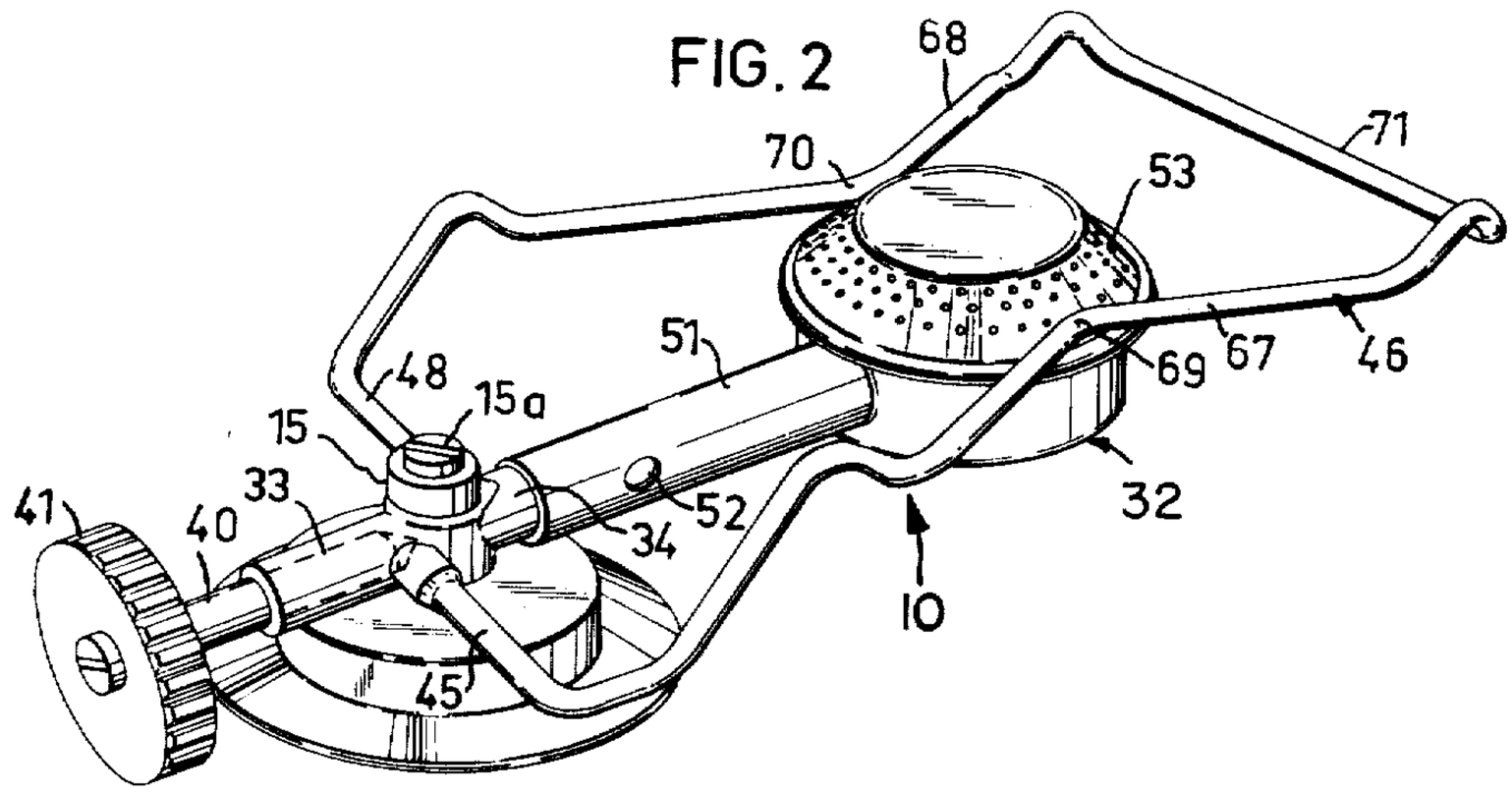
68
71
70
53
51
48
15a
69
67
46
15
33
41
40
34
52
32
10
45

FIG.1a

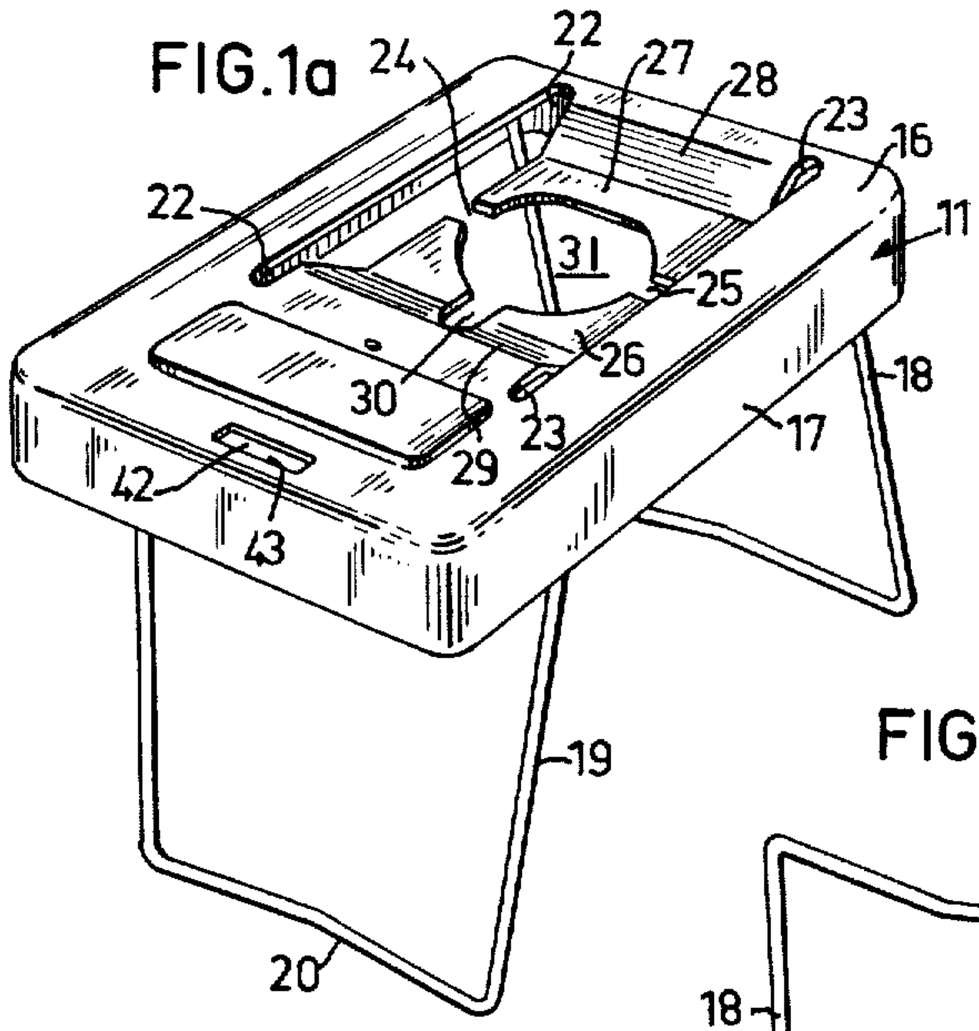

FIG.1b

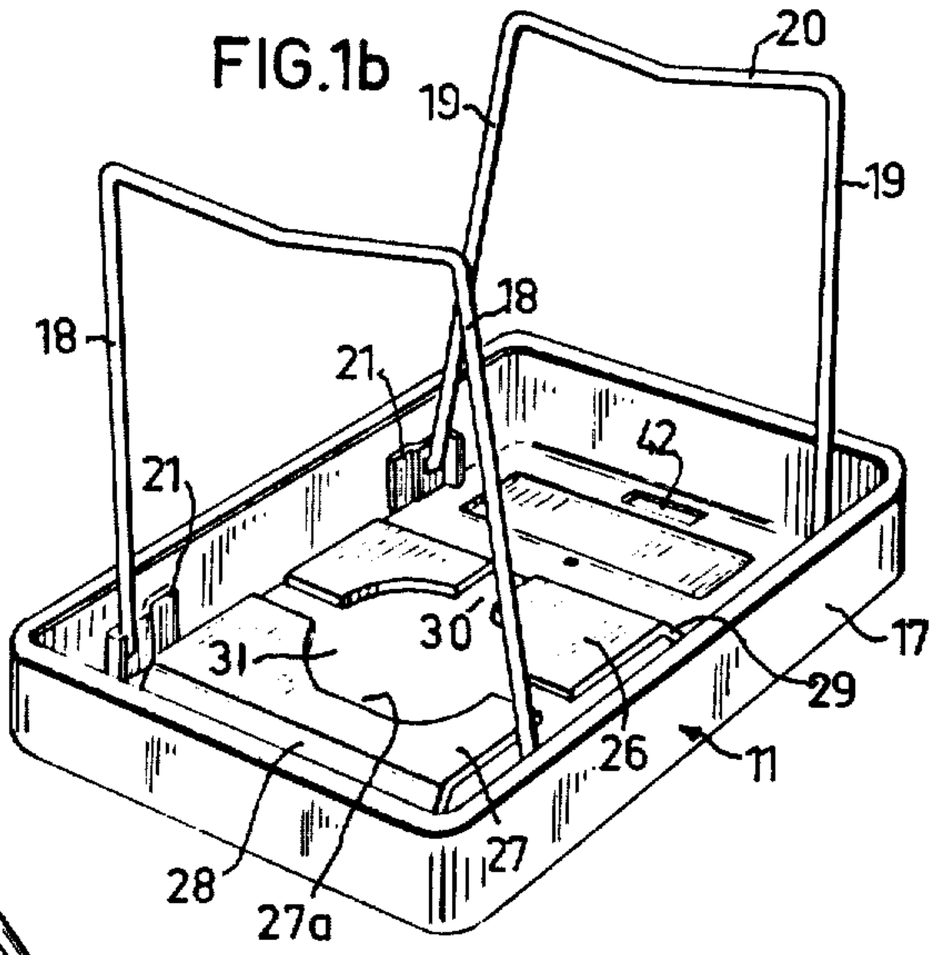

FIG. 2a

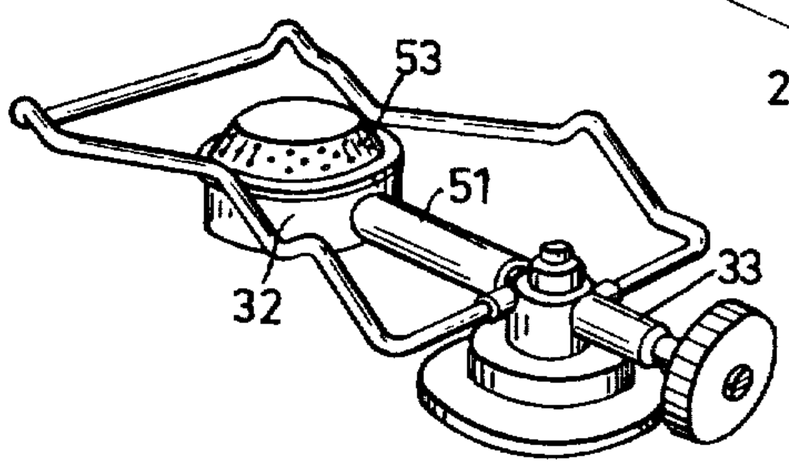

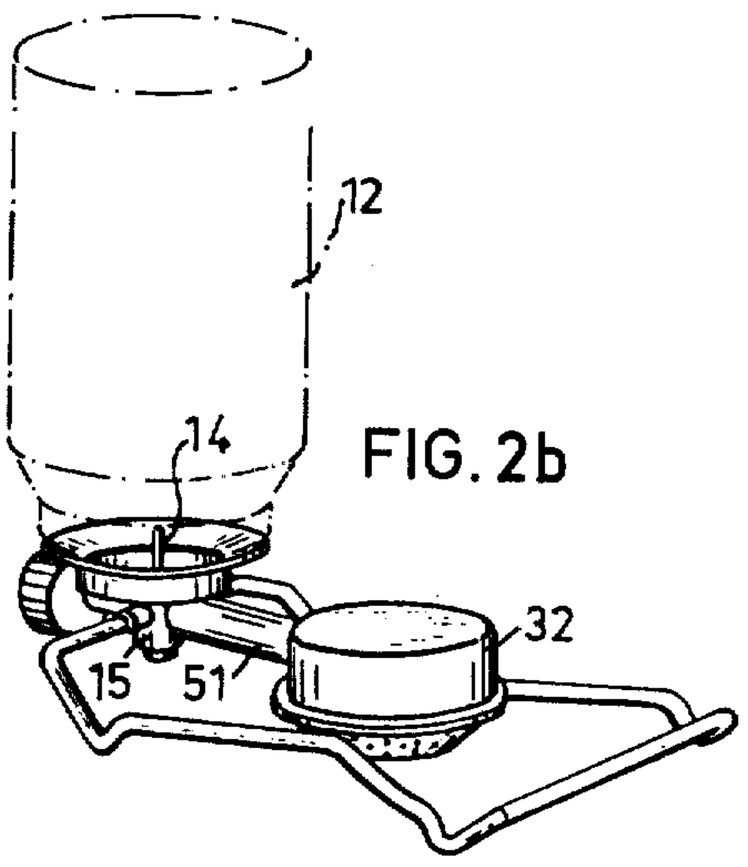

FIG. 2b

FIG. 3

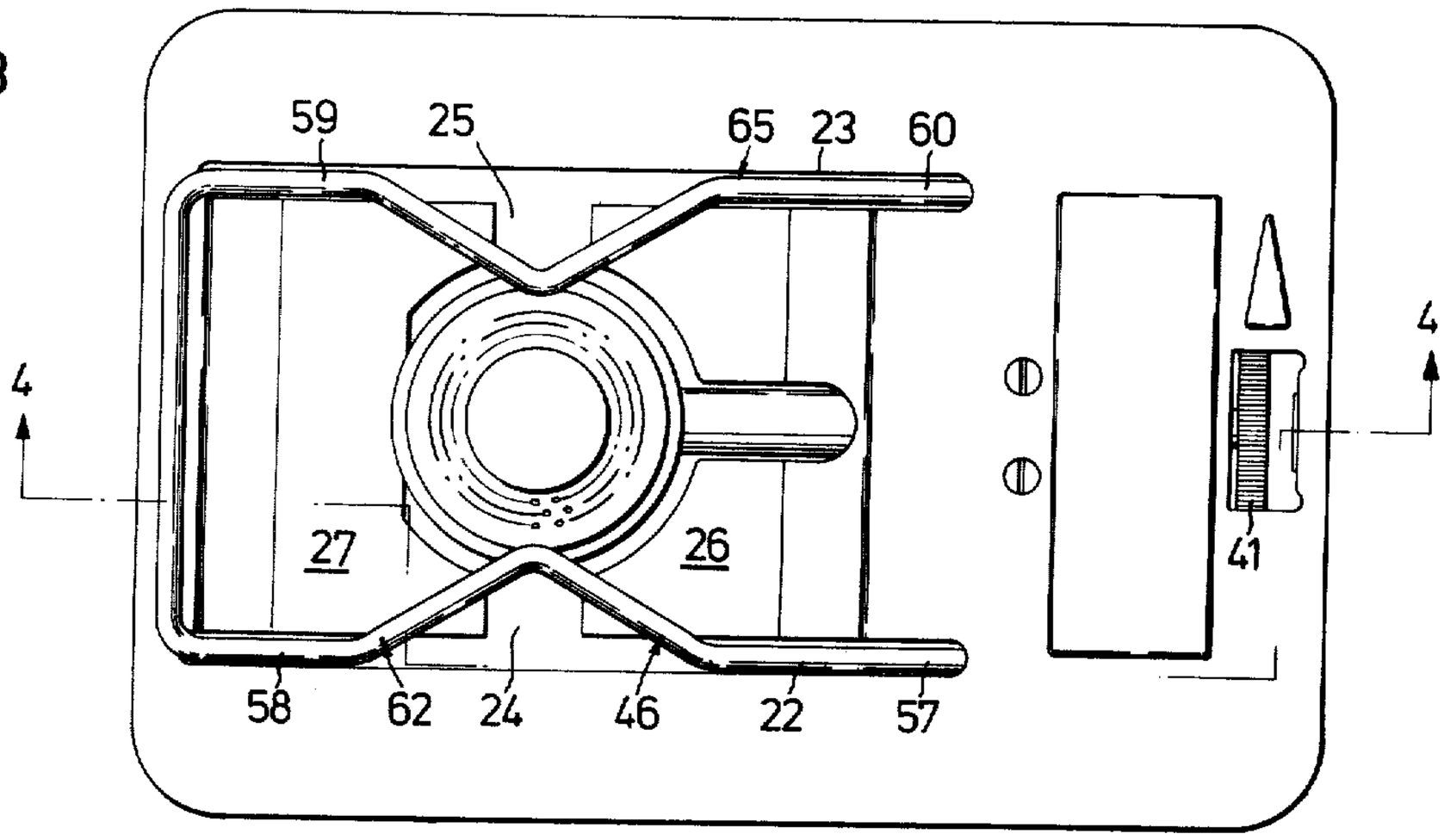

FIG. 4

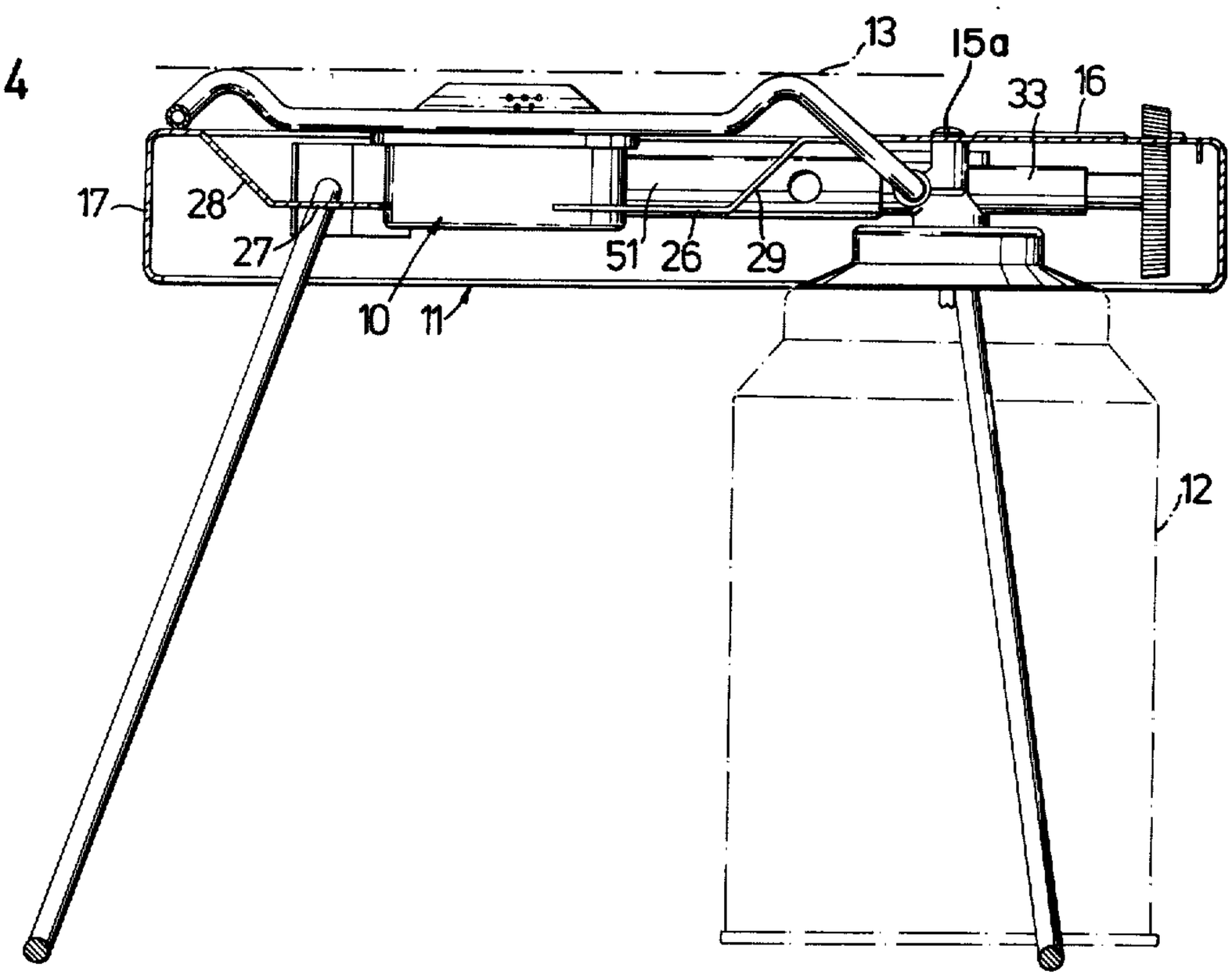

FIG. 5

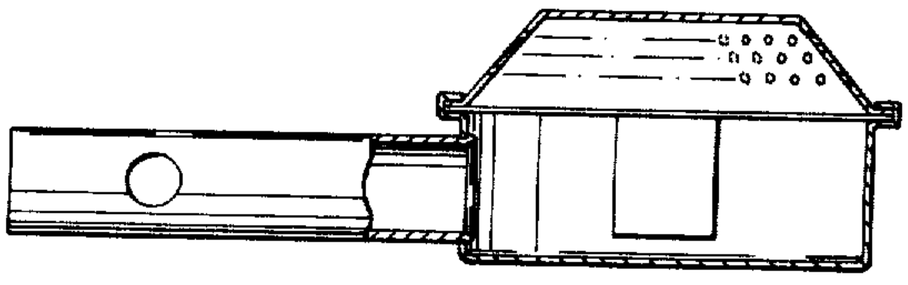

FIG. 6

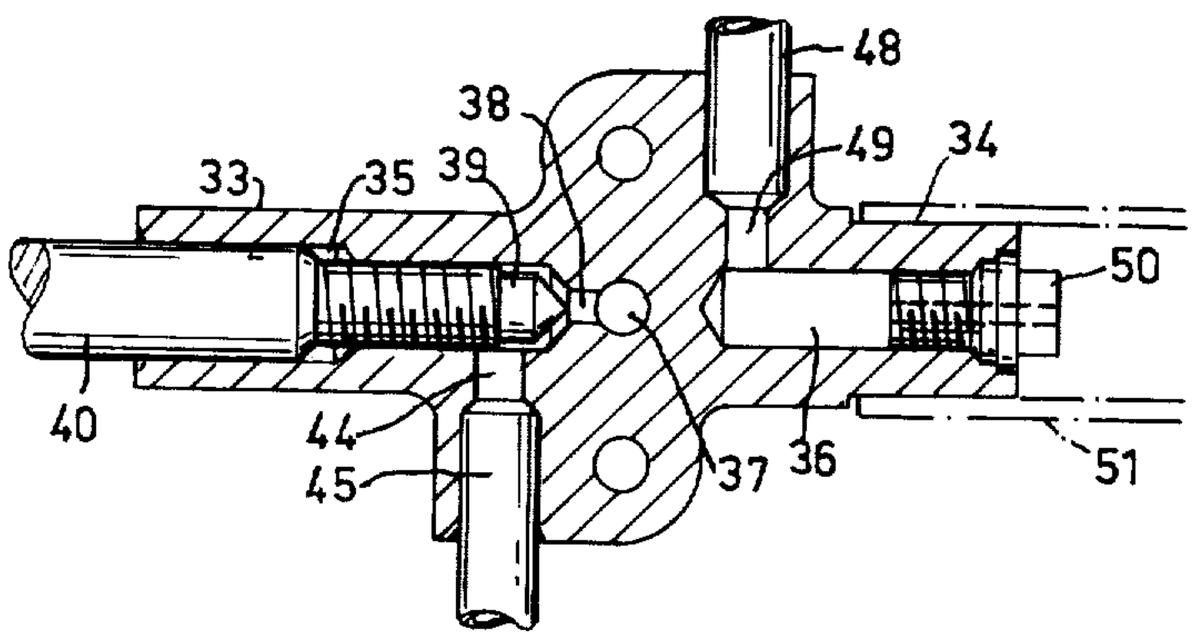

FIG. 7

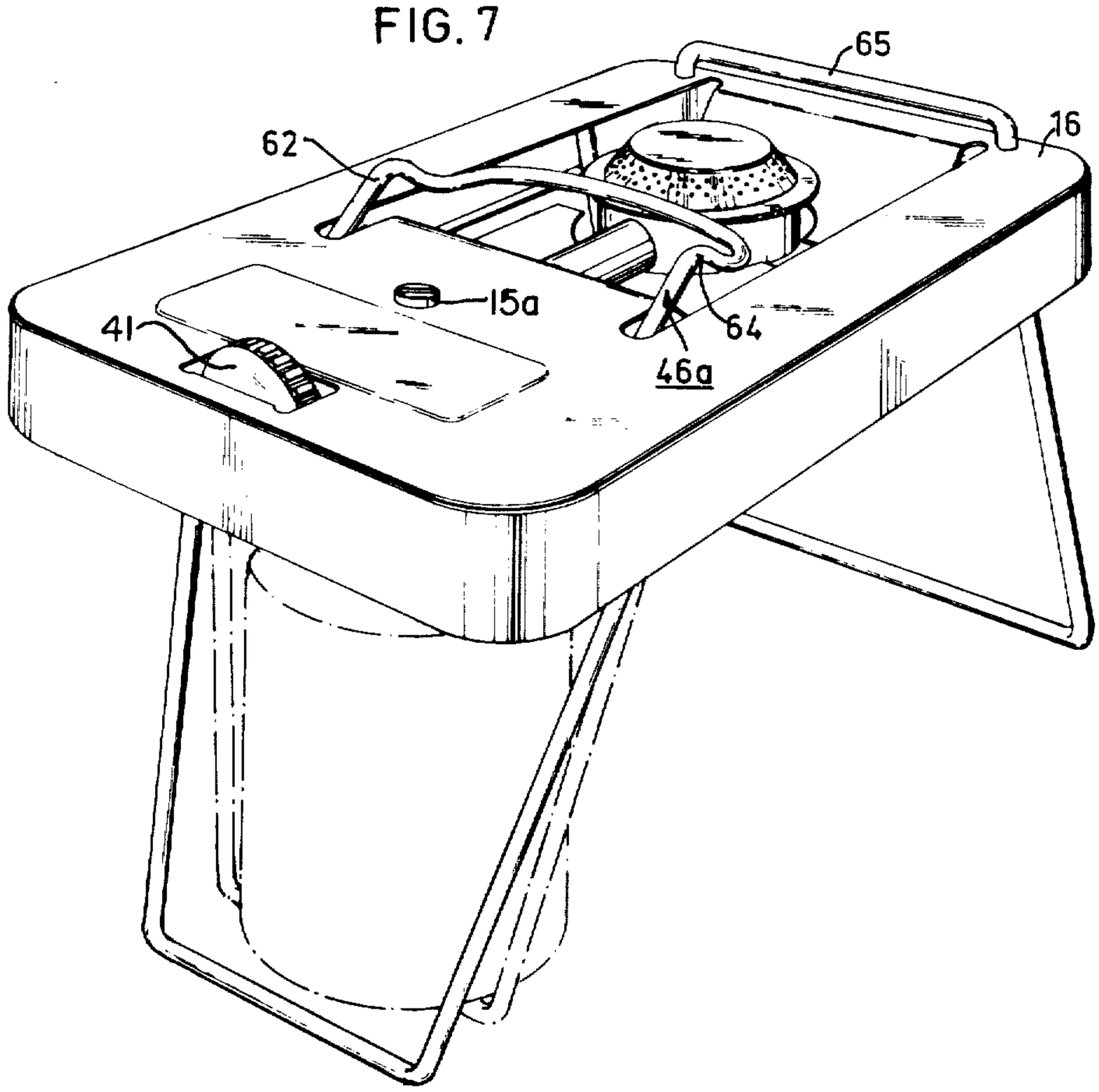

FIG. 8

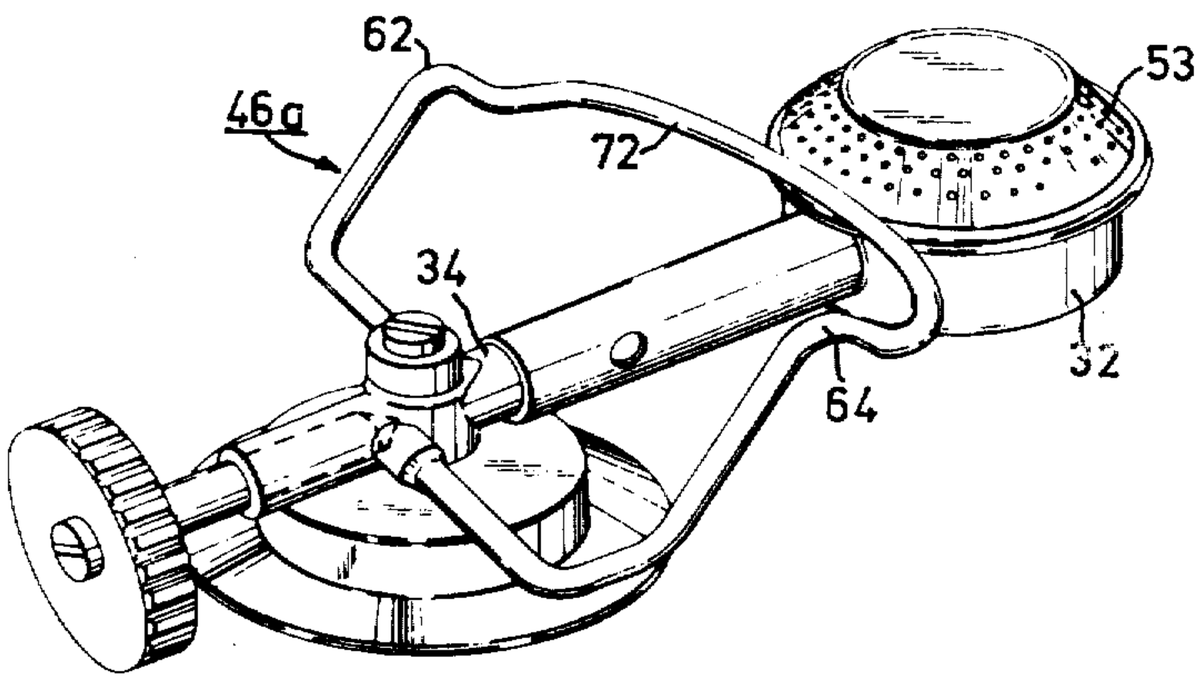

PORTABLE STOVE

The present invention relates to a portable stove comprising a burner apparatus and a stove stand for supporting the burner and a disposable cartridge for liquified gas such as butane.

The general object of the invention is to provide a portable stove which is intended for liquified fuel gas such as butane and which may be collapsed to small dimensions when not in use and which has a preheating tube for effectively vaporising the liquified gas before entering the burner head of the burner apparatus.

Another object of the invention is to provide a portable stove having simple windshield means which will reduce the influence of wind on the flame and on the vaporising tube so that the flame will be kept relatively steady and the vaporising tube will be kept at a high temperature and reach the desired temperature quickly when starting up the stove.

These and other objects will be attained with the invention as explained more in detail in the following specification with reference to the accompanying drawings showing by way of example preferred embodiments of the inventive stove, the features of which being set forth in the claims.

IN THE DRAWINGS

FIG. **1** is a perspective view of one embodiment of the portable stove according to the invention,

FIG. **1***a* is a perspective view of only the portable stand of FIG. **1** with the burner apparatus and disposable fuel cartridge removed,

FIG. **1***b* is a bottom perspective view of the underside of the stand of FIG. **1***a*,

FIG. **2** is a perspective front view of the burner apparatus alone,

FIG. **2***a* is a perspective front view of the burner from opposite side relative to FIG. **2**,

FIG. **2***b* is a bottom perspective view of the burner apparatus,

FIG. **3** is a plan view of the top of the stove,

FIG. **4** is a sectional view of the stove along line **4—4** in FIG. **3**,

FIG. **5** is a sectional view of the burner head,

FIG. **6** is a sectional view of the valve housing,

FIGS. **7** and **8** are views similar to FIGS. **1** and **2** of another embodiment of the stove.

With reference to FIGS. **1** to **6**, the stove comprises a burner apparatus **10**, a stand **11**, for supporting the burner apparatus and a disposable fuel cartridge **12** of standard type for liquified butane. A cooking utensil such as a saucepan with a bottom **13** may be placed on the stove as indicated in FIG. **4**.

The fuel cartridge **12** is a cylindrical container which at its top end has an opening for inserting a connecting pipe **14** of the valve housing **15** (FIG. **2***b*). When the pipe **14** is inserted in the cartridge, a non-return valve is opened for admitting fuel liquid through the connecting pipe into the valve housing **15** of the burner apparatus.

The stand **11** comprises an inverted trough of sheet metal having a top plate **16** and a closed frame defined by side flanges **17**. A pair of rear legs **18, 18** and front legs **19, 19** are pivotally mounted to the flanges **17** and may be collapsed to a position under the top plate and within the frame formed by side flanges **17**. The front legs, **19** are formed by a U-shaped wire having a horizontal intermediate portion **20** which may be moved to a position under the bottom of the cartridge **12** (dotted line position) to secure the cartridge to the burner apparatus as illustrated in FIGS. **1, 2***b* and **4**.

Small lugs **21** are welded to the inside of the flanges **17** and are provided with holes for receiving the ends of the legs **18, 19** as shown in FIG. **1***b*.

The top plate **16** is provided with two longitudinal parallel spaced slots **22, 23**. The portion of the top plate between the slots is divided by means of transverse slots **24, 25** into two bottom portions **26, 27** connected to the top plate by sloping oppsoite end walls **28, 29** so that the bottom portions are located in a lowered position at a level about half of the height of the flanges **27**. One of the end walls has a central longitudinal slot **30**. The end edges of the bottom portions **26,** 27 have been cut to form an opening **31** for the burner head **32**.

The valve housing **15** is secured by one or more screws **15**a to the underside of the top plate.

At opposite ends of the valve housing are axially extending studs **33, 34** having cylindrical bores **35, 36**. In the bottom of the valve housing is a vertical bore **37** (FIG. **6**) in which the connecting pipe **14** is mounted. Liquid fuel enters the vertical bore and passes through a channel **38** to a metering valve having a valve member **39** at the end of a control rod **40** which by means of threads is axially movable in the stud **33**. The control rod **40** has a control knob **41** which is mounted so that a portion thereof projects through an aperture **42** in the top plate. The aperture permits desired axial movement of the knob **41**, but the outer edge **43** of the aperture forms a stop member preventing the rod from being disengaged from the stud **33**. When the metering valve is open, the fuel flows into a transverse bore **44** (FIG. **6**) to which one end **45** of the vaporizing tube **46** is connected. The other end **48** of the vaporizing tube is connected to another transverse bore **49** in the valve housing and this bore is in communication with the axial bore **36** in the stud. At the end of bore **36** is an orifice **50**.

Inserted into the stud **34** is one end portion of a tube **51**, which at its other end supports the burner head **32**. The tube **51** is provided with a primary air opening **52**.

The mixture of vaporized fuel and air enters the burner head and flows upwardly to a spreader member **53** in the form of a frustoconical member having a plurality of gas outlet openings. As will be understood from FIG. **4**, the gas outlet openings are positioned close to the bottom **13** of the saucepan or similar utensil placed on the stove.

The tube **51** of the burner apparatus passes freely through the central slot **30** in the bottom portion **26** and wall **29**. The burner head **32** is positioned between the opposite recessed edges of the bottom portions **26,** 27. However, the edge **27**a of the bottom portion **27** forms an axial stop for the burner head **32** to keep its tube **51** in position on the stud **34** of the valve housing.

As will be understood particularly from FIG. **4**, the flanges **17** form a windshield around the burner apparatus and its burner head and due to the fact that the top plate will have a recessed portion in the region around the burner head because of the lowered position of the bottom portions **26, 27**, there will be an enlarged partially closed space around the burner head so that the main portion of the secondary air will enter through the windshielded slots **22, 23, 24, 25** in the top plate into

said space. The combustion gases and the flames can leave said space through the relative narrow gap between the bottom **13** (FIG. **4**) of the cooking utensil and the top plate **16.** The slots **22, 23, 24, 25** have a wind shielded position behind the flanges so that the air flow through the slots will be relatively steady also when the stove is used under weather conditions with strong winds.

In order to obtain an effective heating of the vaporizing tube **46** it is shaped as a loop having at least one portion located in the vicinity of the burner head so that the flames will effectively heat the tube as will be understood from FIGS. **1** and **7.**

The configuration of the loop of the vaporizing tube may generally have the shape indicated in FIGS. **1** and **2** or as an alternative as indicated in FIGS. **7** and **8.**

In order to simplify the construction of the stove at least some of the members for supporting the cooking utensil with its bottom at a desired closely spaced distance above the burner head are comprised of portions of the vaporizing tube which to this end is bent locally at the places shown in FIGS. **2** and **8** to form upwardly projecting supporting feet. In FIGS. **1** and **2** there are four such supporting feet **57, 58, 59,** and **60,** and in the embodiment of FIGS. **7** and **8** the vaporizing tube is formed with two supporting feet **62, 64,** which together with a rear support member **65** secured to the plate **16** form the supporting members for the cooking utensil.

By using part of the vaporizing tube **46** in FIG. **1** or **46**a in FIGs. **7** and **8** as a support for the cooking utensil, the position of the main part of the vaporizing tube will be located in the region of the flames, that is in the small gap between the top plate **16** and the bottom **13** of the cooking utensil, as will be understood from FIG. **4.**

The main difference between the embodiments in FIG. **2** and FIG. **8** of the vaporizing tube respectively is that the loop of the vaporizing tube **46** in FIG. **2** is much longer than the loop of the vaporizing tube **46**a in FIG. **8.**

The longer loop of the vaporizing tube in FIG. **2** is used to form two side legs **65, 66** having inwardly extended bends **67, 68** in one and the same plane so that the inner ends **69, 70** of the bends will rest on the burner head and prevent rotation of the same on the stud **34** of the valve housing. The side legs **67, 68** are connected by a transversely aligned end connecting portion **71** which rests on the top plate **16.** Accordingly, the forces on the feet **57, 58, 59, 60** will be transmitted to the top plate via the transverse portion **71** and the screw or screws **15***a* securing the valve housing to the top plate.

However, a long vaporizing tube will extend the time between adjustment of the knob **41** and the corresponding change of the flame, and therefore it may in some applications be convenient to have a shorter vaporizing tube such as the tube **46** shown in FIGS. **7** and **8.** In this embodiment the vaporizing tube **46***a* extends in a transverse loop portion **72** between the feet **62, 64** and engages the burner head **32** to prevent rotation of the same on the stud **34.** Also in this embodiment the flames will effectively heat the vaporising tube, but the extra member **65** will complicate the manufacture to some extent, and further the attachment of the burner apparatus must be designed with respect to increased forces on the screw **15***a*.

What I claim is:

1. A burner assembly comprising:
a housing having a first inlet opening;
an inlet pipe extending from said housing first inlet opening for releasable attachment to a fuel cartridge;
a burner head;
a connecting tube coupled between said housing and said burner head;
a first outlet opening in said housing;
a first passageway in said housing extending between said first inlet and said first outlet opening;
a second inlet opening and a second outlet opening in said housing;
a second passageway extending between said second inlet and outlet openings; said connecting tube communicating with said second outlet opening;
a hollow elongated vaporizing tube having its free ends respectively coupled to the first outlet opening and second inlet opening of said housing for delivering fuel from said cartridge to said burner apparatus;
said vaporizing tube having at least an intermediate portion thereof positioned in close proximity to said burner head for heating said vaporizing tube during the burning of fuel to vaporize the fuel flowing through the vaporizing tube as the fuel is fed to the burner head;
said vaporizing tube being bent to form a support for a utensil positioned above the burner head.

2. A stove as defined in claim **1,** in which the loop of the vaporizing tube extends around the burner head and has two side legs on opposite sides of the burner head and a transverse leg connecting the ends of the side legs, the vaporizing tube being formed with local upwardly extending bends to provide supporting feet at the ends of said legs to support a cooking utensil, with said transverse leg resting on the upper side of the top surface.

3. A stove as defined in claim **1,** in which said loop has a transverse middle portion positioned on the same side of the burner head as the valve housing and in close proximity to the burner head.

4. A stove as defined in claim **1,** in which the burner head connecting tube is loosely inserted and rotatable about a stud projecting from the valve housing second outlet opening and said loop of the vaporizing tube is formed with at least one portion engaging the burner head to prevent rotation thereof on said stud.

5. A portable stove comprising:
a burner assembly;
a stand for supporting said burner assembly, said stand including means for releasably securing a disposable fuel cartridge to said stand;
said stand comprising a metallic sheet forming a top surface and downwardly depending side flanges;
said burner assembly comprising a valve housing secured to the underside of said top surface and having means for releasable coupling to a fuel cartridge outlet;
a burner head; an outlet opening in said housing; a tube connecting the burner head to the housing outlet opening;
a hollow elongated vaporizing pipe extending between a pair of openings in said valve housing for coupling the inlet coupling means to the housing outlet opening;

said top surface having a recessed opening for receiving said burner head;

said vaporizing pipe being arranged to form a loop having a portion thereof in close proximity to said burner head for vaporizing fuel passing therethrough towards said burner head;

the looped portion of the vaporizing pipe serving as a means for supporting a cooking utensil a spaced distance above said burner head.

6. The portable stove of claim **5**, wherein said valve housing further comprises valve means for regulating the rate of flow of fuel entering into said vaporizing pipe.

7. The portable stove of claim **5**, wherein said top surface is provided with slots adjacent said opening for positioning and supporting the vaporizing pipe.

8. A stove as defined in claim **7**, in which the recessed slotted portion of said top surface is positioned intermediate the top surface and the bottom edges of the side flanges.

9. The portable stove of claim **5**, further comprising a first and second set of supporting legs pivotally secured to the underside of said stand for supporting said stand when in the extended position and being confined within said side flanges when in the collapsed position;

said cartridge securing means comprising one of said legs and having a U-shaped configuration adapted to support a fuel cartridge therebetween when in the extended position.

* * * * *