United States Patent [19]

Murata et al.

[11] **3,875,813**

[45] **Apr. 8, 1975**

[54] **COMPACT ELECTRONIC COMPUTER**

[75] Inventors: **Minoru Murata**, Yokohama; **Tatsuo Nishikawa**, Tokyo; **Takayoshi Hanagata**, Yokohama, all of Japan

[73] Assignee: **Canon Kabushiki Kaisha**, Tokyo, Japan

[22] Filed: **Apr. 7, 1971**

[21] Appl. No.: **131,979**

[30] **Foreign Application Priority Data**

Apr. 13, 1970 Japan 45-31843

[52] **U.S. Cl.** **74/130;** 192/45; 226/157

[51] **Int. Cl.** **F16h 27/02**

[58] **Field of Search** 74/130; 192/45; 226/157

[56] **References Cited**

UNITED STATES PATENTS

2,229,283	1/1941	Fischer	192/45
2,544,996	3/1951	Kander	192/45
2,664,183	12/1953	Payne	192/45
3,247,727	4/1966	Digby et al.	192/45
3,289,189	11/1966	Clark et al.	226/157
3,448,249	6/1969	Jones, Jr.	226/157

FOREIGN PATENTS OR APPLICATIONS

1,359,321	3/1964	France	226/157

Primary Examiner—Charles J. Myhre
Assistant Examiner—Wesley S. Ratliff, Jr.
Attorney, Agent, or Firm—Fitzpatrick, Cella, Harper & Scinto

[57] **ABSTRACT**

A tape driving system incorporated in a compact electronic computer of the type using a cartridge containing therein a printing tape, which system is characterized by a rotatably mounted main drive shaft and an auxiliary drive shaft loosely fitted around the main drive shaft, cam means for providing in the main drive shaft at least one cam portion and defining at least one wedge-shaped space by cooperating with the inner wall of the auxiliary drive shaft, a follower received in the wedge-shaped space, and biasing means for urging the follower in a predetermined direction within the wedge-shaped space, whereby the reciprocal rotation of the main drive shaft may be transmitted as an intermittent rotational movement to the auxiliary drive shaft. The system may further include shock absorbers provided in the direction of movement of a plunger actuator to absorb any shock imparted by the plunger during the tape feed. The invention also covers a compact electronic computer incorporating therein the above driving system.

6 Claims, 13 Drawing Figures

FIG. 6

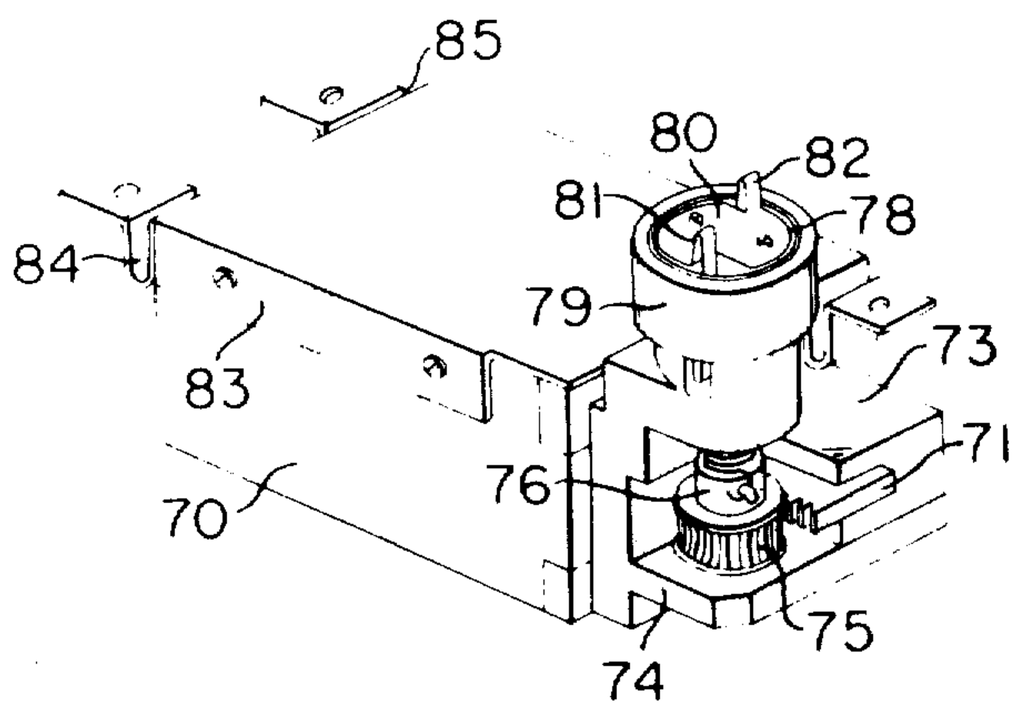

FIG. 9

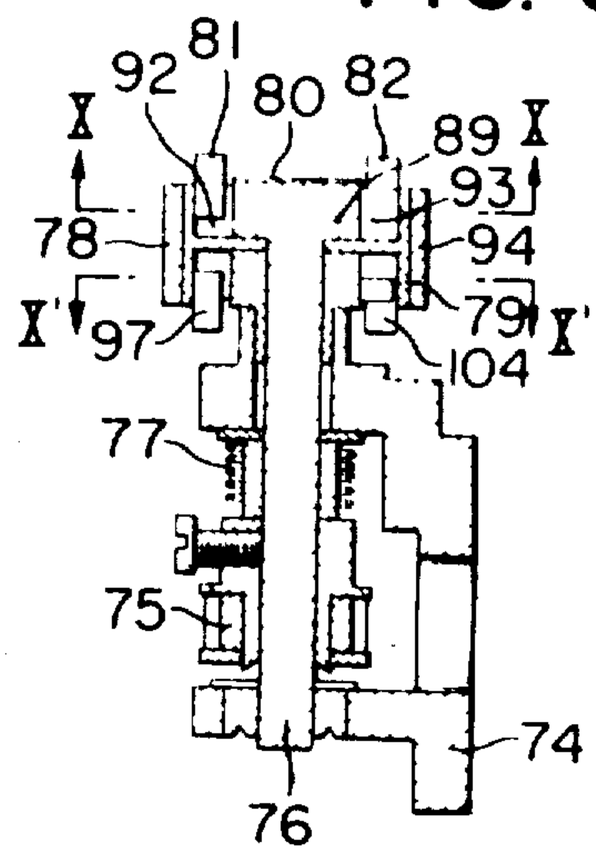

FIG. 1

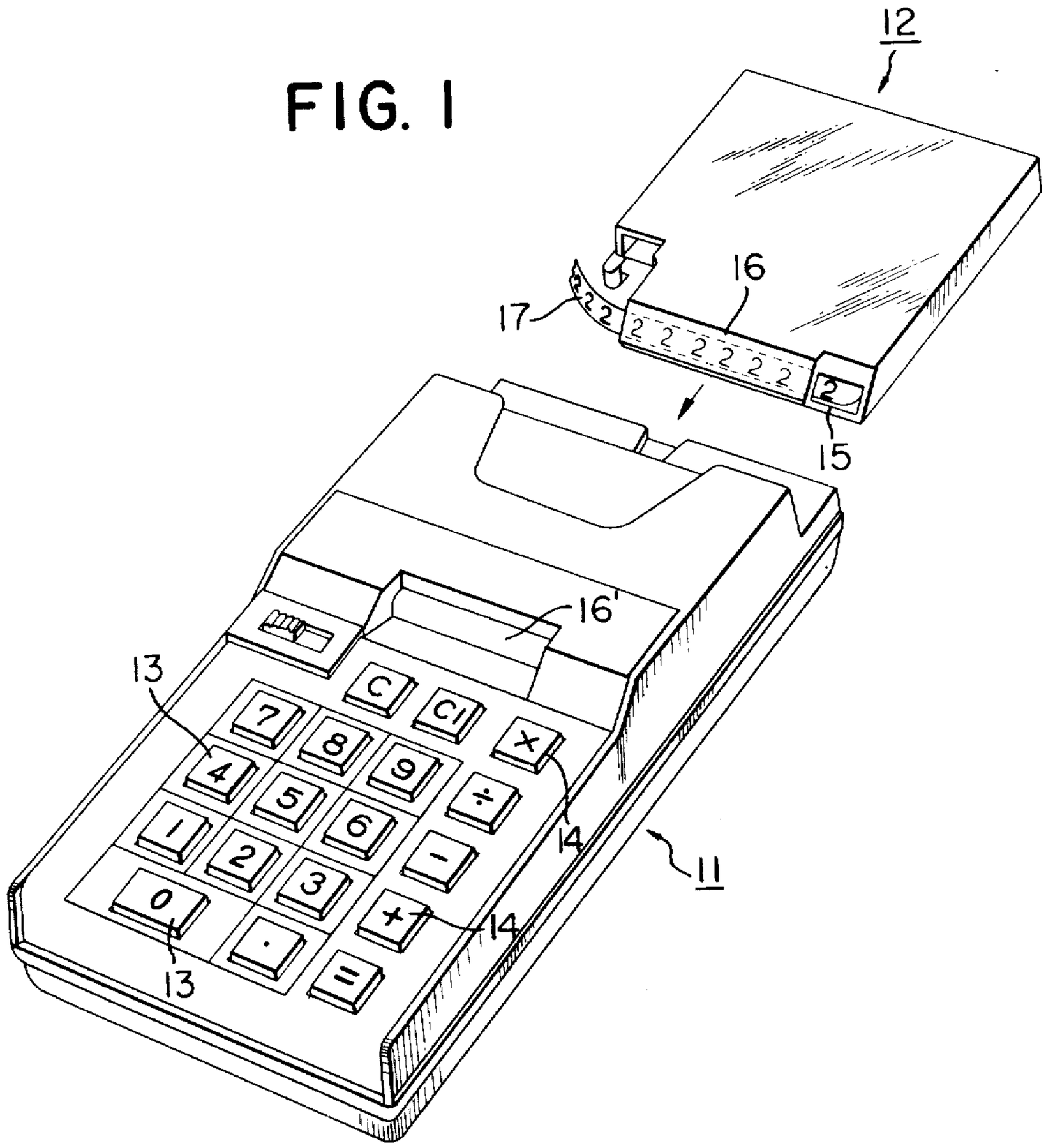

FIG. 2

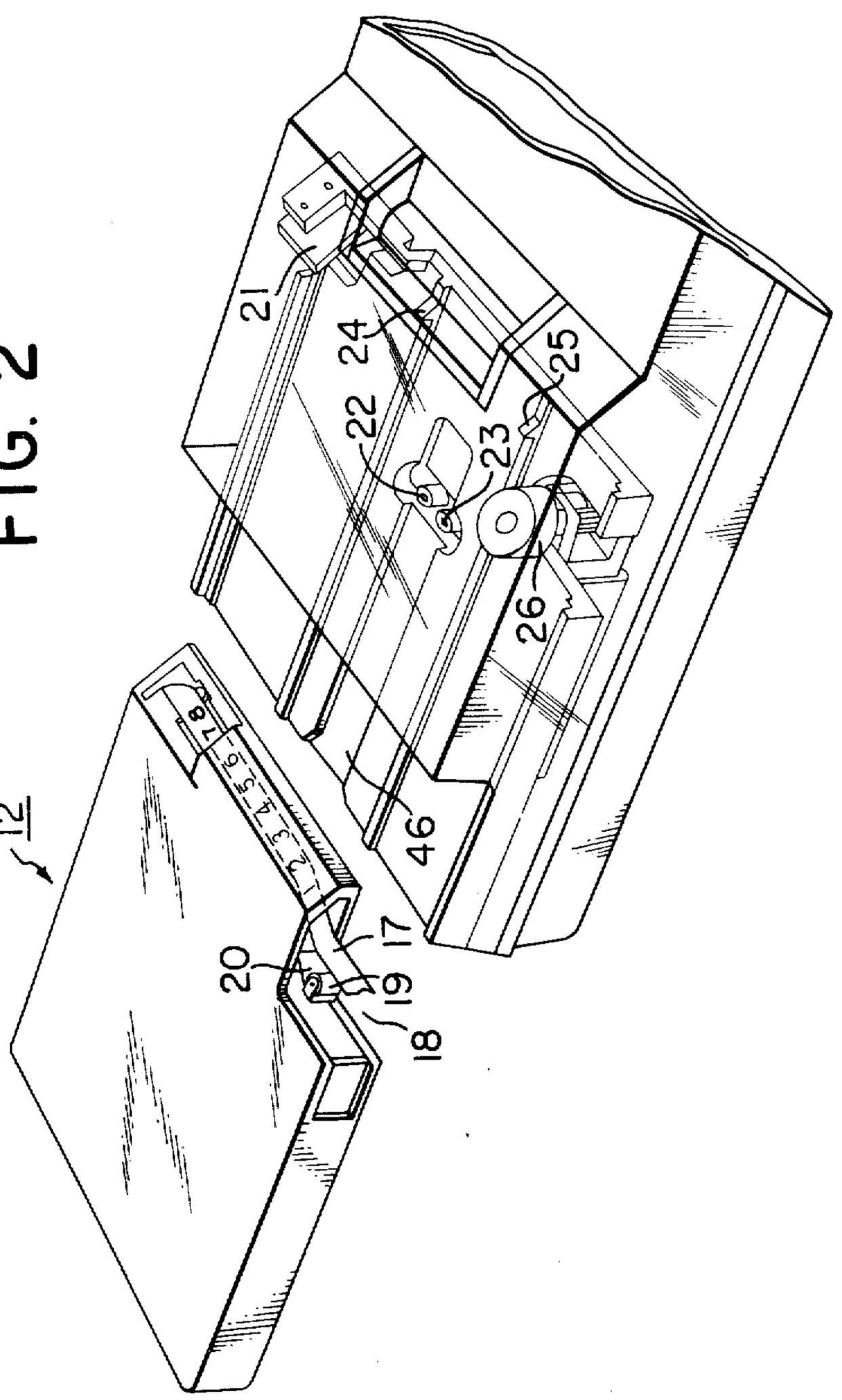

FIG. 5

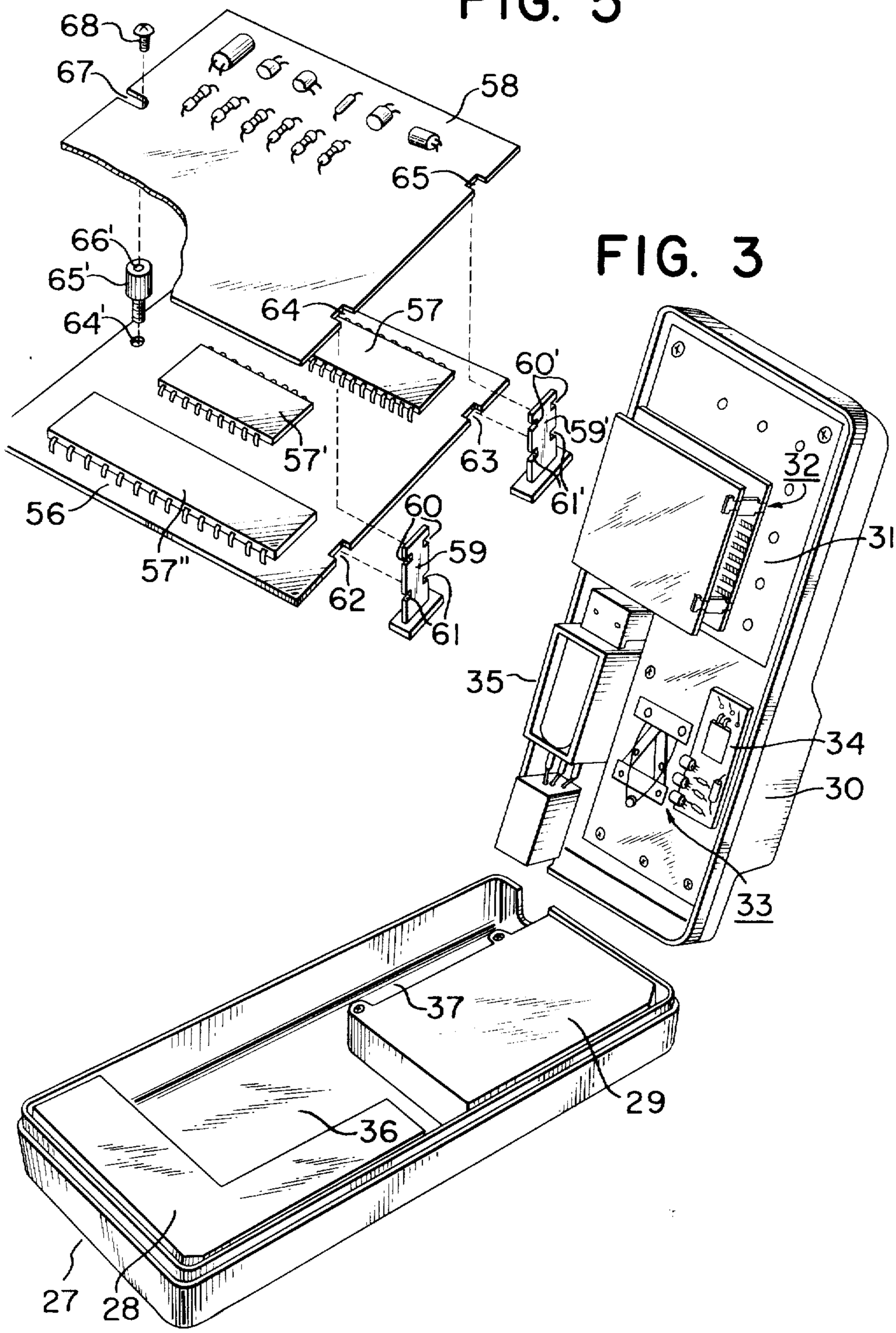
68
67
58
65
66'
65'
64'
64
57
57'
56
57"
62
60
59
61
60'
59'
63
61'
32
31
35
34
30
33
37
29
36
27
28

FIG. 3

FIG. 4

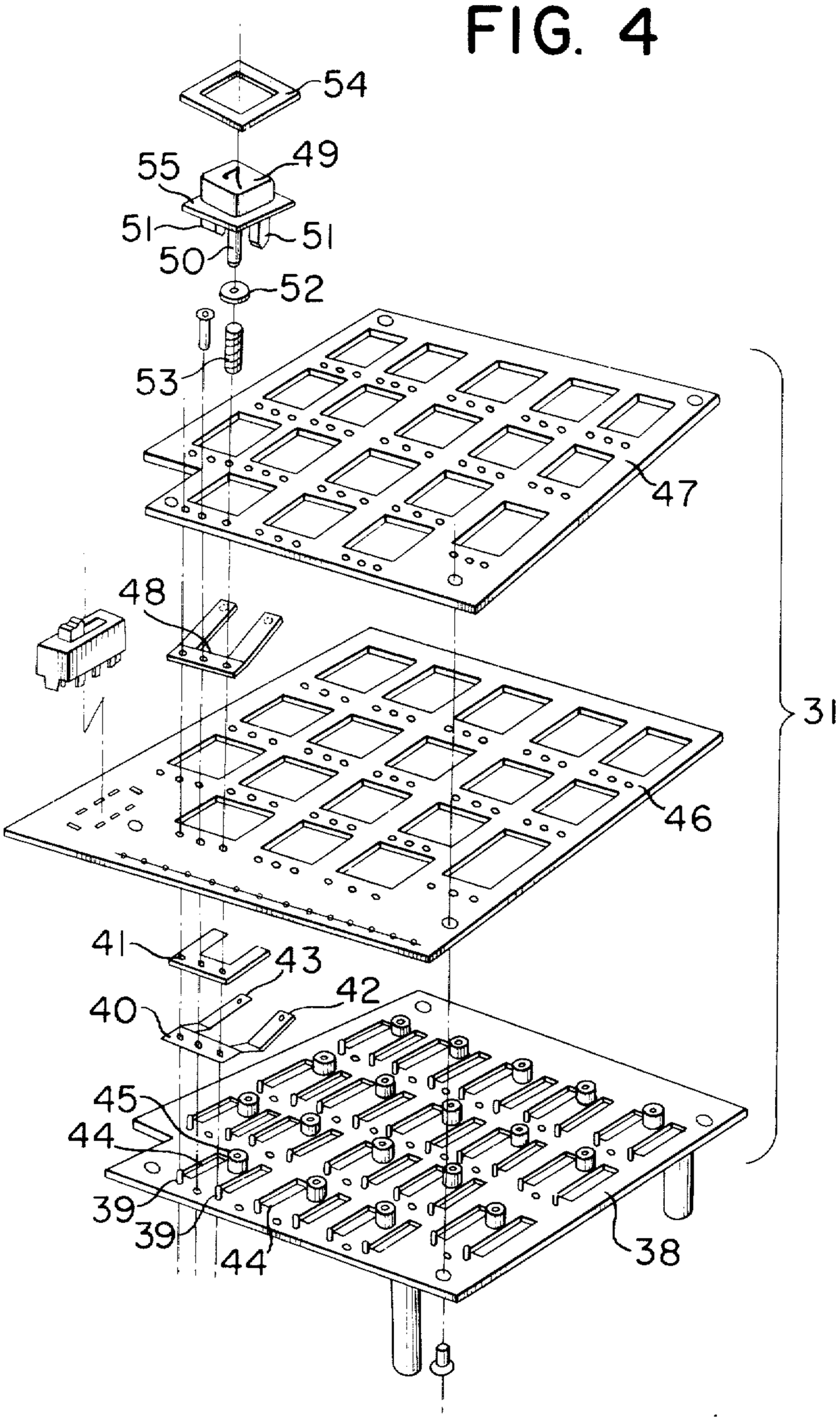

FIG. 6

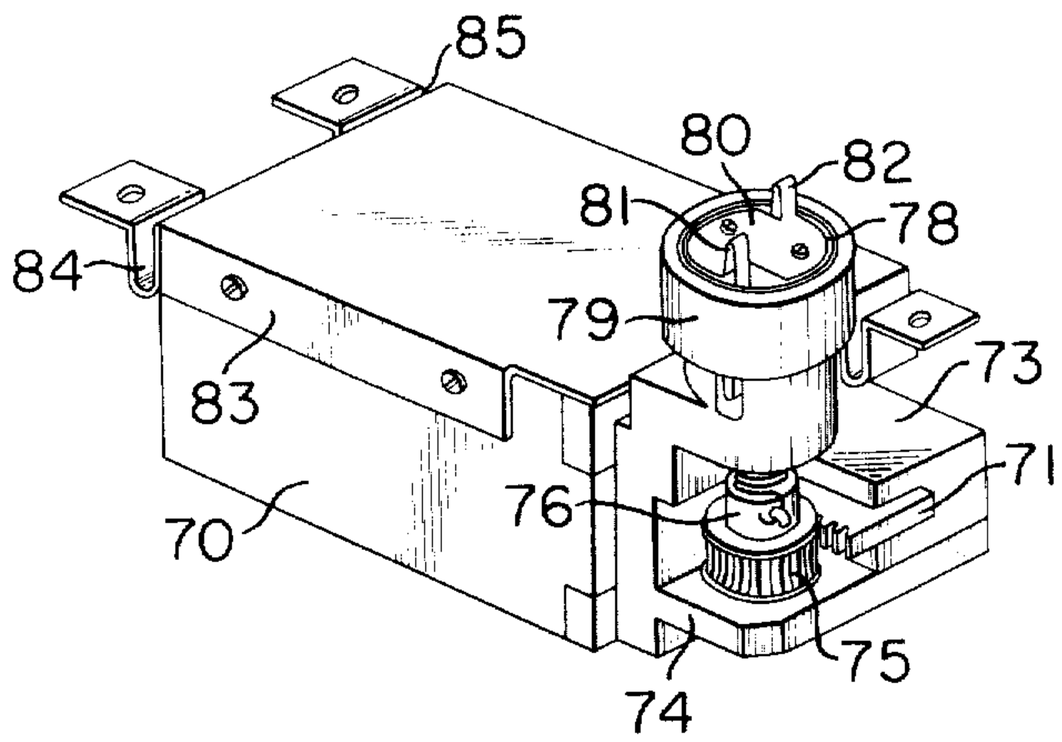

FIG. 7

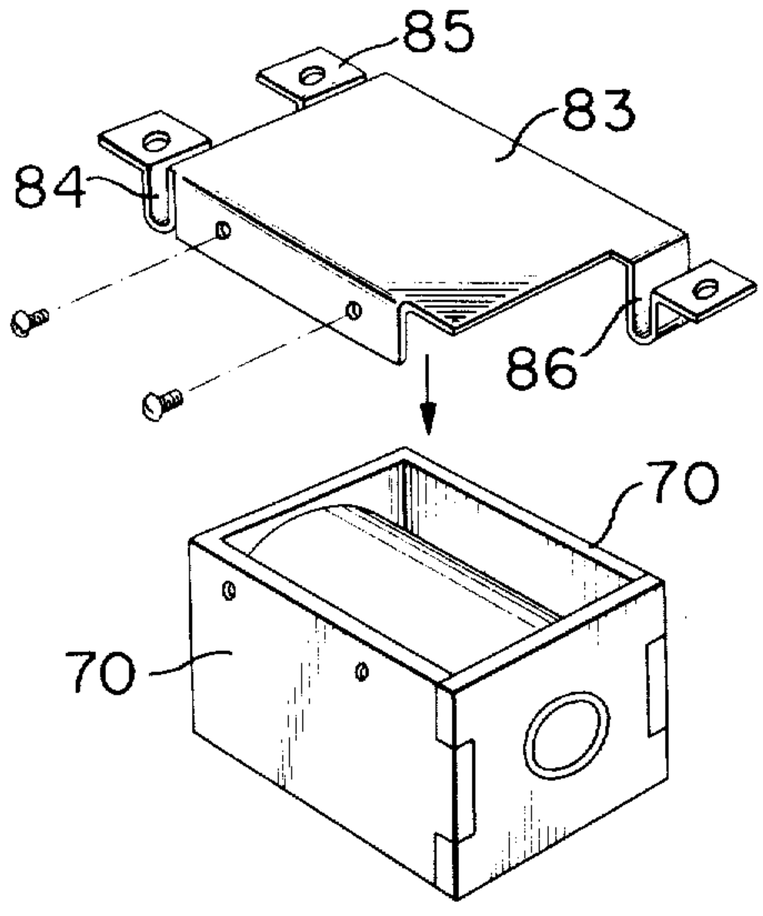

FIG. 8a

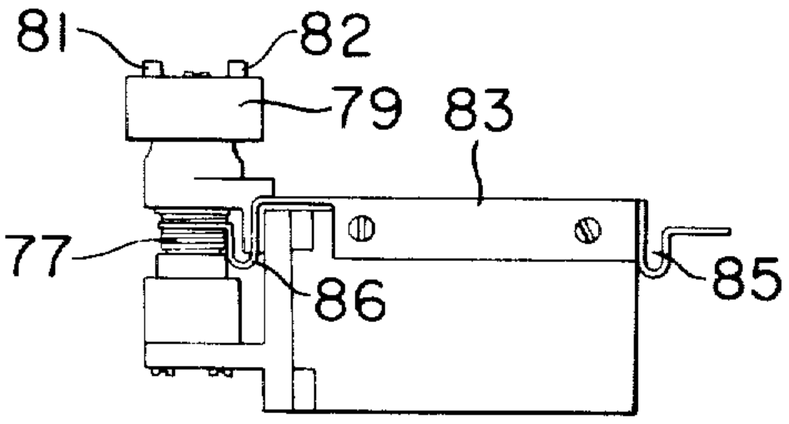

FIG. 8b

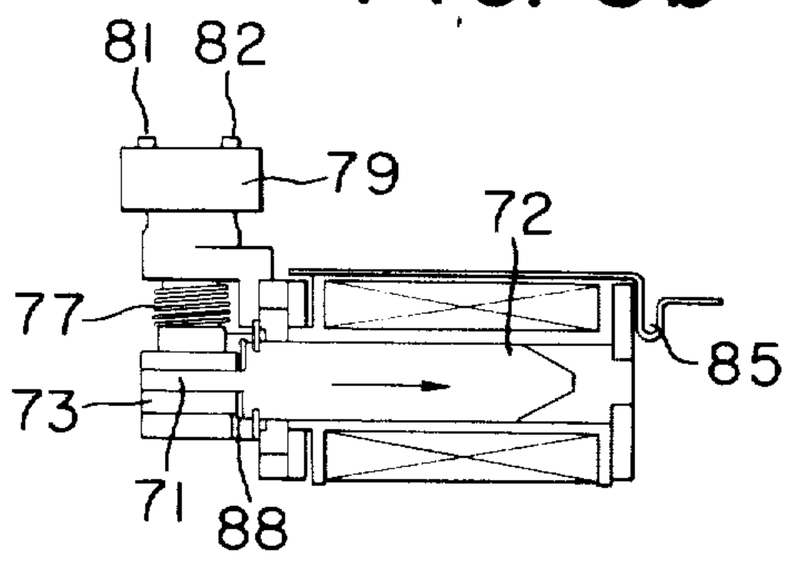

FIG. 9

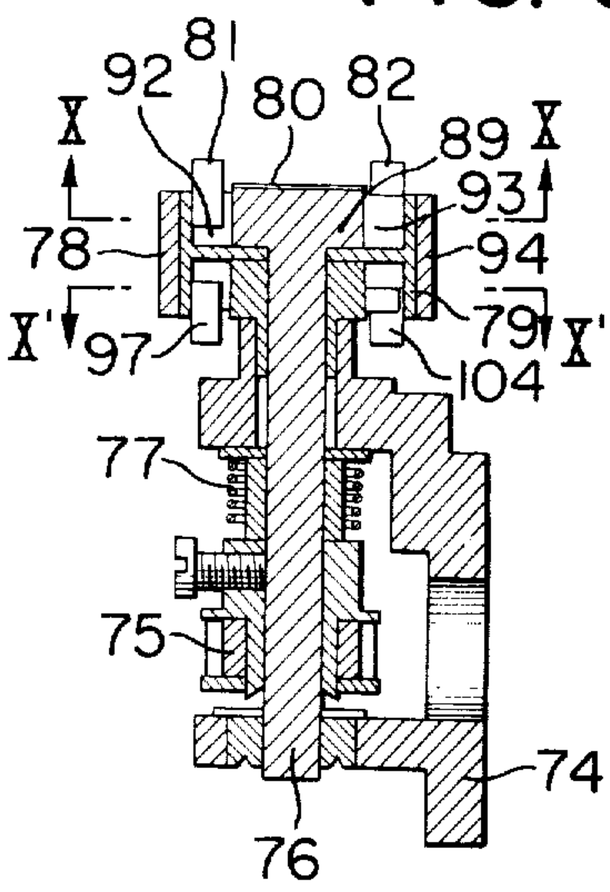

FIG. 10a

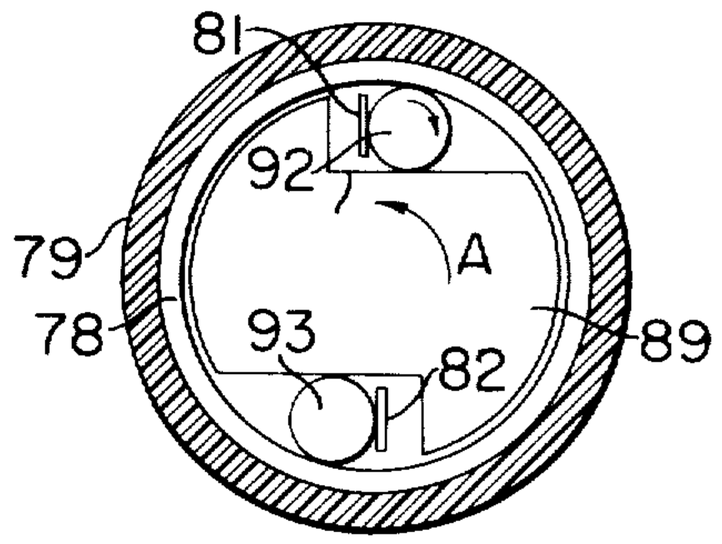

FIG. 10b

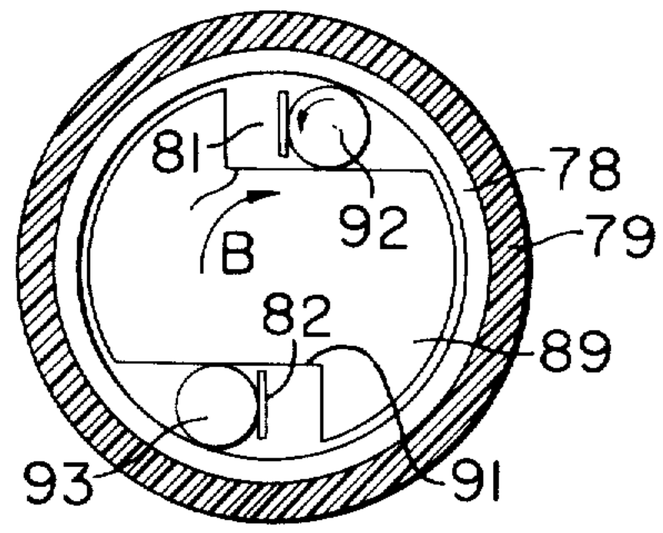

FIG. 10c

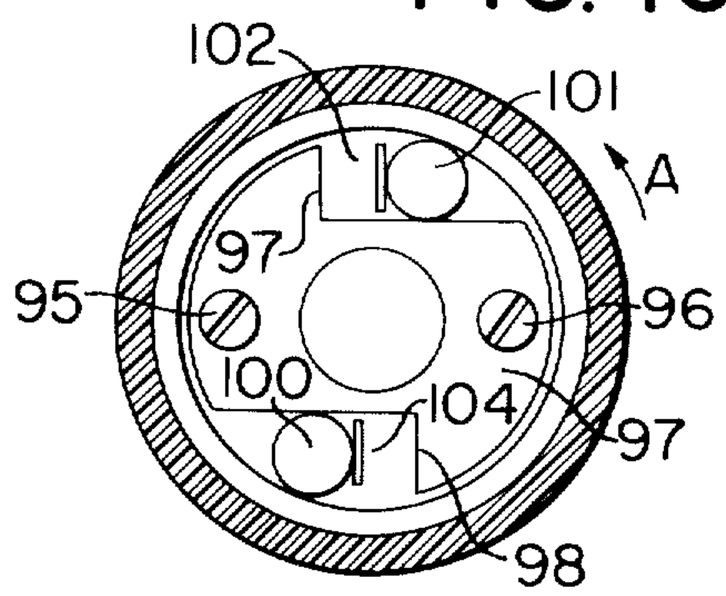

COMPACT ELECTRONIC COMPUTER

BACKGROUND OF THE INVENTION

1. Field of the Invention

This invention relates to a tape driving system, and more particularly to a tape driving system for intermittently driving a tape at high speeds. The invention further relates to a compact electronic computer incorporating such a driving system therein, and more specifically to a compact desk-set electronic computer having a very small height and using a cartridge containing therein a printing tape.

2. Description of the Prior Art

In an instrument such as computer whose outputs can be obtained at a high speed, the output supplied in succession at a considerably high speed must be printed on a tape or printing paper at a speed corresponding to the output speed. For this purpose, a printing head using an electrostatic printer or a mechanical printer may be used which will accomplish the printing at a speed acceptable to a certain degree. However, such a printing mechanism is disadvantageous in that during the high-speed printing the printing tape cannot afford to follow the printing speed of the printing head, thus resulting in difficulties in carrying out the printing at higher speeds than a predetermined level.

A typical arrangement adopted in the conventional printing tape driving system has comprised a ratchet wheel having ratchet teech formed circumferentially thereof, and a reciprocating main drive rod disposed adjacent to the circumference of the ratchet wheel for pushing the ratchet teeth thereof, the main drive rod being driven for each printing operation. In such arrangement, however, a check pawl for preventing the reverse rotation of the ratchet wheel has produced a noise each time it is disengaged form a ratchet tooth to intermittently drive the printing tape, and in addition, the amount of the tape to be fed has been determined by the number of the ratchet teeth, thus allowing no desired variation in the amount of the tape feed. The most fatal defect of the conventional arrangement has been that when the main drive rod is reciprocated at a high speed, it fails to engage the ratchet teeth and thus effects its idle movement, which in turn leads to a failure in a smooth feed of the printing tape.

In any compact electronic computer using a printing tape, it is desirable to eliminate the foregoing drawbacks while making the computer itself compact and readily portable enough to enable various calculations to be effected anywhere as desired.

Such requirement for compactness, however, would be incompatible with the fact that any electronic computer must accommodate in itself various space-consuming units such as operation processing circuit, printer, indicator, drive source, etc. which would necessarily increase the size of the computer. If these units should be accommodated in smaller spaces, it would result either in a lower operability of the machine or a much greater rate of malfunctioning in the operating circuit due to noises which might arise from some other units incorporated therewith and/or other extraneous noises. The present invention seeks to overcome all these drawbacks which have existed in the prior art.

SUMMARY OF THE INVENTION

It is a primary object of the present invention to provide a tape driving system which comprises a rotatably mounted drive shaft, an auxiliary drive shaft loosely fitted around said main drive shaft at the upper end thereof, cam means for providing in said main drive shaft at least one cam portion and defining at least one wedge-shaped space by cooperating with the inner wall of said auxiliary drive shaft, a follower received in said wedge-shaped space, biasing means located to correspond to said follower for urging said follower in a predetermined direction within said wedge-shaped space, and means for reciprocally rotating said main drive shaft, whereby the reciprocal rotation of the main drive shaft may be transmitted as in intermittent rotational movement to the auxiliary drive shaft.

It is another object of the present invention to provide such a tape driving system which further includes a plunger for driving the main drive shaft formed integrally with the main and auxiliary drive shafts so as to together constitute a tape driving unit, and resilient members of a shock absorbing characteristic provided in the direction of movement of a plunger actuator to fix the tape driving unit, whereby any shock imparted by the plunger during the tape feed may be absorbed by the shock absorbing members to thereby eliminate any erroneous tape movement which would otherwise result from such shock. The tape driving unit thus provided can be assembled with high precision.

It is still another object of the present invention to provide an arrangement which will enable a compact construction of an electronic computer incorporating therein the above-described tape driving system.

It is yet another object of the present invention to provide an electronic computer which comprises a keyboard including operation command keys and digit entering keys formed integrally on a printed base plate, a logical operation circuit unit fixed to the underside of the keyboard, batteries disposed to surround the circuit unit, a tape driving system juxtaposed with the keyboard unit, and a cartridge containing therein a printing tape and removably inserted into the computer in juxtaposed relationship with the keyboard unit.

These and other objects and advantages of the present invention will become fully apparent from the following description of some specific embodiments thereof taken in conjunction with the accompanying drawings.

BRIEF DESCRIPTION OF THE DRAWINGS

FIG. **1** is a perspective view of a compact electronic computer according to the present invention and a tape cartridge containing therein a printing tape for use with the computer.

FIG. **2** is a perspective view of the computer and the tape cartridge, the computer being shown partly broken away for illustrating the relationship between the cartridge and the driving system therefor.

FIG. **3** is a perspective view of the computer body as it is separated into two halves to illustrate the interior arrangement of the computer.

FIG. **4** is an exploded perspective view of a thin keyboard for use in the computer body.

FIG. **5** is a perspective view of a printed base plate having mounted thereon LSI's containing a logic circuit, etc. and a printed based plate having other circuit elements mounted thereon.

FIG. **6** is a perspective view of the tape driving system according to the present invention.

FIG. 7 is an exploded perspective view for illustrating the plunger portion of the driving system.

FIG. 8*a* is a side view of the driving system.

FIG. 8*b* is a vertical sectional view of the driving system of FIG. 8*a*.

FIG. 9 is a vertical sectional view of the tape feed mechanism.

FIGS. 10*a* and 10*b* are cross-sectional views of the tape driving roller taken along lines X—X of FIG. 9.

FIG. 10*c* is a cross-sectional view taken along lines X'—X' of FIG. 9.

DESCRIPTION OF THE PREFERRED EMBODIMENTS

Referring to FIG. 1, there is shown a computer body generally designated by 11 and a tape cartridge generally designated by 12 which is to be inserted into the computer body. The computer body 11 contains therein various circuits such as digit entering circuit, operation circuit, display control circuit, etc. and can perform as an independent computer. In the forward upper surface of the computer body 11 there are digit entering keys 13 for entering digital data and function keys 14 for effecting various calculations on such digital data. The tape cartridge 12 contains therein a roll of narrow tape strip wound in the form of a coil and rotatably held so as to be freely unwound. The cartridge 12 has a recess 15 and a viewing section 16 both formed in the front end thereof so that tape 17 unwound from said roll may be imprinted with characters and symbols at the front recess 15 by a thermal head or printing means provided in a portion of the computer body corresponding to the recess 15 as will be described later, and then guided through the viewing section 16 which is generally sloped to enable the information printed on the moving tape to be readily read from outside the cartridge.

A viewing window 16' is provided in a portion of the computer body 11 corresponding to the viewing section 16 of the tape cartridge 12 so that when the cartridge is inserted into the computer body the digital information on the tape 17 moving through the viewing section 16 may be viewed from outside the computer body 11. The viewing window 16' of the computer body is also sloped complmentarily to the viewing section 16 of the cartridge so as to facilitate the read out of the printed information on the tape.

It will thus be seen that the above-described computer is not of the type which has a fixed display means but of the type in which a tape imprinted with information is moved in the cartridge so that the information on the tape may be read as it runs along its path of movement, and thus preservation of such tape provides preservation of the results of the calculations effected by the computer. Moreover, the tape setting may be accomplished simply by inserting the cartridge into the computer.

FIG. 2 shows a lock means for fixing the tape cartridge to the computer body and a drive system for driving the tape contained in the cartridge. The tape cartridge 12 has a cut-away 18 formed in a front corner thereof opposite to the aforesaid recess 15, and a roller 19 is rotatably journalled to a resilient plate 20 which is secured to the cartridge 12 at the cut-away 18. The computer body has an imprinting means 21 located to correspond to the portion of the tape 17 which is exposed at the recess 15 of the cartridge. In the illustrated

embodiment, the imprinting means 21 is a thermal head comprising dots which can be selectively driven widthwise 4 by lengthwise 5. Retaining rollers 22 and 23 are provided in the computer body to hold the tape cartridge 12 once the latter is inserted into the computer. These rollers 22 and 23 are such that when the cartridge is inserted, they are urged toward each other to thereby hold therebetween a lozenge-shaped projection (not shown) formed in the underside of the tape cartridge and lock the cartridge with respect to the computer body. Since such engagement between the lozenge-shaped projection and the retaining rollers 22, 23 would allow the inserted cartridge to further displace forward (rightward as viewed in FIG. 2), stop means 24 and 25 are formed in the computer body for limiting such displacement and positioning the cartridge in place. A driving roller 26 driven from an intermittent drive source (not shown) is provided to intermittently drive the tape 17 as it is nipped between the roller 26 and the roller 19 of the cartridge.

Thus, it will be appreciated that when the tape cartridge 12 is properly inserted into the computer body the portion of the tape 17 which is exposed at the recess 15 is brought into intimate contact with the thermal head 21 and the tape is generally moved intermittently by the intermittently driving roller 26 while being nipped between this roller and the roller 19.

Referring now to FIG. 3, the computer body of FIGS. 1 and 2 is shown divided into two halves so as to illustrate the interior arrangement thereof. A lower housing 27 accommodated therin battery cases 28 and 29, and an upper housing 30 accommodate therein a keyboard 31 and an operation circuit 32 underlying the keyboard and including operating LSI's disposed thereon. The upper housing 30 further accommodates therein a driving mechanism 33 for driving the said two cartridge retaining rollers, and a smaller printed base plate 34. In the remaining portion of the upper housing 30 there is disposed a tape driving system 35.

When the upper and lower housings are assembled together as shown in FIG. 1, the operating unit 23 in the upper housing is positioned in a space 36 formed in the lower housing and the tape driving system 35 is positioned in a space 37 formed in the lower housing.

The construction of the keyboard 31 is clearly shown in FIG. 4. A keyboard base plate 38 has studded therein contact holding pins 39 corresponding to respective keys, and U-shaped contacts 40 and stoppers 41 (each one of which is shown) are to be fitted on said pins 39. The stoppers 41 are superposed on the contacts 40 with the arms of the former engaging the contact arms 42 and 43 of the latter for vertical alignment. In the keyboard base plate 38, slots for receiving therein the contact arms 42 and 43 are formed to correspond to the keys on the base plate 38, and key pin guide cylinders 45 are formed as will be described. A spacer plate 46 is interposed between the base plate 38 and a fixing plate 47, these three plates being laminated one upon another in vertically aligned relationship, with contacts 48 (one of which is shown) being interposed between the plates 46 and 47. The contacts 48 also correspond to the respective keys.

When the three plates 38, 46 and 47 have been laminated in the manner described above, the pins 39 corresponding to the respective keys on the keyboard base plate 38 pass through apertures formed in the insulating base portions of the respective contacts 40, 48 and

then the three plates are fastened together as by set screws. In one form, digit entering keys **49** (one of which is shown) may have a downwardly extending key pin **50** and a downwardly extending contact actuator **51**, both being formed integrally with the keys. The key pin **50** receive thereon a washer **52** and a return spring **53** and then is inserted into a corresponding guide cylinder **45**. A shock absorber **54** is fitted on the flange **55** of the key **49**.

When the base plate **38**, spacer plate **46** and fixing plate **47** are so laminated and fixed to each other with the contacts **40, 48** and stoppers **41** being fixedly interposed therebetween to form a keyboard assembly, each contact **48** interposed and fixed between the spacer plate **46** and the fixing plate **47** is depressed by the contact actuator **51** of each key until it engages the contact **40**.

FIG. **5** shows, in an exploded perspective view, the operation unit **32** comprising two printed base plates and hodler means therefor. One of the printed base plates designated by **56** carries thereon three LSI's **57**, 57′ and **57**″, and the other printed base plate **58** carries thereon semiconductor amplifier elements and non-linear elements such as resistors and capacitors. These two printed base plates must together be attached to the underside of the keyboard **31** in such a manner that these base plates spaced apart from each other. For this purposed, holder means **59** and **59**′ are provided to hold the two printed base plates in a predetermined spaced apart relationship. Each of the holder means **59**, 59′ comprises a stud member having one end thereof secured to the keyboard and formed with reduced or narrowed portions **60, 61** or **60**′, **61**′. In the side edge portions of the printed base plates **56** and **58** which correspond to those reduced portions **60, 61, 60**′ and **61**′ of the holder means **59** and **59**′, there are formed recesses **62, 63, 64** and **65** for receiving the reduced portions **60, 61, 60**′ and **61**′ respectively. In the opposite edge of the printed base plate **56** there is formed an internally threaded hole **64**′ for threadably receiving a partly threaded screw **65**′ to fix the printed base plate **56**. The screw **65**′ has an enlarged upper portion having a length substantially equal to the length defined between the reduced portions **60** and **61** or **60**′ and **61**′, and the enlarged portion of the screw **65**′ has an internally threaded bore **66**′ formed axially therein. At a point in the side edge of the other printed base plate **58** corresponding to the screw **65**′, there is formed a slit **67** through which a screw **68** may be passed and threaded into the internally threaded axial bore **66**′ of the screw **65**′ so as to fix the printed base plate **58** with respect to the base plate **56**.

Thus, in order to fix these two printed base plates **56** and **58** to each other in spaced apart relationship, the recesses **62** and **63** of the printed base plate **56** may first be engaged with the respective reduced portion **61** and **61**′ of the stud members **59** and **59**′, whereafter the screw **65**′ may be threaded into the hole **64**, then the recesses **64** and **65** of the other printed base plate **58** may be engaged with the reduced portions **60** and **60**′ and finally the screw **68** is threaded into the threaded bore **66**′ of the screw **65**′ through the slit **67** in the plate **58**.

Referring to FIGS. **6** to **10**, the aforesaid tape driving system is shown in greater detail. In front of a plunger actuator **70**, there is a rack **71** formed at the forward end portion of a plunger actuator **72**. An arm **73** for holding the rack **71** is secured to a base plate **74**. A gear **75** meshing with the rack **71** is mounted on a main drive shaft **76** for rotation therewith. A return spring **77** is provided to normally bias the main drive shaft **76** for clockwise rotation. An auxiliary drive shaft **78** is loosely fitted on the main drive shaft **78** in a manner to be described, and it has a one-way rotation mechanism mounted on its inner side wall. A driving roller **79** formed of rubber is mounted around the auxiliary drive shaft **78**, and a resilient disc **80** is secured to the main drive shaft, the disc being formed with springs **81** and **82** for resiliently pressing followers which will be described later. A unit fixing plate **83** formed of a resilient material is secured to the top of the plunger case **70** and has fixed mounting arms **84, 85** and **86** of a U-shaped cross-section which are capable of absorbing any shock imparted thereto by the reciprocation of the plunger actuator **72**. The base plate **74** is secured to the plunger case **70** and formed integrally with the plunger and the driving roller **79**, thereby forming a part of the tape driving system. A shock absorbing member **88** formed of rubber or like material is fitted to the base of the rack **71** extending from the plunger actuator **72**, so as to absorb any shock imparted by the actuator **72** when the latter is returned by the force of the spring **77** and strikes the holding arm **73**.

As shown in FIG. **10***a*, a cam **89** is formed below the resilient disc **80** and at the upper end of the main drive shaft **76**. The cam **89** is formed with cam portions **90** and **91** for receiving therein cylindrical followers **92** and **93** respectively. The spring arms **81** and **82** formed on the resilient disc **80** bear against the cylindrical surface of the respective followers **92** and **93** to bias these followers toward the inner side wall of the auxiliary drive shaft **78**. Thus, when the main drive shaft **76** is rotated in the direction indicated by arrow A to drive the cam **89** to rotate in the same direction, the followers **92** and **93** will be trapped in the wedge-shaped spaces defined between the cam portions **90, 91** and the inner wall of the auxiliary drive shaft **78**, which will thus be rotated also in the direction of the arrow A. If the main drive shaft **76** is rotated in the direction opposite B to that indicated by the arrow A, the cam **89** will also be rotated in such opposite direction to cause the spring arms **81** and **82** to follow the rotation of the cam, whereby the spring arms **81** and **82** will force the followers **92** and **93** to follow only the cam **89** along the cam portions **90** and **91**, thus releasing the operative engagement between the main and auxiliary drive shafts **76** and **78** (See FIG. **10***b*).

The auxiliary drive shaft **78** is further formed with intermediate wall surface **94** (FIG. **9**), beneath which is disposed a cam **97** loosely concentrically with the main drive shaft **7** and fixed by screws **95** and **96**.

The cam **97** has two symmetrical cam portions **98** and **99** which are similar to those of the cam **89**, and cylindrical followers **100** and **101** are received in these cam portions **98** and **99** respectively. When the cam **97** is fixed to the base plate **74**, a resilient pressure plate **102** similar in shape to the resilient disc **80** is fixed integrally to the fixed base of the cam **97** and the followers **100** amd **101** are resiliently pressed by springs **103** and **104** in the same way as the followers **92** and **93**, as shown in FIG. **10***c*. Therefore, when the cam **89** on the main drive shaft **76** is rotated in the direction of arrow A, the auxiliary drive shaft **78** will also be rotated in the same direction so that the followers **100** and **101** in the

cam **97** secured to the underside of the cam **89** are rotated within the inner wall of the shaft **78** and forced out of the wedge-shaped spaces defined by the inner wall of the auxiliary drive shaft **78** and the cam portions **98, 99** of the cam **97** so as to bear against the spring arms **103** and **104.** In this way, the rotation of the main drive shaft **76** in the direction A may be transmitted to the auxiliary drive shaft **78.**

When the main drive shaft **76** is rotated in the direction B opposite to the direction A, the auxiliary drive shaft **78** is prevented from following the rotation of the cam **89** because the followers **100** and **101** therebelow are then trapped in the wedge-shaped spaces defined by the cam portions **98** and **99** of the cam **97** and the inner wall of the auxiliary drive shaft **78,** which is thus immovably fixed to the cam **97** by the followers **100** and **101.** On the other hand, the cam **89** and accordingly the main drive shaft **76** may be rotated while the spring arms **81** and **82** thereof are pressing the followers **92** and **93.**

From the foregoing it will be appreciated that the different pairs of followers resiliently pressed in the same direction allow the auxiliary drive shaft **78** to rotate only in the direction A in response to the reciprocal rotation of the main drive shaft **76,** but the rotation of the auxiliary drive shft **78** in the direction B is prevented due to the followers trapped in the wedge-shaped spaces.

Assuming that an operator has forced the tape cartridge into the computer body through the cartridge receiving opening therein, the lozenge-shaped projection in the underside of the tape cartridge is held by and between the retaining rollers **22** and **23** and the tape cartridge is thus retained in a position where it is urged toward the display window of the computer body with the tape brought into intimate contact with the thermal head **21** and nipped between the tape driving roller **26** and the roller **19** of the cartridge. Thereafter, a power switch (not shown) may be closed to allow an operation to be effected by depressing desired digit entering keys and function keys. The operated digits and the results of the operation will be applied one by one from the operating unit to the thermal head **21.**

In response thereto, an operating current flows into the plunger in the tape driving system so that the actuator **72** is attracted against the force of the spring **77** in the direction as indicated by **P** in FIG. **8***b*. As a result, the gear **75** is rotated counter-clockwise to cause the main drive shaft **76** to rotate in the direction A. As described above, such rotation of the main drive shaft **76** in the direction A causes the auxiliary drive shaft **78** to be rotated in the same direction due to the followers **92** and **93** being then fitted in the wedge-shaped spaces defined by the cam **89** and the inner wall of the auxiliary drive shaft **78,** so that the printing tape in the cartridge is driven to move only a distance corresponding to one impressed character. Subsequently, when a printing current flows into the thermal head **21,** the plunger operating current is cut off to allow the actuator **72** to be returned in the direction opposite to the direction P by the return spring **77** wound around the main drive shaft **76.** The actuator **72** strikes the end of the rack holding arm **73,** but the shock arising therefrom is absorbed by the shock absorber **88** fitted to the actuator **72** and by the resilient U-shaped arms **84–86.**

For the return movement of the actuator **72** or the reverse rotation of the main drive shaft **76** in the direction B, the auxiliary drive shaft **78** is prevented from rotating by the cooperation between the cam **97** and associated followers **100, 101,** thus resulting in idle rotation of the main drive shaft **76** alone and no movement of the tape.

In this way, the tape driving system drives to move the tape a distance corresponding to one impressed character each time printing is effected by the printing head.

As has been described above, the tape driving system of the present invention effects intermittent one-way rotation with the aid of the wedge-like engagement and disengagement between the upper and lower cams and their associated followers disposed within the auxiliary drive shaft, and perfectly prevents the reverse rotation of the driving roller. Moreover, there is required only a small space for accommodating such driving system. Thus, the tape feed can take place reliably and smoothly always for a predetermined amount and without any undesirable noise, and such smooth operation can also be achieved at high speeds because the followers are forcibly engaged and disengaged with the wedge-shaped traps defined by the cams and the inner wall of the main drive shaft. Furthermore, the shock absorbers used with the tape driving system are disposed in the direction of movement of the plunger actuator to perfectly absorb any shock imparted from the plunger, thereby eliminating any malfunctioning such as erroneous feed of the tape which would otherwise result from such shock and enabling high-speed feed of the tape.

We claim:

1. A one-way drive device comprising:

a main drive shaft rotatably housed in the stationary portion of said device,

an auxiliary drive shaft loosely fitted around said main drive shaft,

said main drive shaft having at least one cam portion in the form of a wedge shape so that the direction of approach of said cam portion to the inner wall of said auxiliary drive shaft is in coincidence with one direction of rotation of said main drive shaft,

follower means incorporated in said wedge shaped portion,

first urging means for urging said follower means in abutment therewith toward said one direction of rotation of said main drive shaft within said wedge shaped portion,

said stationary portion having at least one cam portion in the form of a wedge shape so that the direction of approach of said stationary cam portion to the inner wall of said auxiliary drive shaft is in coincidence with the direction opposite to said one direction of rotation of said main drive shaft,

follower means incorporated in said stationary wedge shaped portion,

second urging means for urging said follower in abutment therewith toward said direction opposite to said one direction of rotation of said main drive shaft within said stationary wedge shaped portion, and

means for driving said main drive shaft in said one direction and in said direction opposite thereto.

2. A one-way drive device according to claim **1,** wherein said first urging means comprises a spring arm formed integrally with a resilient disc secured on one end of said main drive shaft.

3. A one-way drive device according to claim 1, wherein said second urging means comprises a stationary spring arm formed integrally with a resilient disc secured on said stationary portion.

4. A one-way drive device according to claim 2, wherein said second urging means comprises a stationary spring arm formed integrally with a resilient disc secured on said stationary portion.

5. A one-way drive device according to claim 1, said device further comprises a gear secured on said main drive shaft, a coil spring one end of which is secured on said main drive shaft and other end on said stationary portion, and a rack associated with a plunger armature and meshed with said gear, wherein urging direction of said coil spring and said plunger armature being opposite each other.

6. A one-way drive device according to claim 5, wherein said device is integrated in a body to form a unit and said unit carries a retaining means made of resilient material for affording sufficient mitigation of shock to be supplied in the direction of said plunger armature reciprocation.

* * * * *