United States Patent [19]

Mandelbaum et al.

[11] **3,836,282**

[45] **Sept. 17, 1974**

[54] **STATOR VANE SUPPORT AND CONSTRUCTION THEREOF**

[75] Inventors: **William Mandelbaum,** Bloomfield; **John A. Violette,** Granby, both of Conn.

[73] Assignee: **United Aircraft Corporation,** East Hartford, Conn.

[22] Filed: **Mar. 28, 1973**

[21] Appl. No.: **345,808**

[52] **U.S. Cl.** **415/217,** 416/500

[51] **Int. Cl.** **F01d 5/10**

[58] **Field of Search** 415/217, 218, 135, 136, 415/137, 190, 189, 191; 416/220; 418/500

[56] **References Cited**

UNITED STATES PATENTS

2,914,300	11/1959	Sayre	415/135
3,291,382	12/1966	Blackhurst et al.	415/217
3,708,242	1/1973	Bruneau et al.	415/217

FOREIGN PATENTS OR APPLICATIONS

1,025,421	3/1958	Germany	416/220

Primary Examiner—Henry F. Raduazo
Attorney, Agent, or Firm—Norman Friedland

[57] **ABSTRACT**

A deformable and expandable metal support formed from a thin sheet metal mounted between the stator or fixed vane and the wall of the complementary recess formed in the engine casing or shroud provides an interference fit for supporting the vane therein. A plurality of spaced elongated stamped-out depressions spaced chordwise relative to the vane and extending into the slot formed in the support structure carry a lead-in ramp and by virtue of press fitting therein said depressions are expanded laterally and deformed and when in the deformed condition provide a stiff zero clearance joint.

4 Claims, 4 Drawing Figures

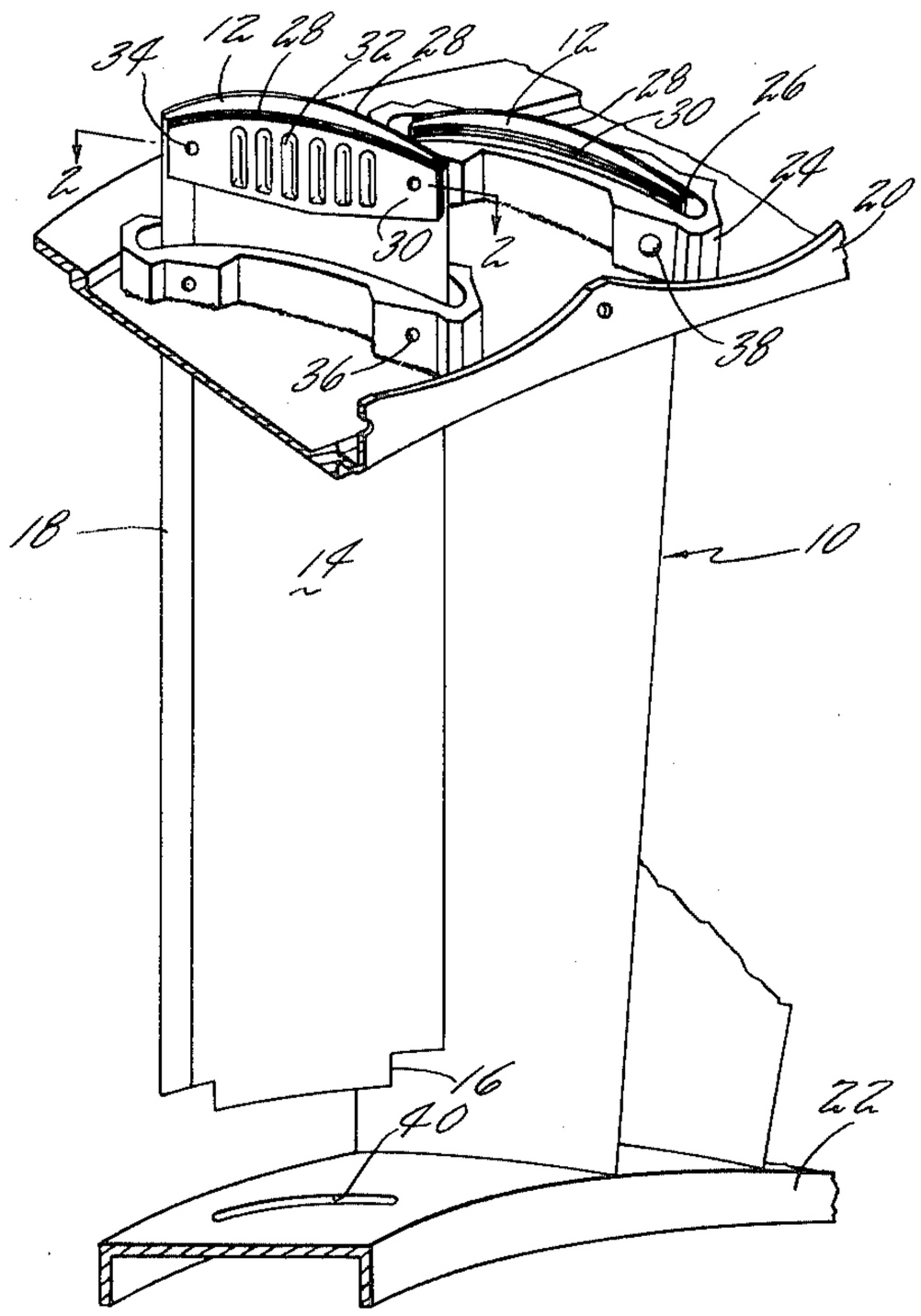

FIG. 1

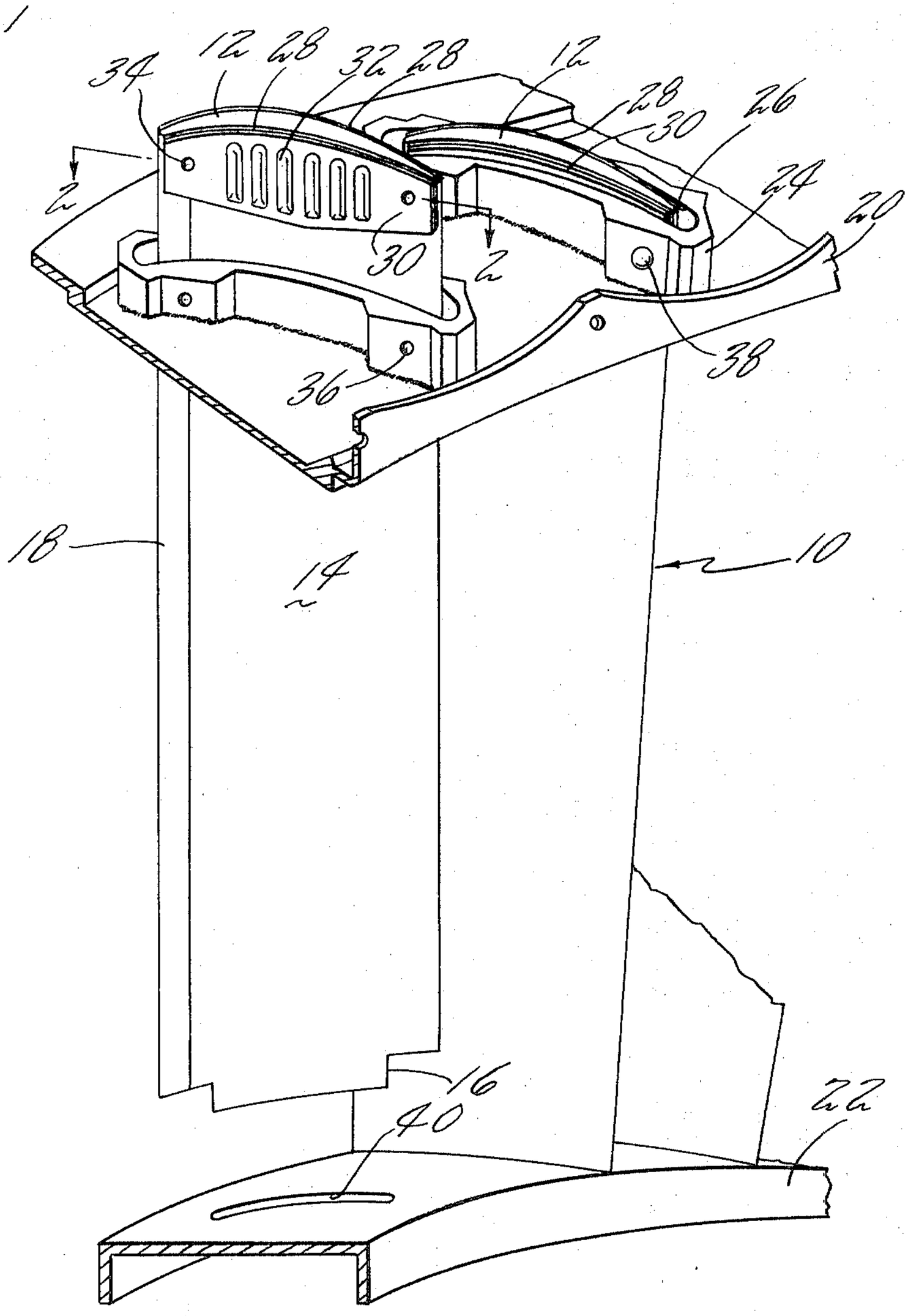

FIG. 2

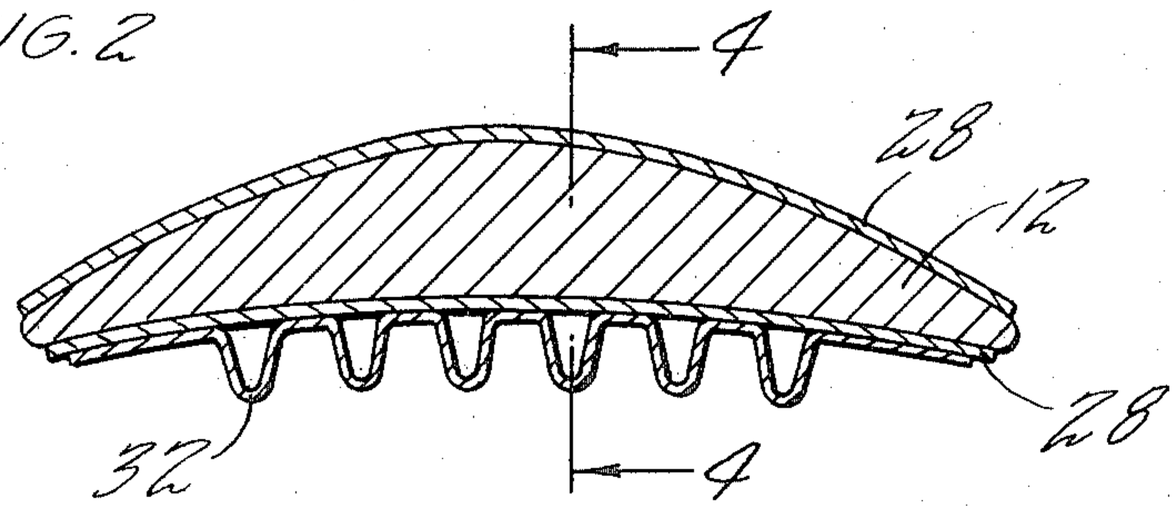

FIG. 3

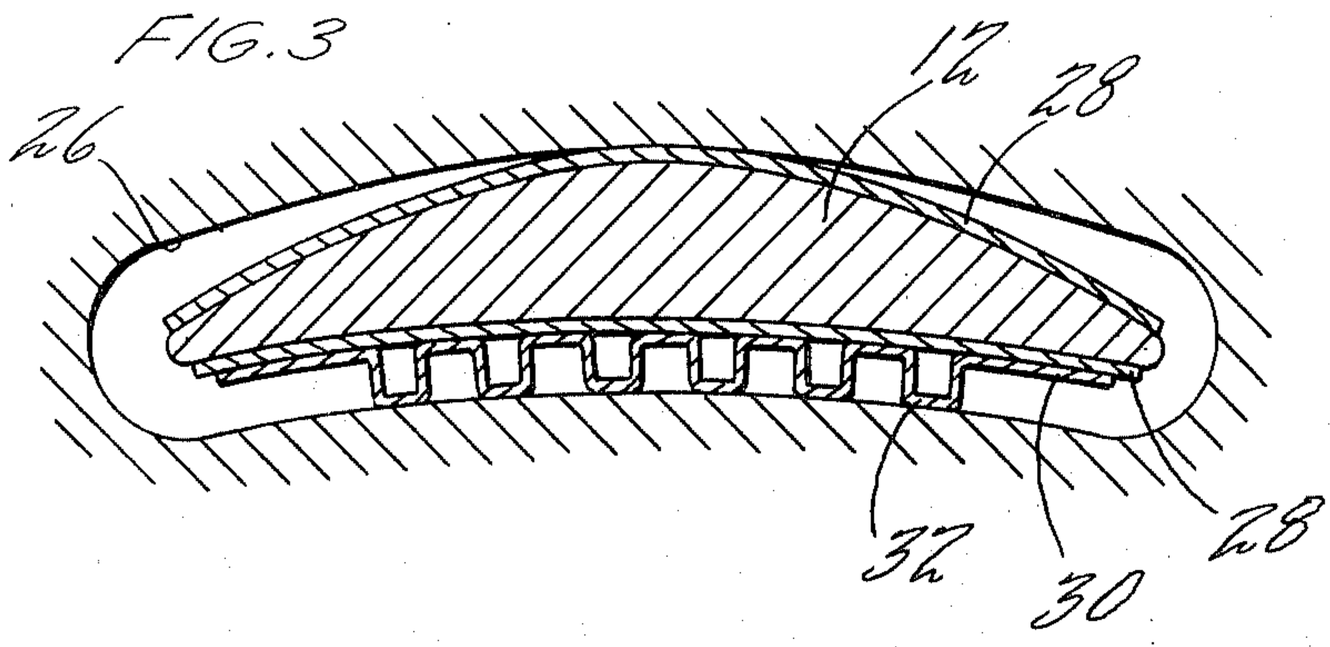

FIG. 4

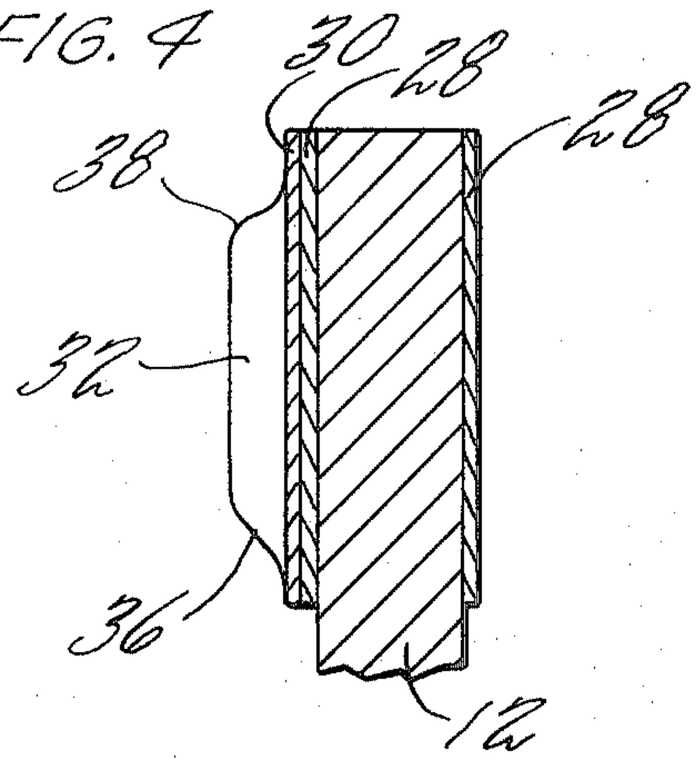

STATOR VANE SUPPORT AND CONSTRUCTION THEREOF

BACKGROUND OF THE INVENTION

This invention relates to fixed or stator vanes of the type that are utilized with aircraft engines or propulsors and particularly to means for supporting the vanes to the engine casing or other support member.

The problem solved by this invention is the inclusion of means for assuring an interference fit between the vane assembly and the engine case. While the invention will be described in its preferred embodiment as being a stator vane for the compressor of a turbine power plant, it will be understood that this invention is contemplated for use with any fixed vane. Whether the vane is inserted directly in the casing or in a shroud which in turn is supported to the casing, the problems are identical and what is deemed important is that the support adequately withstands the load created by the air loading on the vane.

Most important is that the corrugated support absorbs most of the deformation required for a press fit without introducing a prestress in the vane proper. Such a prestress condition is especially undesirable when lightweight hollow structures of titanium or composite material are to be employed in vane construction.

Heretofore the method of installing the vane, aside from welding or constructing an integral end on it, was to allow a chordwise deformation through the vane proper. The end part of the vane which engaged the slot was required to uncamber, much like a leaf spring loaded at the center of the low-pressure side and resisted at the leading and trailing edges of the high pressure side. Considerable deformation of the airfoil was necessary to absorb variations in tolerances as well as to provide sufficient retention stiffness. This deformation adversely affected the working airfoils of adjacent stations and introduced additional stress at the supporting end of the vane.

Inasmuch as the vane in the assembled condition is tantamount to a cantilever beam and the critical stress area is at the junction point where the supporting end interfaces with the slot in the casing and obviously is subjected to the high air loadings on the vane, the junction should not be prestressed. The boron composite materials are known for their high stiffness so this problem of prestressing this critical area is even more acute.

I have found that I can obviate the problems noted above and provide a means for obtaining an interference fit of the stator vane assembly and prevent prestressing the vane at any point by mounting a metal support on the side at the end of the vane to be inserted in the engine case which support comprises a plurality of stamped-out elongated depressions spaced along the vanes in the chordwise direction which depressions are deformable when fitted into its retaining slot.

SUMMARY OF THE INVENTION

It is an object of this invention to provide for a stator vane assembly means for obtaining an interference fit.

A still further object of this invention is to provide for a fixed or stator vane assembly support means which comprise a stamped-out sheet metal member extending

along the chordwise direction of the vane having a plurality of depression spaced in chordwise direction and deform when inserted into the retaining slot to provide a stiff joint.

A still further object of this invention is to provide means for obtaining an interference fit for a fixed vane including a thin metal member having a plurality of depressions stamped therein which are expandable and deformable when inserted into the retaining slot and is characterized by the fact that it prevents loss of load carrying capacity of airfoil structure, a stiff zero clearance joint remains even at high temperatures and the configuration allows for good flexibility in accomplishing a range of interference fits.

Other features and advantages will be apparent from the specification and claims and from the accompanying drawings which illustrate an embodiment of the invention.

BRIEF DESCRIPTION OF THE DRAWINGS

FIG. 1 is a perspective view partly in section illustrating a vane in a mounted and another in an unmounted position.

FIG. 2 is a sectional view taken along line 2—2 of FIG. 1.

FIG. 3 is a sectional view showing the deformation of the metal support when inserted into the slot and

FIG. 4 is a view partly in section and partly in elevation showing the configuration of one of the depressions in the metal support.

DESCRIPTION OF THE PREFERRED EMBODIMENT

Reference is now made to FIGS. 1–4 illustrating the details of this invention. As shown in FIG. 1 the vane generally illustrated by numeral 10 comprises a support section 12 an airfoil section 14 and a tang 16 and a plurality of them are circumferentially spaced to provide a guide path for the air passing therethrough. A metal sheath 18 may be secured to the leading edge which is generally provided in vanes that are constructed from a composite material such as Borsic^{TM} aluminum, boron epoxy and the like. Each vane is supported in either engine casing or shroud member 20 and the annular ring 22. The casing 20 carries a plurality of bosses 24 having a suitable slot 26 formed therein to suitably contour to receive the outboard section of the blade 14. In certain applications as shown in these Figures, it may be desirable to attach a rigid metal member 28 to the top and bottom faces at the support section of the vane 14.

In accordance with this invention the slightly contoured metal support member 30 complements the face of the vane and extends in a chordwise direction of the vane and fits between the space provided between the vane face and the wall of slot 26. A plurality of depressions 32 extending radially outward toward the wall of the slot are stamped in the metal support and are constructed so that they deform and expand in a chordwise direction when inserted into the slot. Rivet holes 34 preferably formed therein are aligned with the rivet holes 36 formed in the boss and restrained from further chordwise expansion by rivet 38 when in the assembled position. Also the rivets prevent the vanes from cocking or rocking edgewise in the slot. Alternatively, the assembly may be drilled and riveted when in place.

It will be noted that in this installation tangs **16** fit the complementary slot **40** formed in the annular ring member **22.** It may be desirable in certain applications to include a similar constraint member in place of the tangs. Also it is contemplated within the scope of the invention that the slots or recesses are grooved to accommodate the depression where the grooves in the configuration would be sized to deform the depression in the metal support.

As can be seen in FIG. **4** each depression **32** is contoured such that the lead-in end **36** is ramped to serve as a guide and facilitate press fitting the vane assembly into the slot **26.** The opposite end **38** is also contoured to take up the load at this end incurred by the blade loading. In the event that the vane is fitted in the slot from the other direction, as would be obvious, this end would become the lead-in end and a similar ramp would be provided.

It should be understood that the invention is not limited to the particular embodiments shown and described herein, but that various changes and modifications may be made without departing from the spirit or scope of this novel concept as defined by the following claims.

We claim:

1. Means for forming a joint for a fixed vane mounted in a shroud, said means including a sheet metal member having opposing side surfaces, a plurality of spaced elongated closed ended stamped-out depressions extending radially from one of said side surfaces and the other of said side surfaces being contiguous with the face of said fixed vane on one end, said disc having bass means defining a slot for receiving said one end of the fixed vane, the said one end together with said sheet metal member interference fitted into said slot whereby said depressions expand in a chordwise direction relative to the vane forming with bass means the stiff joint and absorbing the aerodynamic loading.

2. A vane construction as claimed in claim **1** wherein the end of the depression is sized and shaped to define ramp surface to facilitate the insertion of the vane within the slot.

3. Means for forming a joint as claimed in claim **1** including means for securing said sheet metal to said vane.

4. A vane construction as claimed in claim **3** wherein said securing means includes rivets extending through said bass means.

* * * * *