ALKALI METAL DESULFURIZATION PROCESS FOR PETROLEUM OIL STOCKS

Filed May 24, 1972 2 Sheets-Sheet 1

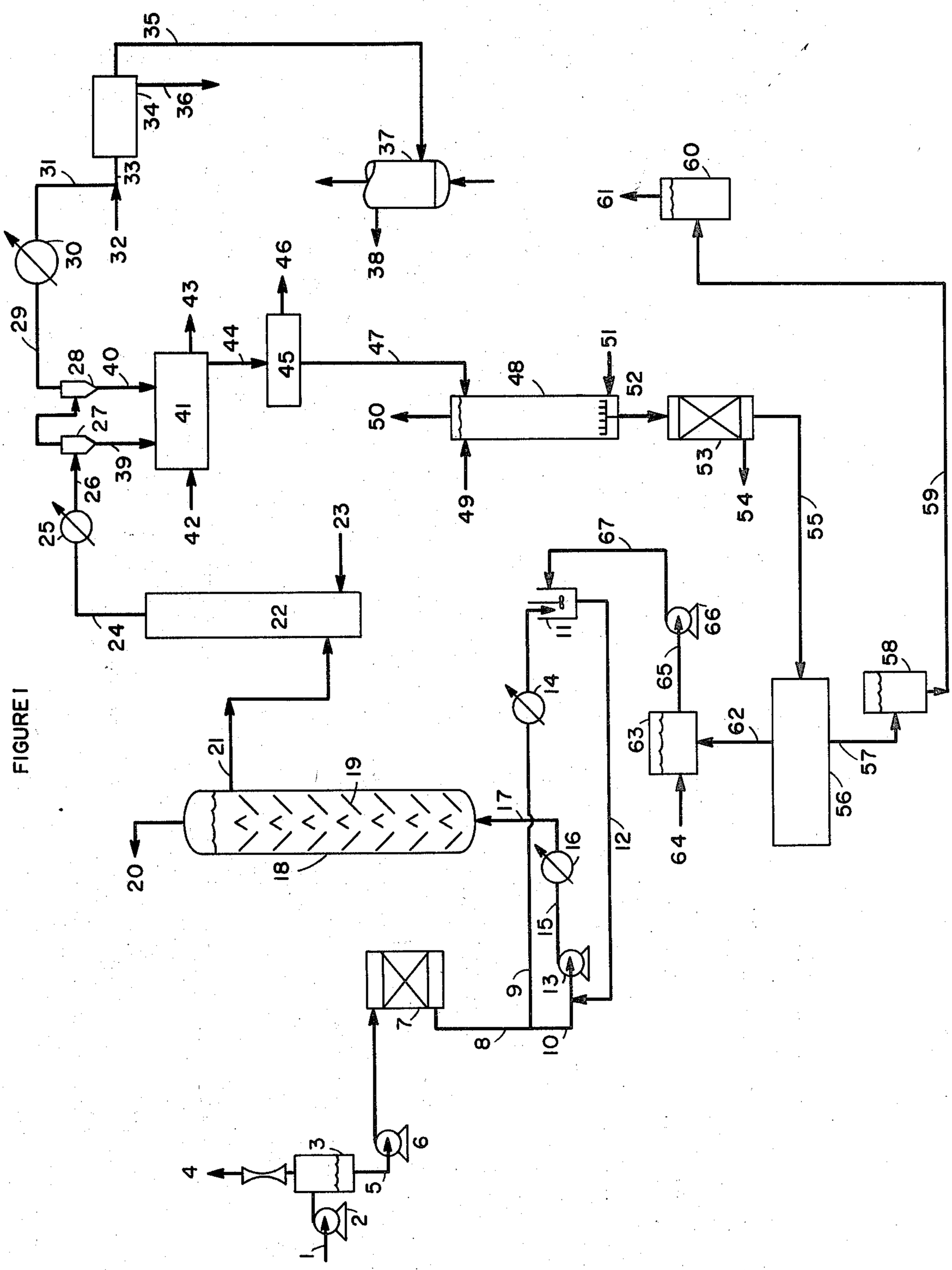

FIGURE I

ALKALI METAL DESULFURIZATION PROCESS FOR PETROLEUM OIL STOCKS

Filed May 24, 1972 2 Sheets-Sheet 2

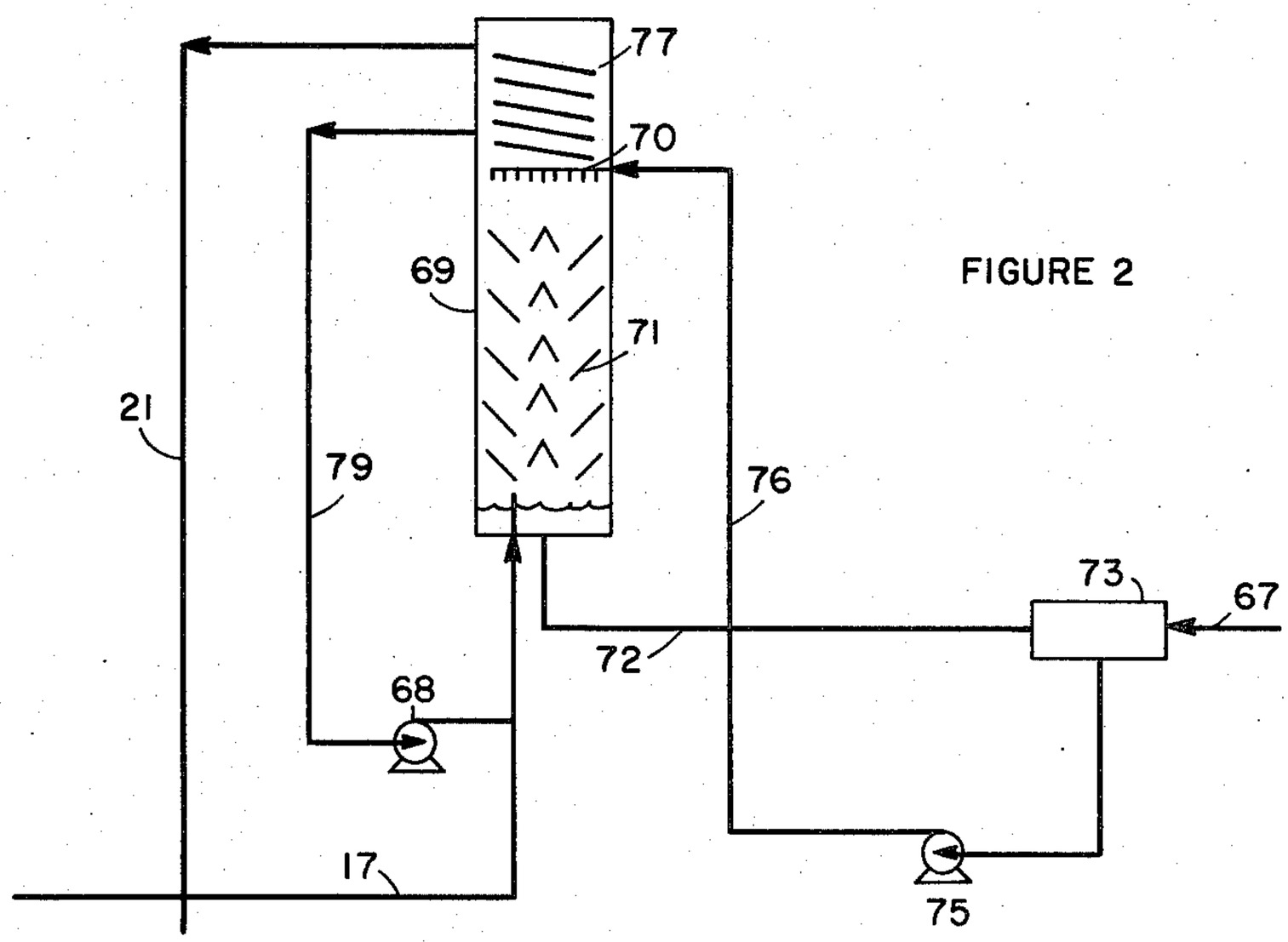

FIGURE 2

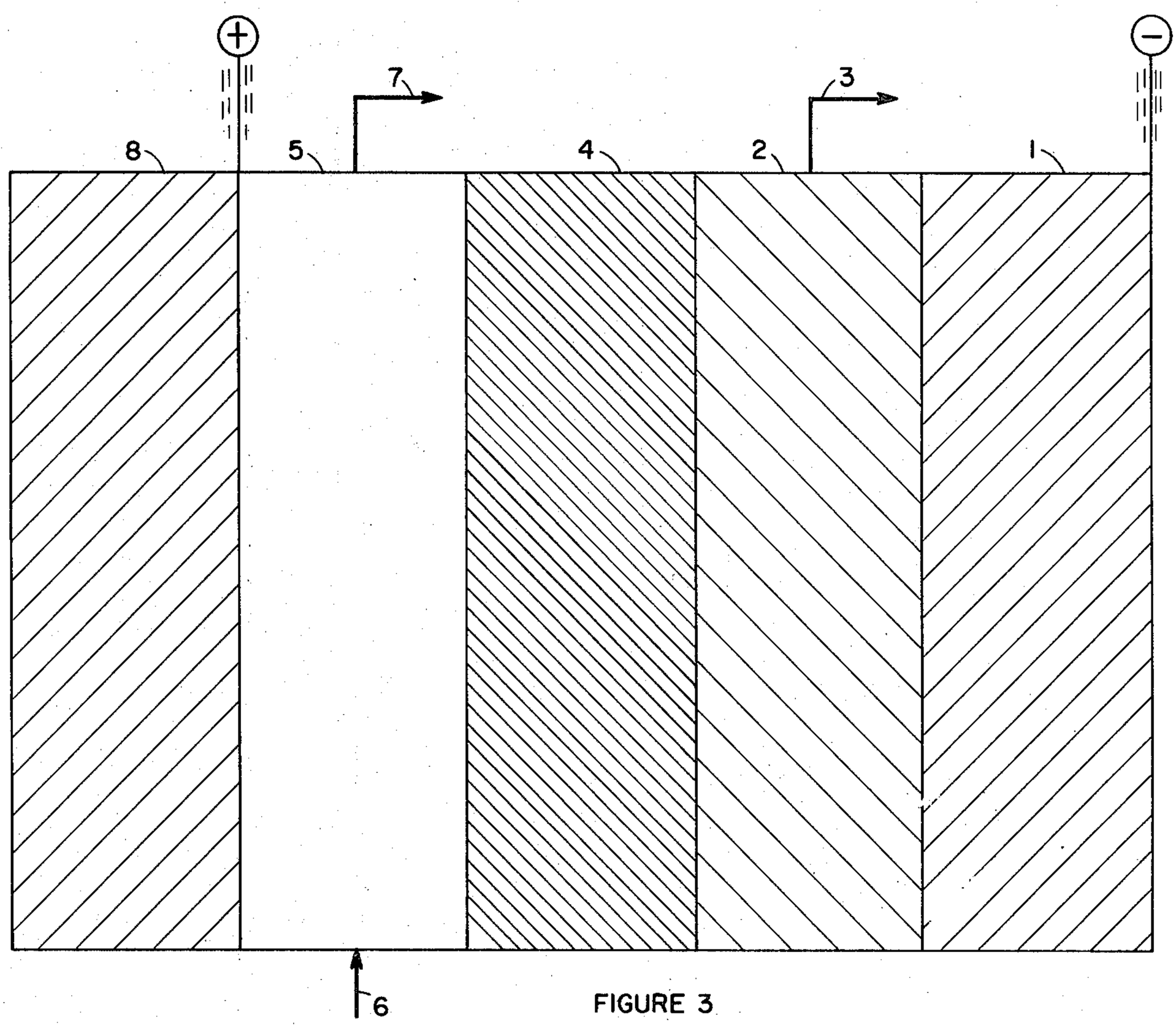

FIGURE 3

United States Patent Office

3,791,966

Patented Feb. 12, 1974

3,791,966

ALKALI METAL DESULFURIZATION PROCESS FOR PETROLEUM OIL STOCKS

Roby Bearden, Jr., Baton Rouge, La., assignor to Esso Research and Engineering Company

Filed May 24, 1972, Ser. No. 256,438
Int. Cl. C10g *17/00, 19/00*
U.S. Cl. 208—208 M 15 Claims

ABSTRACT OF THE DISCLOSURE

Low sulfur-content petroleum oil stocks are prepared by contacting a sulfur-containing oil stock with an alkali metal, preferably sodium, or an alkali metal alloy, preferably sodium/lead, to produce a mixture comprising a low sulfur content oil containing alkali metal salt dispersed therein. The mixture of salts in oil is resolved by contacting the same, in one embodiment of the invention, with 10–80 mole percent H_2O based on total moles of salt in the oil, at a temperature of at least about 610° F., whereupon a salt phase separates from the oil. In a second embodiment of the invention, the contacting is conducted with about 110–200 mole percent H_2O, at a temperature ranging between about 500–750° F. In a latter embodiment, the water-treated mixture is subsequently cooled to below about 250° F. Thus separated the salt is blended with a molten sulfur-rich alkali metal polysulfide and H_2S thereby forming a sulfur-depleted alkali metal polysulfide which is then decomposed electrolytically to form alkali metal and a sulfur-rich polysulfide, which is subsequently reduced in sulfur content.

BACKGROUND OF THE INVENTION

Field of the invention

The present invention relates to a process for the desulfurization of sulfur-containing petroleum oil stock. More particularly, the process comprises contacting a sulfur-containing oil stock with an alkali metal or alkali metal alloy.

Description of the prior art

In the last several years there has been an ever-increasing concern about air pollution. Some of the objects of this concern have been the discharge of sulfur oxides to the atmosphere upon burning sulfur-containing fuels. Over a period of many years several studies have been conducted with the object of developing efficient and economical means for reducing the sulfur content of crude petroleum oils and other virgin hydrocarbon fractions.

To the present, the most practical desulfurization process has been hydrogenation of sulfur-containing oils at elevated pressures and temperatures in the presence of an appropriate catalyst. The process requires the use of hydrogen pressures ranging from about 700 to about 2500 p.s.i.g. and temperatures ranging from about 650 to about 800° F., depending on the nature of the oil to be desulfurized and the amount of sulfur required to be removed.

The process is efficient in the case of distillate oil feedstocks but less efficient when used with those containing undistilled oil such as whole crudes or residua. This is due to several factors. First, most of the sulfur in the oils is contained in high molecular weight molecules, and it is difficult for them to diffuse through the catalyst pores to the catalyst surface. Furthermore, once at the surface, it is difficult for the sulfur atoms contained in the molecules to "see" the catalyst surface. Additionally, the feedstocks may contain large amounts of asphaltenes which tend to form coke deposits under the process conditions on the catalyst surface thereby deactivating the catalyst. Moreover, high boiling organometallic compounds present in such oil stocks decompose and deposit metals on the catalyst surface thereby diminishing the catalyst lifetime. The severe operating conditions employed in the process cause appreciable cracking of high boiling oils thereby producing olefinic fragments which, themselves, consume hydrogen, thereby lowering the process efficiency and increasing costs.

Alternate desulfurization processes that have been empolyed in the past used alkali metal dispersions, such as sodium, as desulfurization agents. Basically, the process involves contacting a hydrocarbon fraction with the sodium dispersion, the sodium reacting with the sulfur to form dispersed sodium sulfide (Na_2S). However, such a process was not proven to be economically advantageous, particularly for treatment of high boiling, high sulfur content feedstocks due to (a) the high cost of sodium, (b) problems related to removal of sodium sulfide formed in the process from the oil and (c) the impracticability heretofore of regenerating sodium from the sodium sulfide.

In theory, it has been determined that the best approach to this problem of sodium regeneration would be to lectrolyze an alkali metal salt that melts at about the same temperature as used for the desulfurization process and which can be electrolyzed with minimum consumption of electrical energy. Th alkali polysulfides, preferably the sodium polysulfide, meet this requirement. There are three sodium polysulfides with melting points as follows: Na_2S_2 (885° F.), Na_2S_4 (545° F.) and Na_2S_5 (485° F.). These polysulfides are mutually soluble and intermediate compositions, having intermediate properties, can form. The eutectic is at about $Na_2S_{3.1}$ with a melting point of about 450° F. Moreover, the electrolysis of molten sodium polysulfide consumes less electrical energy than electrolyzing molten sodium chloride, the traditional electrolysis salt.

The cost of sodium as a reagent used on a once-through basis is prohibitively high, and it is therefore clear that one must be able to recover the sodium from the sodium sulfide in order to provide an economically viable process. Much thought has been given to this problem in the past, but until now no economical process has been developed. One of the major difficulties has been the separation of the sodium sulfide from the oil.

SUMMARY OF THE INVENTION

In accordance with this invention, it has now been discovered that an economically feasible desulfurization process vis-a-vis hydrodesulfurization of whole crude or residual oils can be achieved and that outstanding sulfur removal can be realized. Specifically, the process involves contacting a sulfur-containing petroleum oil stock with a desulfurization agent comprising an alkali metal, such as lithium, sodium, potassium, and the like, preferably sodium, or an alkali metal alloy, preferably sodium/lead, at desulfurization conditions, thereby forming a mixture comprising an oil of diminished sulfur content containing alkali metal salts (generally in the form of a dispersion of submicron salts in the oil), and contacting at least a portion of the mixture with water thereby substantially separating the salts from the oil.

At least a portion of the water-treated alkali metal salts can then be contacted with a sulfur-rich alkali metal polysulfide and H_2S, thereby converting a substantial portion of the salts to a sulphur-depleted polysulfide. The latter is used as an electrolyte in an electrolytic cell for the production of elemental alkali metal.

The alkali metal salts comprise, in addition, to alkali metal sulfide, by-product salts such as organometal salts, metal mercaptides, metal oxides and the like. Hereinafter the invention will be described with respect to sodium although it is understood that other alkali metals as here-

inbefore disclosed may be used. The water is added to the oil-salt mixture, in one embodiment of the invention (hereinafter referred to as Scheme A), in amounts ranging between about 10 and 80 mole percent, based on total number of moles of salt present in the mixture. In a second embodiment of the invention (hereinafter referred to as Scheme B) about 110–200 mole percent H_2O is added to the mixture. The net consequence of the water treatment step is (1) to convert at least a portion of the sodium salts (other than sodium sulfide and sodium mercaptides which are essentially non-reactive with water under the reaction conditions) to NaOH and (2) to agglomerate submicron salts to yield a macrocrystalline salt phase (preferably having a particle size between about 150 and 200 microns) which readily disengages from the oil phase.

The amount of water added to the oil-salt mixture determines, in part, the size of the salt particles which separate from the oil. Thus, for example, a larger particle agglomerate size (comprising in part a hydrate of Na_2S) is formed using Scheme B, vis-a-vis Scheme A wherein a minimum amount of water is used to disengage the salts from the oil. Contacting conditions in Scheme A comprise (1) a temperature of at least about 610° F. and ranging between about 610 and 800° F., preferably between about 650 and 750° F. and most preferably at the temperature of the desulfurization step, and (2) a pressure ranging between about atmospheric pressure and 100 p.s.i.g.

With regard to Scheme B, temperatures during the water addition step are maintained within the temperature range of about 500° and 650° F. Typical pressures employed vary between about 100 and 500 p.s.i.g., preferably between about 100 and 200 p.s.i.g. The latter pressures reflect the partial pressure of the excess water vapor present in the contacting zone. It is important to note that at the elevated temperatures used in Scheme B, the larger size agglomerated salt particles do not form. The mixture must first be cooled to a temperature below about 250° F. in order to agglomerate the salts.

In general the salt composition after water treatment comprises a major amount of NaOH and Na_2S and a minor amount of other components such as sodium mercaptides, which as mentioned supra, are unreactive with the NaOH under the reaction conditions. Separation of the salt phase from the oil phase can take place using any one of several well known commercial techniques such as filtration or centrifugation. In the case of Scheme A, the separation can be conducted within a broad temperature range and preferably, at the temperature of the desulfurization reaction itself, e.g., about 650° F. However, in Scheme B, the separation is conducted at a lower temperature and preferably below about 250° F. for the reasons discussed above. In the latter instance, the cost disadvantages related to cooling the salt phase to a temperature below 250° F. will have to be balanced with the ease of separation of the salt-oil mixture related to increased particle size of the salt agglomerate (vis-a-vis Scheme A) in determining the amount of water to use in a particular operation.

After separation of the salts from the oil, e.g., by filtration, the salts are contacted with a sulfur-rich sodium polysulfide, desirably in the molten state and preferably represented by the formula Na_2S_x (where x varies from about 4.0 to 4.9, preferably from about 4.4 to 4.8, most preferably from about 4.5 to 4.7) and H_2S. The contacting results in the formation of a sulfur-depleted sodium polysulfide, i.e., Na_2S_y (where y ranges from about 2.8 to 4.5, preferably from about 3.5 to 4.3, most preferably from about 4.0 to 4.2, e.g., 4.0), desirably at a temperature above the melting point of the resulting polysulfide.

The reaction of Na_2S_x with the major components of

the salt mixture, i.e., NaOH and Na_2S, is thought to proceed by the following generalized equations:

$$Na_2S + nNa_2S_x \rightarrow (n+1)Na_2S_y \quad (1)$$

$$6NaOH + nNa_2S_x \rightarrow (n+2)Na_2S_y + Na_2SO_3 + 3H_2O \quad (2)$$

The value of n (moles of polysulfide) in the above equation will depend on the values chosen for x and y. The amount of Na_2S_x that is required to react with the H_2O-treated salt mixture varies, being dependent in part on the amounts of Na_2S and NaOH present in the salts and on the compositions of both the sulfur-rich polysulfide and the sulfur-depleted polysulfide. Using the above equation, the amount of Na_2S_x required to react with a salt mixture comprising, for example, 1 mole of Na_2S and 1 mole of NaOH is:

$$\text{Moles } Na_2S_x \text{ to react with 1 mole of } Na_2S = \frac{\text{atoms } S_{Na_2S_y} - 1}{\text{atoms } S_{Na_2S_y} - \text{atoms } S_{Na_2S_y}} \quad (3)$$

$$\text{Moles } Na_2S_x \text{ to react with 1 mole of NaOH} = \left(\frac{1 + 2 \text{ atoms } S_{Na_2S_y}}{\text{atoms } S_{Na_2S_x} - \text{atoms } S_{Na_2S_y}}\right)^{1/6} \quad (4)$$

where: atoms $S_{Na_2S_y}$ = the number of sulfur atoms in Na_2S_y

atoms $S_{Na_2S_x}$ = the number of sulfur atoms in Na_2S_x

Knowing the number of moles of Na_2S and NaOH present in the salt mixture and the values for x and y, the required amount of Na_2S_x can be determined. It is noted that the calculated amounts of Na_2S_x are minimum values, and that larger quantities may be required depending on the amount of other salts that may be present in the salt mixture, which salts also react with the Na_2S_x.

The Na_2SO_3 that forms, as shown in Equation 2, is converted to polysulfide by contact with H_2S. In addition, sodium mercaptides and any residual oxygen-bearing salts such as NaOH and the like present in the sodium mixture are converted to polysulfide by the H_2S treatment. In general about 0.5–1.0 moles of H_2S per mole NaOH in the salt mixture is sufficient to effect the desired conversion, although larger amounts may be used if desired. The H_2S treatment may take place before, during or after the polysulfide contacting step.

Any feedstock from which sulfur is desired to be removed may in theory be used in the instant process. Thus, for example, suitable feedstocks include whole crude such as Safaniya crude (Middle East), Lagunillas crude (Venezuelan), or U.S. crudes, residual fractions or any distillate fraction. The subject process is particularly adapted to the desulfurization of whole crude or residua that are difficult to treat by other methods such as hydrodesulfurization.

While the feedstock may be fed directly to the initial contacting zone for desulfurization without pretreatment, it is desirable to desalt the feed in order to prevent NaCl contamination of the molten polysulfide feed to the electrolysis cell. Desalting is a well-established process in the industry. A particularly preferred desalting process involves the addition of a small amount of water to the oil in order to dissolve the salt contained therein, followed by electrical coalescers. The oil is then dehydrated by conventional means known in the industry.

The sodium may be used as a dispersion of the pure metal or in the form of a molten alloy such as sodium/lead or sodium/tin. When sodium/lead is the alloy, desirable proportions comprise about 0.3 to about 0.5 g.-atom sodium/0.7 to about 0.5 g.-atom lead, and when

using sodium/tin, about 0.2 to 0.3 g.-atom sodium/0.8 to 0.7 g.-atom tin.

The contacting of the sodium metal or sodium metal alloy with the sulfur-containing oil is preferably carried out at temperatures and pressures sufficient to maintain the bulk of the reactants within the reaction zone in the liquid phase. However, conditions may be varied to provide vapor phase contact. The reaction temperature will generally be maintained between about 450 and 750° F., preferably 600 to 700° F., e.g., 650° F. The reaction pressure will depend on the feed and temperature employed. For reduced crude fractions the pressure will range between about 10 and 100 p.s.i.g., preferably 40 to 60 p.s.i.g. For whole or topped crude, pressures may be raised to as high as about 500 to 600 p.s.i.g. in order to maintain all or most of the oil in the liquid phase.

The sodium metal reacts with the sulfur-containing oil stock as shown in Equation 5 below to yield sodium sulfide which generally forms as a microcrystalline dispersion in the oil.

$$2Na + S\text{-oil} \rightarrow Na_2S + \text{oil} \qquad (5)$$

In addition, organo-oxygen contained in the feedstock is removed therefrom by reacting with the sodium metal. Furthermore, depending on the amount of water present in the feed and the reaction conditions, varying amounts of thiosulfate, hydroxide and salts of organic acids may be formed. (Typical crudes contain between about 0.1 and 0.2% organic oxygen.) Additionally, some organo-nitrogen and organo-metals are also removed form the oil by reaction with the sodium.

The desulfurization step is conducted as a batch or continuous type operation but is preferably continuous. In general, the various means customarily employed in extraction processes to increase the contact area between the oil stock and the sodium metal or alloy thereof can be employed. The apparatus used in the desulfurization step is of a conventional nature and can comprise a single reactor or multiple reactors equipped with (a) shed rows or other stationary devices to encourage contacting; (b) orifice mixers; (c) efficient stirring devices such as mechanical agitators, jets of restricted internal diameter, turbomixers and the like, or (d) a packed bed.

The petroleum oil stock and the sodium metal or sodium metal alloy can be passed through one or more reactors in concurrent, crosscurrent, or countercurrent flow, etc. It is preferable that oxygen and water be excluded from the reaction zones; therefore, the reaction system is thoroughly purged with dry nitrogen and the feedstock dried prior to introduction into the reactor. It is understood that trace amounts of water, i.e. less than about 0.5 weight percent, preferably less than about 0.1 weight percent based on total feed, can be present in the reactor. Where there are larger amounts of water, process efficiency will be lowered somewhat as a consequence of sodium reacting with the water.

The resulting oil dispersion is subsequently removed from the desulfurization zone and contacted with H_2O as described supra. Small amounts of sodium compounds may still be present in the oil after salt separation and may be removed by contacting the oil with an acid such as H_2S, acetic acid, dilute sulfuric acid and the like. Treatment of the H_2O-treated salt mixture with Na_2S_x and H_2S results in the formation of a sulfur-depleted sodium polysulfide, i.e., Na_2S_y.

After further treatment of the Na_2S_y to remove various impurities present therein, the Na_2S_y is cycled to electrolytic cells wherein it is dissociated to form molten sodium and a sulfur-rich sodium polysulfide, i.e., Na_2S_z wherein z ranges from about 4.5 to 5.0, preferably from about 4.6 to 4.9, most preferably from about 4.7 to 4.9. The sodium thereby formed is then withdrawn and either alloyed with a molten metal such as lead or tin or introduced directly into the desulfurization zone in undiluted form as hereinabove described.

The electrolytic cell unit will preferably comprise a sodium ion-conducting physical and electronic barrier or membrane that separates alkali metal on the one side from alkali metal polysulfide on the other side. Generally, the membrane may be composed of any material that can function as a sodium ion-conducting separator; however, beta-alumina containing sodium oxide is preferred. Such beta-alumina will contain sodium oxide in the general range of about $Na_2O.11Al_2O_3$—$Na_2O.5Al_2O_3$. It is noted that when an alkali metal other than sodium is employed in the instant process, the oxide of the alkali metal will be admixed with the beta-alumina in lieu of Na_2O.

The beta-alumina may be used in the pure form or doped with a small amount of metal oxide such as MgO, Li_2O and the like. A detailed discussion of doped beta-alumina is provided in an article appearing in the Electrochemical Society Extended Abstracts—Los Angeles Meeting—May 10–15, 1970, entitled "Ionic Conduction in Impurity Doped β-Alumina," by Atsuo Imai et al., the disclosure of which is incorporated herein by reference. Reference is also made to U.S. Pats. 3,488,271 to J. T. Kummer et al. and 3,475,225 to G. T. Tennenhouse. During cell operation, sodium ions migrate from the sodium polysulfide side, i.e., the anode side, through the barrier to the sodium metal side, i.e., the cathode side, where they are neutralized by electrons. At the same time polysulfide ions give up their electrons at the electron-conducting anode to form elemental sulfur that then reacts with additional polysulfide anions to form new polysulfide ions, i.e., $S_z^=$, of greater sulfur content.

As indicated above, z will take values in the range of about 4.5 to 5.0. The $S_z^=$ anions are continually removed from the cell in combined form with sodium, i.e., Na_2S_z. The anode may comprise any suitable electron conducting-current collector such as graphite, molybdenum, titanium, chromium, stainless steel, or aluminum that can withstand corrosive attack of the sodium polysulfide. The cells are arranged preferably in series electrically, so that the anode for one cell is the cathode for the one adjacent to it. The overall reaction is shown below:

$$\begin{array}{ll} 2Na^+ + 2e^- \rightarrow 2Na^\circ & \text{cathode side} \\ \left.\begin{array}{c} S_y^= \rightarrow yS_o + 2e^- \\ \left(\frac{z}{y} - 1\right)S_y^= + yS_o \rightarrow S_z^= \\ \hline \text{net anode reaction: } \left(\frac{z}{y}\right)S_y^= \rightarrow S_z + 2e^- \end{array}\right\} & \text{anode side} \end{array} \qquad (6)$$

The recovered Na_2S_z can be reduced in sulfur content to Na_2S_x (the latter bieng contacted with the H_2O-treated salt mixture as described supra) by application of a vacuum and/or heat thereby liberating sulfur corresponding to that which was removed from the oil. Alternatively, at least a portion of the Na_2S_z may be contacted directly with the H_2O-treated salt mixture.

In other embodiments, elemental sulfur is allowed to build up in the cell and the operating temperature therein is maintained high enough so that the sulfur is continuously removed therefrom as vapor. In another embodiment, liquid sulfur forms in the cell and is separated from the polysulfide outside the cell. In yet another embodiment, the sodium/lead alloy may be formed internally, i.e., in situ, before the molten sodium metal is withdrawn from the electrolytic cell by continuously feeding lead or spent sodium/lead alloy to the cathode side of the cell.

While a beta-alumina type cell has been described, any other cell that is capable of economically decomposing sodium polysulfide into molten sodium is sufficient for the present purposes. A particular beta-alumina electrolytic cell and methods for the preparation of beta-alumina are described in such patents as U.S. 3,488,271 and 3,404,036 to J. T. Kummer et al., U.S. 3,468,709

to J. T. Kummer and U.S. 3,446,677 and U.S. 3,475,225 to G. T. Tennenhouse, the disclosures of which are incorporated herein by reference.

BRIEF DESCRIPTION OF THE DRAWINGS

FIG. 1 is a flow diagram of the overall desulfurization process using sodium metal in pure form.

FIG. 2 shows the reactor system for desulfurization with an alloy of sodium, i.e., sodium/lead.

FIG. 3 is a simplified scheme showing the formation of the molten sodium within the electrolytic cell.

Referring to the drawings in detail, the desulfurization reactor systems used in the instant process vary depending on whether sodium or sodium alloy is used as the reactant. The system using sodium will be described first, then the system using sodium alloy.

Turning now to FIG. 1, a sulfur-containing feedstock, preheated to 450–500° F., is fed by means of line **1** and pump **2** to separator vessel **3** where trace amounts of water and light hydrocarbon fractions are removed through line **4**. The feed is then discharged through line **5** by pump **6** to filter vessel **7** wherein particulate matter, i.e., coke, scale, etc. is removed.

The feed is preliminarily desalted by conventional means (not shown). Feed exiting the filter via line **8** is split into two streams. A small portion is fed through line **9** and heat exchanger **14** to dispersator vessel **11** where a dispersion is formed with sodium entering through line **67**. The dispersator vessel is of a conventional design and is operated at 250–300° F. at atmospheric pressure. The vessel is blanketed with nitrogen. The resultant dispersion, drawn through line **12**, blends with the balance of the feed in line **10** and enters the charging pump **13**, where the pressure is raised to about 500 p.s.i.g., for whole crudes and distillates and about 50 p.s.i.g. for residual fuels. The feedstock will ordinarily be a whole crude of about 1 to about 3 weight percent sulfur based on total feed or a residual stock of about 2 to about 7 weight percent sulfur based on total feed, although distillate stocks can be used.

The oil enters heat exchanger **16** via line **15** where the temperature is raised to about 500 to 550° F. and is then fed through line **17** to reactor vessel **18**. The reactor contains baffles **19** to promote continuing contact between sodium and the oil and to prevent bypassing from the inlet to the outlet. Holding time in the reactor is about 15 to 60 minutes and is preferably 30 minutes. The temperature at the top of reactor **18** is about 680° F. Gas that is formed due to the increase in temperature is taken overhead through line **20** and is condensed and depressurized by conventional means (not shown). The desulfurized oil containing dispersed sodium sulfide and other salts leaves the top of reactor **18** via line **21**.

The remainder of FIG. 1 will be explained below after describing the alternate reactor system for sodium alloy shown in FIG. 2.

FIG. 2 shows the reactor system for the case where sodium alloy is used. It differs from the case where sodium alone is used primarily in that oil is recycled to the reactor in order to prevent cooling of the alloy below its melting point and in order to recover and recycle the spent alloy. The feedstock which has been preliminarily preheated, dehydrated and desalted as per FIG. 1 is premixed in line **17** with desulfurized recycled oil from pump **68**. The mixed oil stream enters reactor vessel **69** via line **17** and flows in an upward direction therethrough. The vessel is of such a size that the oil remains in the reaction portion below the sodium alloy disperser **70** for about 10 minutes to about 1 hour. The sodium alloy, preferably sodium/lead or sodium/tin or a mixture of the two, enters reactor **69** via disperser **70**. Atom compositions of about 0.3 to 0.5 Na/0.7 to 0.5 Pb or 0.2 to 0.3 Na/0.8 to 0.7 Sn are suitable.

The alloy droplets commingle with the rising oil stream, and being heavier than the oil and of large enough size, fall downwardly through the rising oil stream. Baffles **71** promote contact. The spent alloy collects in the bottom of reactor **69** and passes via line **72** to the alloy storage vessel **73**. The alloy is fortified by contact with freshly regenerated sodium entering vessel **73** via line **67**. Pump **75** feeds the fortified alloy via line **76** to disperser **70**.

The dispersed oil passes into a settler zone located in the top of reactor **69** where any small, entrained alloy particles are allowed to settle. Baffles **77** act as collecting plates for the alloy particles and are placed at a slight angle so that the coalesced alloy can run off the ends. The desulfurized oil/sodium sulfide dispersion leaves reactor **69** via line **21**.

One particular reactor system has been described. However, the alloy and oil can flow cocurrently, and any one of several well-known types of mixers such as pump mixers, high shear mixers or paddle blade mixers and the like can be employed. Other settling means, in particular external, long, horizontal flow vessels or liquid cyclones and the like can be also used.

It is noted that low pressure hydrogen, e.g., less than about 500 p.s.i.g., for example 200 p.s.i.g., may be admitted to the desulfurization zone during the sodium-contacting step in order to suppress organometallic salt formation.

The oil-salt dispersion enters contactor vessel **22** via line **21** and is treated, in one embodiment of the invention, with 30–80 mole percent water (based on total moles of salt contained in the oil). Water enters through line **23**. The contact vessel operates at 610–800° F., preferably 650–700° F., most preferably at the desulfurization temperature, and at a pressure of about 15 to 100 p.s.i.g. Residence time in the vessel is on the order of 10 minutes, although longer or shorter times may be used if desired. The resulting mixture is fed via line **24** to heat exchanger **25** where the temperature is dropped to about 400–450° F. and then via line **26** to the hydroclone vessels **27** and **28**, which are operated in series.

Desulfurized oil is withdrawn via line **29** to heat exchanger **30** and exits at 250–300° F. through line **21**. An acid such as dilute sulfuric acid or acetic acid, may be injected into line **31** through line **32** to react with oil soluble salts, e.g. sodium mercaptides and the like, and the resultant mixture enters the electrostatic precipitator **34** via line **33**. The acidic aqueous phase from vessel **34** is withdrawn through line **36** and discarded. Desulfurized oil is fed through line **35** to steam stripper **37** and subsequently to storage via line **35**.

In another embodiment of the invention, 110–200 mole percent water (based on total moles of salt contained in the oil) is added to the oil-salt dispersion in contactor vessel **22**. The temperature is maintained within the vessel, at about 500–650° F. and at a pressure of about 100 to about 500 p.s.i.g. Withdrawal of the resultant mixture followed by cooling of same (such as by heat-exchange) to a temperature below about 250° F., results in the formation of large sized particles of salt, presumably the hydrated Na_2S. In fact the particles are so large and the settling rate so rapid that hydroclone action may not be necessary.

Salt slurries drawn from the hydroclones through lines **39** and **40** are washed free of adhering oil in vessel **41** with a light hydrocarbon which enters through line **42**. The resultant washed salts enter drier **45** through line **44** where light hydrocarbon and traces of water are removed at about 550–700° F. The dried salts enter the blending vessel **48** where contact is made with molten sodium polysulfide entering through line **49**. The resultant melt is further reacted with hydrogen sulfide entering from line **51**. Hydrogen sulfide, it is thought, converts oxygen-bearing salts, e.g., NaOH, Na_2O_3, to the desired polysulfide and liberates the oxygen in the form of water. Excess hydrogen sulfide, light hydrocarbons and water exit the blending vessel via line **50**. Eventually the com-

ponents of the stream are resolved (method not shown) and the hydrogen sulfide is recycled to vessel **48**.

The molten sulfur-depleted polysulfide (Na_2S_y as hereinabove defined) formed by the reaction of H_2O-treated salts with sulfur-rich polysulfide is removed from blending vessel **48** through line **52** and fed to filter vessel **53** to remove particulate matter such as coke and melt insoluble salts. Line **54** is used to purge a small stream of sodium polysulfide from the system in order to prevent buildup of impurities to an inoperable level.

These dissolved impurities arise from the feed and from equipment corrosion as well as from the organometallic compositions removed from the feed by the action of sodium. Specifically, compounds containing combined iron, vanadium, silica, nickel, chromium, lead and tin may form and are removed from the system via line **54**. Treated Na_2S_y is then introduced into electrolytic cell **56** via line **55**.

A dry nitrogen stream (not shown) blankets the electrolytic cells. The electrolytic cells are of a conventional design and may comprise any cell capable of converting the polysulfide to sodium metal. Preferably, the individual cell unit comprises a molten sodium-containing cavity and a molten sodium polysulfide-containing cavity separated from each other by sodium ion-permeable membrane comprising preferably crystalline beta-alumina as already described.

A schematic representation of a cell unit is shown in FIG. 3. In operation, electrons flow through the metal separator sheet **1** entering the molten sodium-containing cavity **2**, wherein sodium cations combine with the electrons and are reduced to elemental sodium that is withdrawn from the cavity via line **3**. The beta-alumina membrane **4** acts both as a physical separator and alkali ion conductor between the two cavities. Sodium polysulfide is introduced into cavity **5** via line **6**; it is, by its nature, highly ionized into sodium cations and polysulfide anions. The latter are oxidized to elemental sulfur that reacts further to yield sulfur-enriched polysulfide anions. The anions along with the requisite sodium cations are subsequently removed via line **7** from cavity **5** as sulfur-enriched sodium polysulfide (Na_2S_z where z varies from about 4.5 to 5.0). Electrons which are given up by the polysulfide anions flow through the metal separating sheet **8** to form a complete circuit. Thus the anode for one cell becomes the cathode for the next. The cell anode will comprise a porous or nonporous electron-conducting current collector such as graphite, molybdenum, titanium, chromium, aluminum, nickel-iron alloys and other alloys and the like.

As noted above, although beta-alumina is shown as the preferred separator, any other separator that is sufficient for the purposes may be employed. Additionally, an alternate embodiment comprises forming and continually removing elemental sulfur from the cell. In practice, the electrolytic cell **56** comprises a plurality of individual cell units in order to provide a sufficient output of sodium.

A plurality of cells e.g. 100–200 cells are operated in series in order to build up the overall voltage to about 280–700 volts. The total amount of cell area required depends on the amount of sodium required, and is in the range of 20 to 70 square feet per pound per minute of sodium. The temperature in the cell rises to about 700–820° F., depending on the amount of cell area, current density used, the resistance of the cell elements and their condition.

The composition of the sodium polysulfide leaving the electrolytic cell can be controlled by the flow rate and the current. The greater the flow rate the less is the increase in sulfur content; the greater the current the greater is the increase in sulfur content. The composition is controlled such that by applying a reasonable vacuum (and/or heat if desired), sulfur corresponding to that which was removed from the oil can be taken overhead.

Accordingly, the sodium polysulfide formed in the electrolytic cell is passed via line **57** to surge vessel **58** and then to sulfur-reducing vessel **60** which is partially evacuated, e.g., to an absolute pressure of about 10 to about 300 mm. Hg, preferably about 50 to 100 mm. Hg, to vaporize some of the sulfur and reduce the sulfur content of the polysulfide so that the final polysulfide composition is Na_2S_x wherein x takes values ranging from about 4.0 to about 4.9, preferably about 4.4 to about 4.8. At one-tenth atmosphere sulfur vapor pressure, for example, the composition in equilibrium therewith is approximately $Na_2S_{4.82}$ at 700° F., $Na_2S_{4.73}$ at 750° F. and $Na_2S_{4.64}$ at 800° F. The sulfur vapor is taken overhead through line **61** and condensed by conventional means (not shown). As indicated supra, the resulting polysulfide is then recycled via line **49** to scrubbing tower **48**. Alternatively, at least a portion of the sodium polysulfide stream exiting from the cell can be contacted directly with the H_2O-treated salt mixture, thereby by-passing the evacuation operation in vessel **60**. Thus, for example, Na_2S_5 exiting from the cell can be contacted directly with the H_2O-treated salt mixture. The molten sodium is subsequently removed from the electrolytic cell and passed via line **62** to surge vessel **63** where it is blended with makeup sodium entering at line **64** and then fed via line **65**, pump **66** and line **67** to vessel **11**.

DESCRIPTION OF THE PREFERRED EMBODIMENTS

The present invention will be more clearly understood by reference to the following examples:

DESCRIPTION OF APPARATUS AND PROCEDURES

(A) Sodium treatment reaction

The reactor consisted of a standard, one liter Paar autoclave, which was constructed of Monel steel. Two modifications were made, however. An oversized turbine blade stirrer head was substituted for the standard item to aid in lifting and dispersing sodium and its alloys, particularly the alloy with lead. Also, the dipleg was fitted with a 50 micron metallic filter element to aid in sampling the oil phase when mixtures of salts and oil were present. The reactor head contained the usual openings and fittings for measurement of pressure and temperature and for the addition of gases.

In the typical run the reactor was charged at room temperature with the desired quantity of sulfur-containing oil and freshly cut sodium. Alternatively, in some runs, sodium was added as an alloy with lead. The reactor was sealed and thoroughly flushed with nitrogen. About 50 p.s.i.g. of the flush gas was present when heatup was begun. The reactor temperature was brought to approximately 450° F. prior to beginning stirred contact, thereby minimizing the reaction time below the normal run temperature range of 600–700° F.

The yield of gaseous products, comprising materials lighter than or the same weight as pentane was determined by cooling the reactor to room temperature, venting the gases through a wet test flow meter to determine volume, and then submitting a representative sample for component analysis by mass spectrometry.

Coke formed in the desulfurization reaction was most often recovered with the sodium salts and is reported as the water insoluble fraction of the salt.

Without exception, the combined coke and C_5^- gas yield never amounted to more than 1.0 wt. percent of the feed and usually was less than 0.5 wt. percent on feed. Therefore, coke and gas yields are not reported in the examples which follow. Also, desulfurized oil recoveries were essentially quantitative in all examples.

(B) For water treatment preparatory to salt recovery

Water was added directly to the mixture contained in the sodium treating reactor. Normally, the addition was

made immediately at the end of the sodium-treating step and at the same temperature employed in that step. A weighed amount of reagent was loaded into a 200 ml. stainless steel bomb which was then fitted to a reactor inlet valve. Nitrogen pressure was used to force the bomb contents (i.e., H_2O) into the reactor. The bomb, previously tared, was always reweighed after addition to determine the amount of reagent retained.

(C) Separation of the oil and salt phases

Again, the sodium-treating reactor was used. After injection of water, stirring was ceased for a time sufficient to allow the salt phase, either macrocrystalline solids or molten salts, to settle (the salts exhibit a density roughly twice that of oil). If desired, oil samples could then be withdrawn through the filter-modified dipleg while still at the approximate temperature of the sodium treating reaction. Ultimately, however, the reactor was cooled to about 200° F., opened and the bulk of the oil phase decanted. Precipitated salts were slurry-washed with toluene to remove adhering oil and then dried.

Salt recovery via blending with molten sodium polysulfide (Na_2S_x) required cooling the reactor to 200° F., adding the polysulfide as a powder and heating again to the melting point of the polysulfide end product. The molten salt recovery procedure was then used.

(D) Conversion of salts to sodium tetrasulfide (Na_2S_y)

Most of the hydrated salts were decomposed by heating at 400° F. under 30 mm. vacuum. Thus dried, the salts were blended with the requisite amount of sodium pentasulfide and the mixture then heated to 600° F. under nitrogen. The resultant slurry-melt was bubbled with dry H_2S to convert oxygen-bearing compounds to sodium polysulfide. Water formed in this reaction was swept from the reactor with nitrogen. As the H_2S reaction neared completion the melt became homogeneous. The H_2S treatment was carried out for 30 minutes and the melt was held an additional 30 minutes at 600° F. under nitrogen prior to cooling.

(E) Electrolysis of sodium tetrasulfide (Na_2S_y) (sodium regeneration-proposed technique)

The laboratory electrolytic cell consists of a beta-alumina tube sealed into a Pyrex glass reservoir for sodium metal and surrounded by graphite felt packing. The outer shell of stainless steel serves as the anode current collector. The cell has a bottom inlet line and a top outlet line. Molten sodium acts as the cathode current contact. Molten sodium tetrasulfide is fed through the bottom inlet line and sodium pentasulfide product is withdrawn through the top outlet line just below the sodium reservoir. Since molten sodium acts as the cathode surface, it is necessary to load sodium in the beta-alumina tube prior to startup.

(F) Pyrolysis of sodium pentasulfide (Na_2S_z) (sulfur recovery)

The apparatus for this step consists of a round bottom Pyrex flask fitted with a nitrogen inlet tube, temperature indicator probe and an outlet line connected to a chilled receiver and vacuum pump.

In a proposed run, sodium pentasulfide is charged to the flask and brought to the desired temperature and pressure. A slow nitrogen bleed into the melt is used to regulate the vacuum and to provide stirring. Sulfur vapor swept from the flask is collected in the chilled receiver. The pyrolysis rate and depth of pyrolysis, i.e., approach to Na_2S_4, can be increased by raising the temperature and/or lowering the pressure.

(G) Salt analyses

The total analysis of sodium sulfide mixtures was based on the procedure outlined in Scott's Standard Methods of Chemical Analysis, Fifth Edition (1939), volume 2, pp. 2181–2187. The procedure does not differentiate between the various polysulfides; therefore, polysulfide sample were always analyzed for total sodium and total sulfur content to establish the probable molecular formula.

(H) Oil product analyses

Sodium-treated oil products were analyzed not only for sulfur content, but also for changes in metals content and general physical properties such as API gravity, viscosity and asphaltene content. The oil product obtained from each recovery scheme was filtered hot through a number 2 grade Whatman paper prior to analysis. Also a sample of the filtered oil was always refluxed in toluene with a small amount of acetic acid to decompose any salts that escaped filtration and particularly oil soluble salts such as the sodium mercaptides.

Hydrogen sulfide was liberated from any Na_2S or NaSH that escaped filtration. The salt product from this step was sodium acetate which was filtered from solution. Finally, desulfurized oil was recovered by distillation. The acetic acid-treated sample was used as a control to establish the effectiveness of the salt recovery procedure being evaluated, i.e., to determine how much sodium (in the form of the salt) was left in the oil after extraction. Also, it was the practice to sample the sodium-treated oil prior to testing a salt recovery scheme and removing the salts by decomposing with acetic acid. This allowed a comparison of the properties of desulfurized oil both before and after the particular salt recovery procedure being evaluated.

(I) Sulfur-containing feedstocks

This invention has been demonstrated with several different sulfur-containing feedstocks. These include both the 650+° F. and 1030+° F. fractions of the Bachequero and Tia Juana crudes from South America and also the Kuwait and Safaniya crudes from the Middle East. Examples hereinbelow, however, are all based on the 650+° F. Safaniya fraction, which is considered to be typical of the residuum feeds to be encountered commercially. The properties of this feed are noted below.

INSPECTIONS ON SAFANIYA ATMOSPHERIC RESIDUUM

API gravity	14.4
Sulfur, wt. percent	4.1
Nitrogen, wt. percent	0.26
Oxygen, wt. percent	0.27
Metals, p.p.m. (w.):	
Ni	20
V	77
Fe	4
Viscosity, VSF @122° F.	235
Pour point, ° F.	33
Percent boiling below 1030° F.	59.2
Percent boiling above 1030° F.	40.8

EXAMPLE 1

This example demonstrates the effect of controlled water addition on microcrystalline salt agglomeration.

In the desulfurization reaction, 489.6 g. of oil (contains 0.595 g.-atom sulfur) was contacted with 36.2 g. (1.57 g.-atom) of sodium for 1.0 hour at 650° F. under an atmosphere of nitrogen. While still at 650° F., there was injected 13.5 g. (0.75 mole) of water. Reaction with the water was instantaneous and no buildup in reactor pressure occurred. The amount of water added amounted to approximately 78 mole percent on total moles of salt contained.

After a 5 minute stirred contact at 650° F., the reactor was cooled at room temperature, opened and the oil phase decanted. There remained in the bomb an oil slurry of precipitated salts which was subsequently washed with toluene and then dried under vacuum. There was recovered 58.3 g. of tan powder which exhibiited a particle

size of approximately 150 microns. This size makes the salt readily amenable to recovery from the oil by filtration or by centrifugation techniques. No attempt was made to obtain a quantitative recovery of salts although the actual recovery is close to the theoretical value of 62 g. Salt analysis is given below in Table I.

TABLE I.—WATER-PRECIPITATED SALT ANALYSIS

Component	Wt. percent	Mole percent (normalized)
Na_2S	61.0	55.5
Na_2S_2	0.0	0.0
NaOH	23.2	41.2
Na_2CO_3	3.7	2.4
Na_2SO_3	0.0	0.0
$Na_2S_2O_3$	0.3	0.1
Na_2SO_4	1.5	0.8
H_2O insoluble	3.9	

The primary by-product salt is sodium hydroxide, which is obtained from the hydrolysis of sodium oxide, organosodium compounds, sodium amides, etc. Presumably the molten NaOH is responsible for agglomerating the microcrystalline salts.

Conversion to sodium tetrasulfide was accomplished by blending 20 g. of the mixture with 152 g. (0.74 mole) of sodium pentasulfide, heating to form a melt at 600° F., and then stirring and bubbling with H_2S until the resultant evolution of water ceased (about 30 minutes). There was collected 2.5 g. of water which is about 89% of the calculated amount. The melt was cooled and analyzed.

The results, Table II, show complete removal of sodium hydroxide but a relatively large amount of NaSH. A more stringent Na_2S_5–H_2S treatment should remove the NaSH.

TABLE II.—POLYSULFIDE MELT COMPOSITION [1]

Component:	Mole percent (normalized)
Na_2S_R [2]	90.0
Na_2SO_3	0.0
Na_2SO_4	1.4
Na_2CO_3	1.7
NaSH	6.3
$Na_2S_2O_3$	0.6

[1] Melt analyzed for 26.0 wt. percent Na, 73.0 wt. percent S. Calculated for Na_2S_4: 26.4 wt. percent Na, 73.6 wt. percent S.
[2] Analytical procedure does not distinguish between the various polysulfides, hence, the notation "Na_2S_R."

Inspection of the desulfurized oil product (see Table III) showed that sodium treating had removed 89.4% of the sulfur and that the combination sodium treating and water precipitation steps had not degraded the oil. If anything there was a slight improvement in API gravity and a reduction in asphaltene content, however, still fairly high even after filtration. Acetic acid treatment as shown in Table III drops the sodium content to a low level.

TABLE III

Sample	Feed	Oil from H_2O precipitation step: After filter	After acid treatment
Inspection:			
Sulfur, wt. percent	3.9	0.4	0.4
Asphaltene, wt. percent	14.9	13.0	13.0
Vanadium, p.p.m.	77	59	59
Sodium, p.p.m.	<5	2,800	110
API gravity	14.4	16.9	

EXAMPLE 2

This example demonstrates the facile separation of macrocrystalline salt agglomerates formed from the addition of excess amounts of water to the oil-salt dispersion.

The desulfurization reaction was carried out by contacting 400.6 g. (contains 0.494 g.-atom sulfur) of Safaniya Atmospheric Residuum with 24.6 g. (1.07 g.-atom) of sodium for 1.0 hour at 650° F. under 150 p.s.i.g. hydrogen pressure. The hydrogen consumed amounted to 0.44 mole. At the end of the reaction period, hydrogen was vented until the reactor pressure dropped to 50 p.s.i.g.

At the end of the reaction period there was injected 13.9 g. (0.77 mole—i.e., 130 mole percent based on total moles of salt in the mixture) of water and stirring was continued for 5 minutes at 650° F. The reactor was then cooled to 200° F. with stirring. Upon opening the reactor and decanting the oil, it was found that the salts had settled to the bottom of the reactor in the form of spherical particles ranging in size from about 0.5 mm. up to 4.0 mm. diameter. This size coupled with the high density of the salt (~2.0 g./ml.) causes the salt particles to literally plummet from hot oil thereby simplifying the separation of salts from the oil. After washing with toluene, the salts were dried under 10 mm. vacuum at 200° F. Most of the water of hydration was removed at this point. The dry solids gave the analysis shown in Table IV below.

TABLE IV.—WATER PRECIPITATED SALT ANALYSIS

Component	Wt. percent	Mole percent (normalized)
Na_2S	70.0	62.7
Na_2S_2	2.0	1.3
NaOH	19.8	34.6
Na_2CO_3	1.6	1.2
Na_2SO_3	0.6	0.2
$Na_2S_2O_3$	0.0	0.0
Na_2SO_4	0.0	0.0
H_2O insoluble	2.7	

A 20 g. sample of the precipitated salt was converted to sodium tetrasulfide by blending with 143 g. (0.695 mole) of sodium pentasulfide and treated according to the procedure noted in Example 1. Analysis of the product salt, 161 g. is given in Table V.

TABLE V.—ANALYSIS OF POLYSULFIDE MELT [1]

Component:	Mole percent (normalized)
Na_2S_R	79.1
NaSH	18.2
Na_2CO_3	2.7

[1] Melt analyzed for 25.3 wt. percent sodium and 73.5 wt. percent sulfur. Calculated for Na_2S_4: Na, 26.4 wt. percent S, 73.6 wt. percent.

Inspection of the desulfurized oil product (Table VI) showed that the reaction with sodium and hydrogen has removed 92.8 percent of sulfur, 58% of the vanadium and has substantially improved the oil quality relative to the feed and to the product obtained in Example 1. A more stringent Na_2S_5—H_2S treatment should remove the NaSH.

TABLE VI.—DESULFURIZED OIL INSPECTIONS

Sample	Oil from salt recovery step: After filtration	After acetic acid treatment
Inspection:		
Sulfur, wt. percent	0.28	0.29
Asphaltenes, wt. percent	6.5	
Vanadium, p.p.m.	30	38
Sodium, p.p.m.	1,850	40
API gravity	22.4	

Again, however, the sodium content of the filtered oil is high. Presumably, oil soluble sodium mercaptides are responsible. As in Example 1, acetic acid treatment followed by filtration removed most of the residual sodium.

EXAMPLE 3

This example illustrates the effect of large excesses of water on salt separation.

Example 2 was repeated with the exception that 27.7 g. (1.54 mole—i.e., 260 mole percent based on total moles of salt in the mixture) of water was injected. Upon cooling to 200° F., it was found that there were no precipitated salts; rather, the salts were suspended in the oil in the form of a milky brown emulsion.

EXAMPLE 4

This example illustrates the microcrystalline character of the salts produced in sodium treating residua and the inherent difficulties encountered in attempting to resolve the oil and salt phases.

The desulfurization reaction described in Example 2 was repeated except that water was not added at the end of the reaction period. Rather, the reactor contents were cooled to room temperature and discharged.

A thin film of the reactor product spread on a glass plate appeared simply as a hazy, brown oil. Salt crystals were not evident. However, electron microscopy showed that the hazy character of the oil was imparted by microcrystalline desulfurization salts (Na_2S, Na_2O, NaOH etc.). The largest particle size was on the order of one micron.

The stability of this salt in oil dispersion was illustrated by diluting a portion with 300 volume percent toluene and allowing to stand 48 hours. At the end of this period no appreciable settling of the salt phase was noted.

Filtration of the reaction mixture at 180° F. through a number 2 grade Whatman paper produced no filter cake. The same result was obtained when the toluene diluted sample was filtered.

Clearly, mixtures of oil and sodium salts produced by sodium treating cannot be easily resolved by conventional means, i.e., by settling or by filtration. A preconditioning step is needed to increase the size of the salt particles.

What is claimed is:

1. A process for the desulfurization of a sulfur-containing petroleum oil stock comprising contacting said oil stock with a desulfurization agent selected from the group consisting of the alkali metals and alloys thereof, at desulfurization conditions, thereby forming a mixture comprising oil of reduced sulfur content containing alkali metal salts dispersed therein and contacting at least a portion of said mixture with about 10 to about 80 mole percent water, based on the total number of moles of salt present in the mixture, at an elevated temperature ranging above about 610° F., thereby disengaging a substantial portion of said alkali metal salts from said oil at said elevated temperature and forming a salt phase and an oil phase of reduced sulfur content.

2. The process of claim **1** wherein said alkali metal comprises sodium and said alloy comprises sodium and lead.

3. A process for the desulfurization of a sulfur-containing petroleum oil stock comprising contacting said oil stock with a desulfurization agent selected from the group consisting of sodium and alloys thereof, at desulfurization conditions, thereby forming a mixture comprising oil containing alkali metal salts, contacting at least a portion of said mixture with between about 10 and about 80 mole percent water, based on total number of moles of salt present in the mixture, thereby forming a mixture comprising an oil phase of reduced sulfur content and a salt phase, contacting at least a portion of said salt phase with a sulfur-rich sodium polysulfide, thereby forming a sodium polysulfide having a reduced sulfur content, and, thereafter using at least a portion of said sodium polysulfide having a reduced sulfur content as an electrolyte in an electrolytic cell for the production of sodium.

4. The process of claim **3** wherein said salt phase is contacted with H_2S in addition to said sulfur-rich sodium polysulfide.

5. The process of claim **4** wherein said water is added to said mixture at a temperature ranging between about 610 and 800° F., and at a pressure ranging between about atmospheric pressure and about 100 p.s.i.g.

6. The process of claim **3** wherein said sulfur-rich sodium polysulfide is represented by the formula Na_2S_x where x takes values ranging from about 4.0 to 4.9 and said sodium polysulfide having a reduced sulfur content is represented by the formula Na_2S_y where y takes values ranging from about 2.8 to 4.5.

7. The process of claim **3** wherein said electrolytic cell comprises an anodic cavity containing polysulfide anions and a cathodic cavity containing sodium metal, said anodic and cathodic cavities separated by a sodium ion-conducting membrane comprising beta-alumina.

8. The process of claim **3** wherein said oil phase is contacted with an acid selected from the group consisting of H_2S, acetic acid and dilute sulfuric acid.

9. A process for the desulfurization of a sulfur-containing petroleum oil stock comprising contacting said oil stock with a desulfurization agent selected from the group consisting of sodium and alloys thereof, at desulfurization conditions, thereby forming a mixture comprising oil containing alkali metal salts, contacting at least a portion of said mixture with from about 110 to about 200 mole percent water based on total number of moles of salt present in the mixture, at a temperature ranging between about 500 and 650° F. and at a pressure ranging between about 100 and 500 p.s.i.g., cooling the water-treated mixture to a temperature below about 250° F. thereby forming a salt phase and an oil phase of reduced sulfur content, contacting at least a portion of said salt phase with a sulfur-rich sodium polysulfide thereby forming a sodium polysulfide having a reduced sulfur content, and, thereafter, using at least a portion of said sodium polysulfide having a reduced sulfur content as an electrolyte in an electrolytic cell for the production of sodium.

10. The process of claim **9** wherein said salt phase is contacted with H_2S in addition to said sulfur-rich sodium polysulfide.

11. The process of claim **9** wherein said sulfur-rich sodium polysulfide is represented by the formula Na_2S_x where x takes values ranging between about 4.0 and 4.9 and said sodium polysulfide having a reduced sulfur content is represented by the formula Na_2S_y where y takes values ranging between about 2.8 and 4.5.

12. The process of claim **9** wherein said sulfur-rich sodium polysulfide is Na_2S_5.

13. The process of claim **9** wherein said electrolytic cell comprises an anodic cavity containing polysulfide anions and a cathodic cavity containing sodium metal, said anodic and cathodic cavities separated by a sodium ion-conducting membrane comprising beta-alumina.

14. The process of claim **9** wherein said oil phase is contacted with an acid selected from the group consisting of H_2S, acetic acid and dilute sulfuric acid.

15. A process for the desulfurization of a sulfur-containing petroleum oil stock comprising contacting said oil stock with a desulfurization agent selected from the group consisting of the alkali metals and alloys thereof, at desulfurization conditions, thereby forming a mixture comprising oil of reduced sulfur content containing alkali metal salts, contacting said mixture with between about 110 and 200 mole percent water, based on total number of moles of salt present in the mixture, at a temperature above about 500° F., and, thereafter, cooling the water-treated mixture to a temperature below about 200° F.,

thereby disengaging a substantial portion of said alkali metal salts from said oil and forming an oil phase of reduced sulfur content and a salt phase.

References Cited

UNITED STATES PATENTS

3,004,912	4/1964	Kaneko	208—208
3,093,575	6/1963	Kimberlin, Jr. et al.	208—208 M
3,565,792	2/1971	Haskett	208—208 M
2,020,661	11/1935	Schulze et al.	208—230
3,164,545	1/1965	Mattox	208—230

3,488,271	5/1968	Kummer	204—180
3,404,036	10/1968	Kummer	136—6
3,468,709	9/1969	Kummer	136—6
3,446,677	5/1969	Tennenhouse	136—6
3,475,225	10/1969	Tennenhouse	136—6

DELBERT E. GANTZ, Primary Examiner

J. M. NELSON, Assistant Examiner

U.S. Cl. X.R.

208—230, 229, 226, 235, 294; 204—68