United States Patent [19]

Allsop et al.

[11] **3,791,663**

[45] **Feb. 12, 1974**

[54] **SAFETY STRAP RETAINER**

[76] Inventors: **Ivor J. Allsop; Jon I. Allsop; Michael G. Allsop; James D. Allsop,** all of P.O. Box 23, Bellingham, Wash. 98225

[22] Filed: **Sept. 22, 1972**

[21] Appl. No.: **291,176**

Related U.S. Application Data

[63] Continuation-in-part of Ser. No. 191,313, Oct. 21, 1971.

[52] **U.S. Cl.** ..... **280/11.35 N**

[51] **Int. Cl.** **A63c 9/00**

[58] **Field of Search** 280/11.35 N; 24/208 A, 201 BS

[56] **References Cited**

UNITED STATES PATENTS

3,452,999	7/1969	Salomon	280/11.35 N
1,479,150	1/1924	Mellus	24/208 A UX
3,549,163	12/1970	Wiedermann	280/11.35 N

FOREIGN PATENTS OR APPLICATIONS

1,182,562	11/1964	Germany	280/11.35 N
268,115	1/1969	Austria	280/11.35 N
24,561	10/1883	Germany	24/201 BS

Primary Examiner—David Schonberg
Assistant Examiner—Milton L. Smith
Attorney, Agent, or Firm—Sherman Levy

[57] **ABSTRACT**

A safety strap retainer for ski boots that includes a member that is connected to a heel clamp whereby a ski boot will remain safely and conveniently connected to the ski.

7 Claims, 7 Drawing Figures

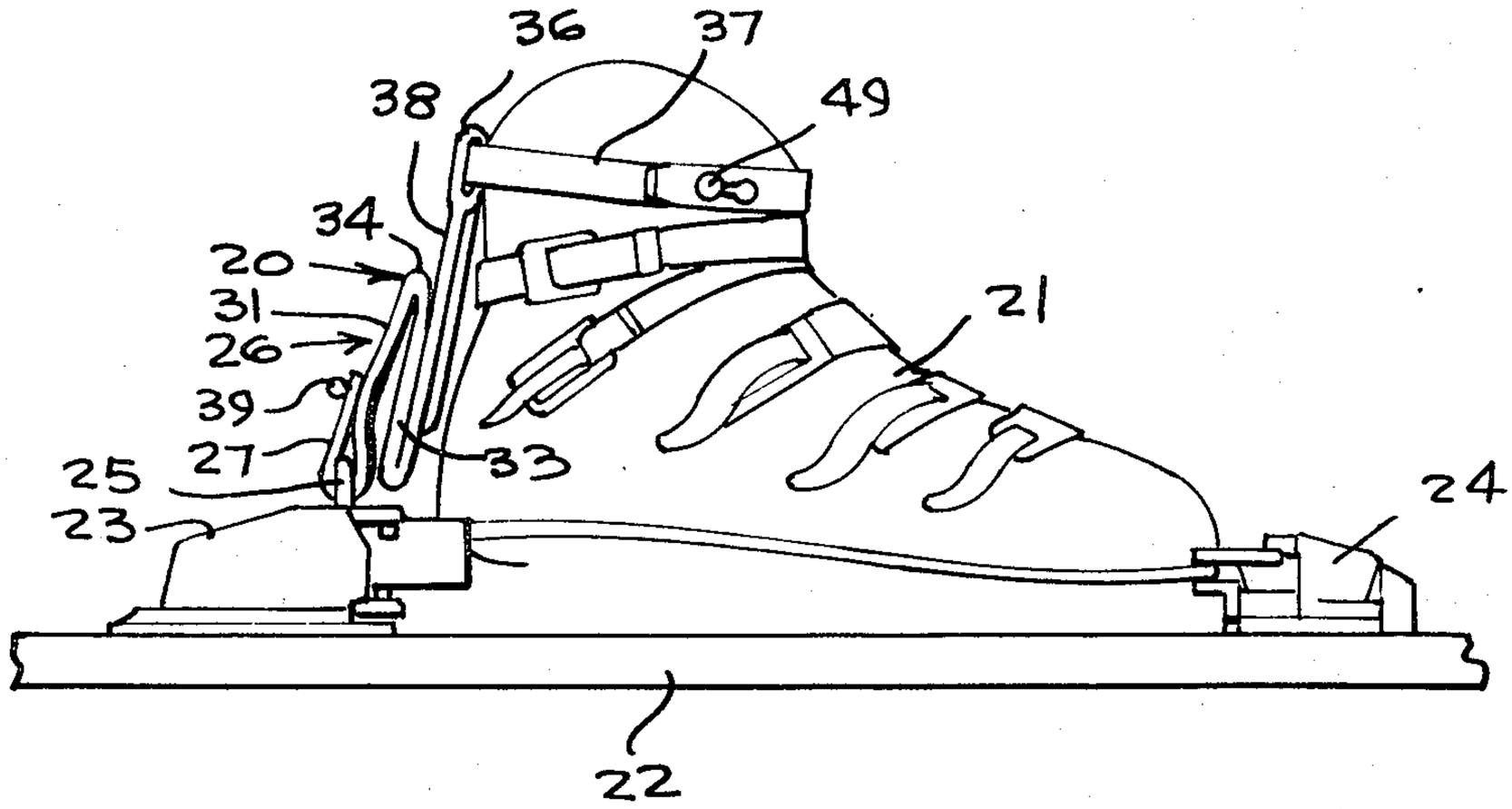

Fig-1

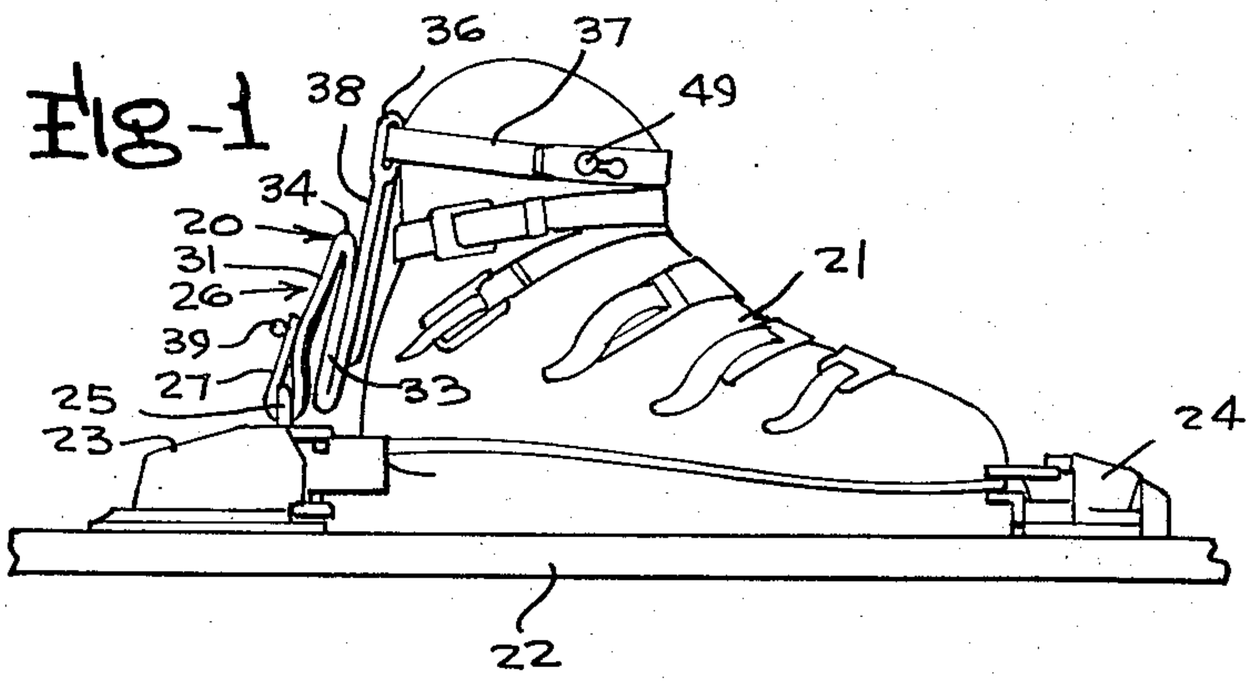

Fig-7

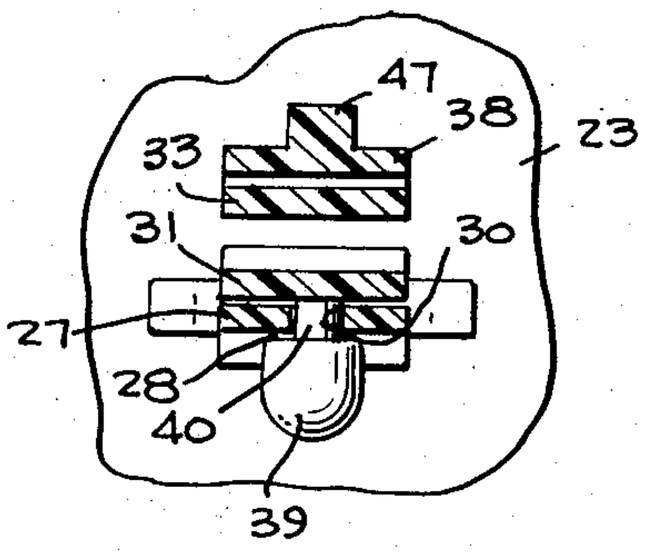

Fig-2

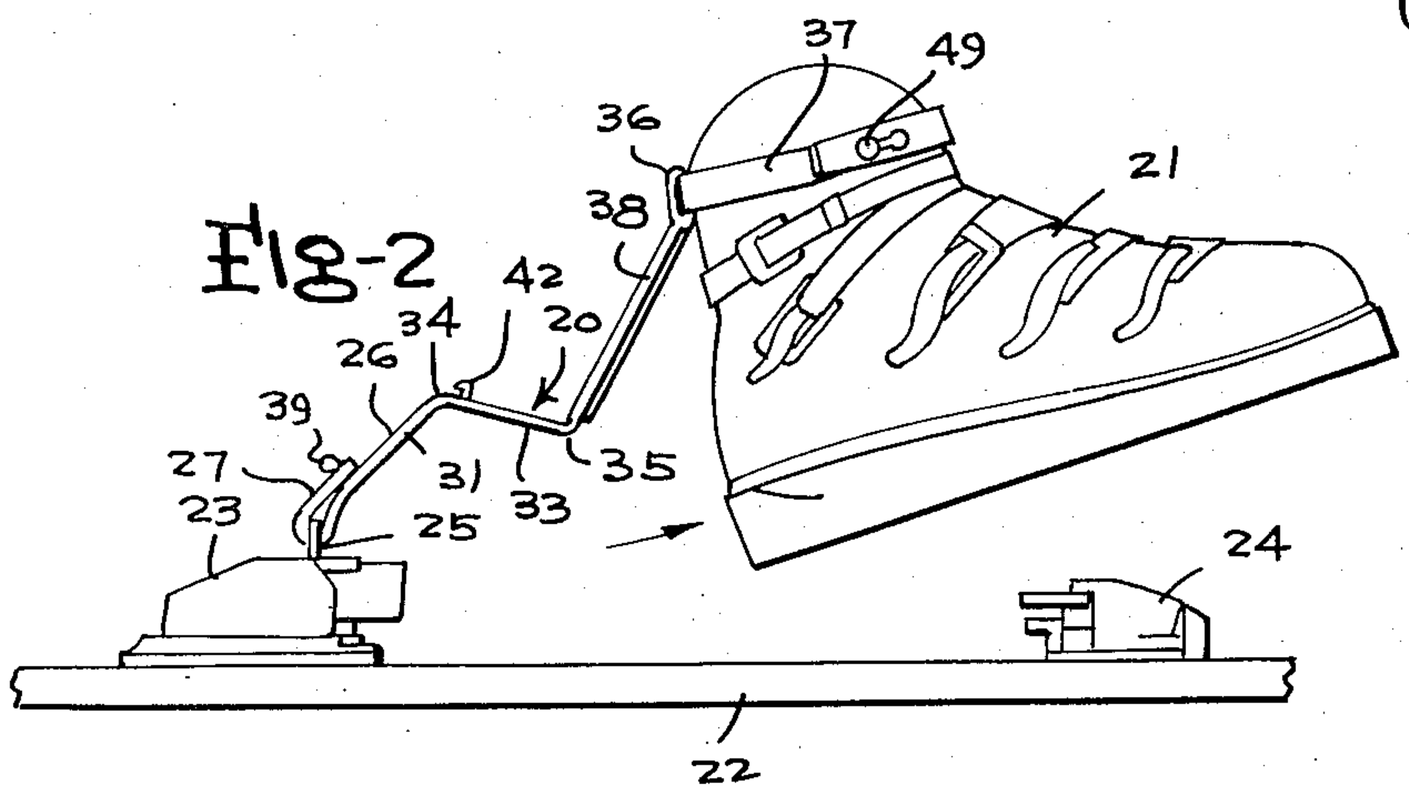

Fig-6

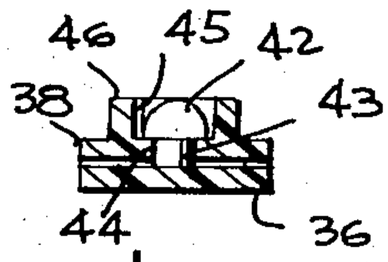

Fig-5

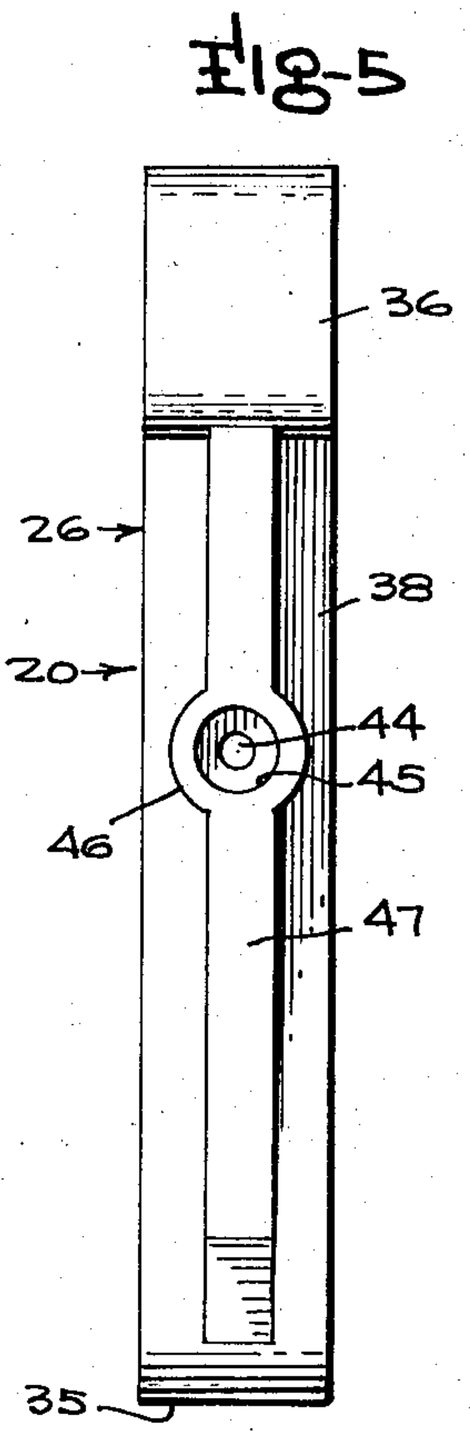

Fig-3

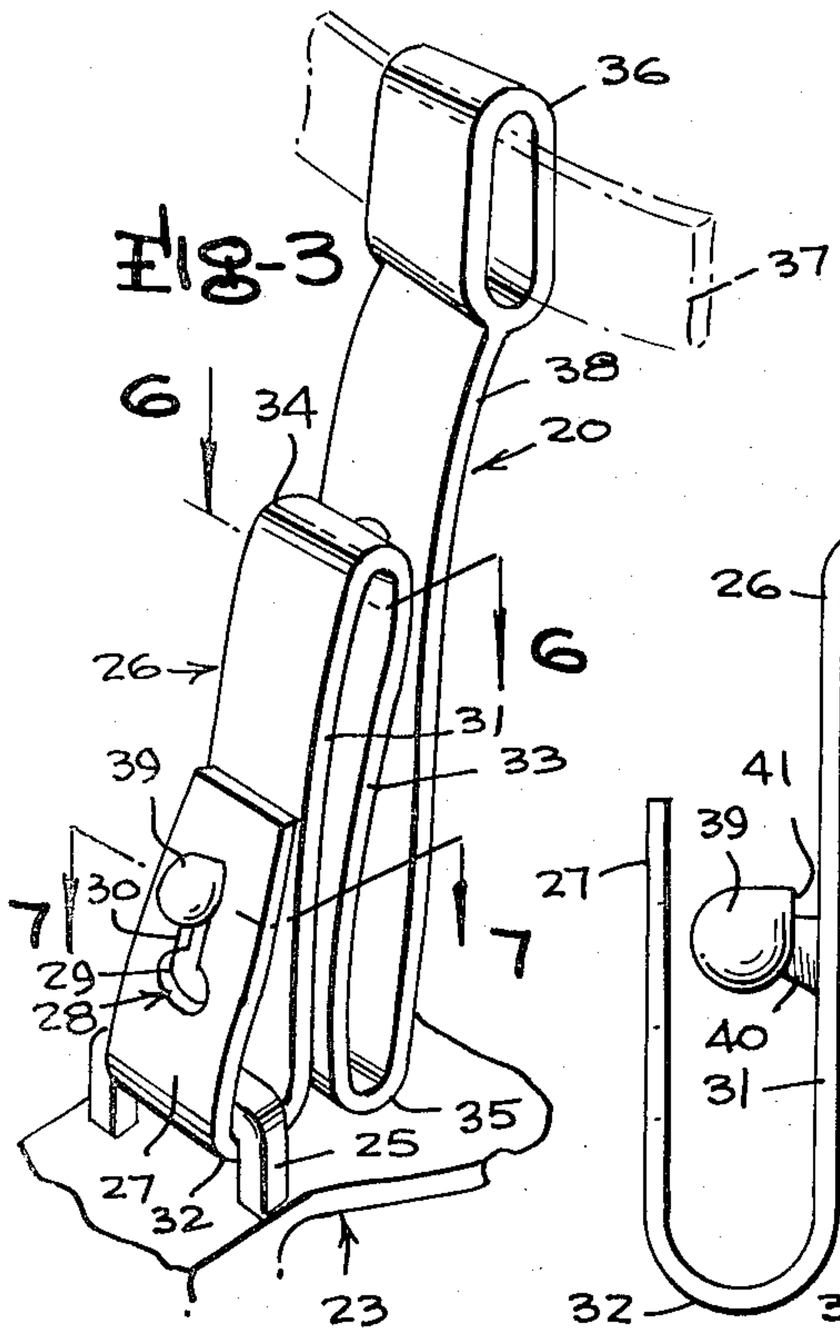

Fig-4

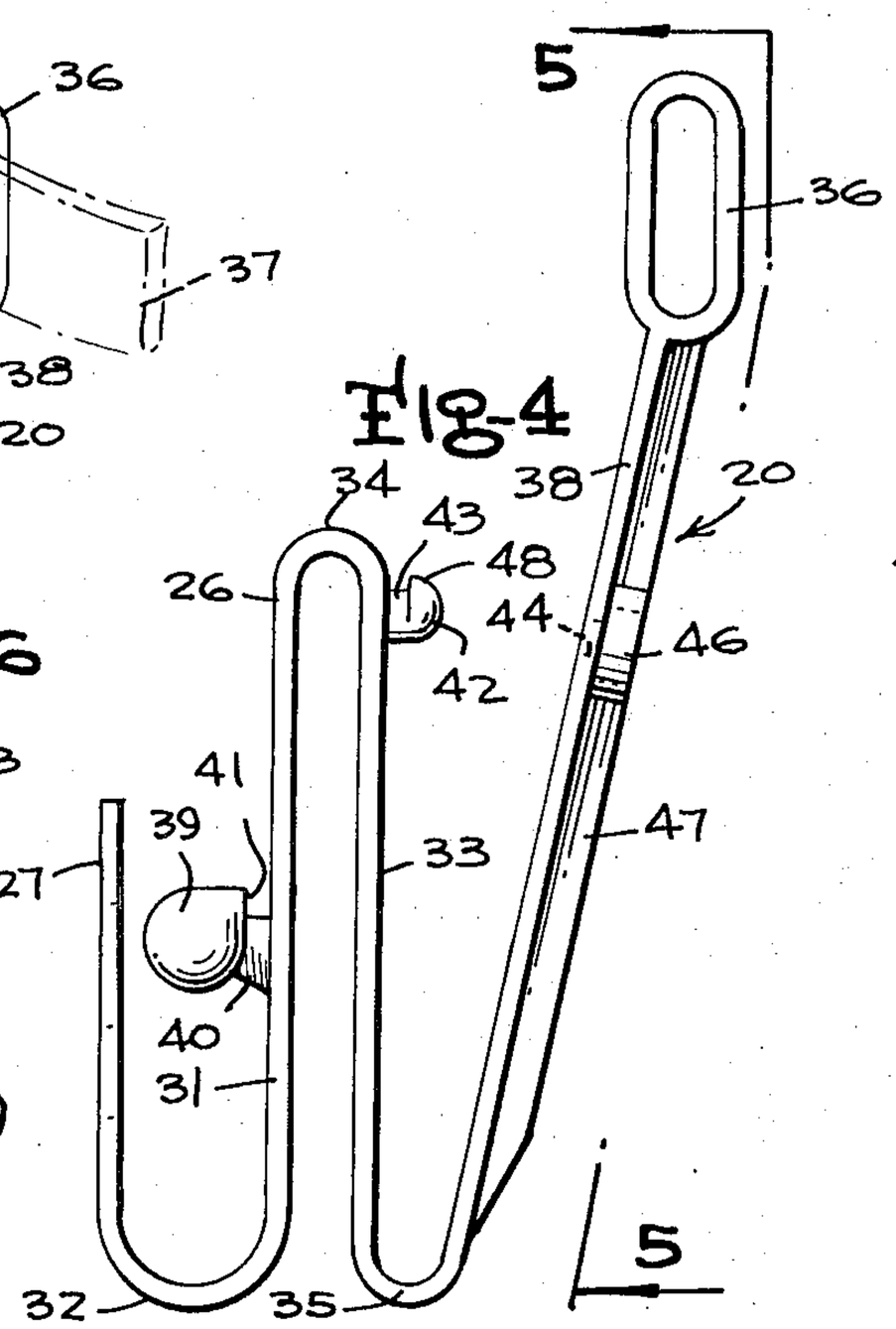

SAFETY STRAP RETAINER

CROSS-REFERENCE TO RELATED APPLICATION

This application is a continuation-in-part of patent application Ser. No. 191,313, filed Oct. 21, 1971.

The present invention relates to a safety strap retainer for ski equipment.

An object of the present invention is to provide a safety strap retainer that will facilitate the repositioning of the strap after the device has been extended during a fall or the like.

A still further object of the present invention is to provide a safety strap retainer that has a fold at the bottom that sits on top of the binding in order to hold the strap in an upright position in order to assure that the user will not have to stoop to untangle the strap from under the ski and the like.

Still another object is to provide such a safety strap retainer that is constructed so that when the user wishes to lay the strap down while placing the same in a ski rack, a vehicle or in a ski bag, it is only necessary to move the bottom fold forward and place it between the two heel lugs of the binding so that the entire assembly will rotate forwardly and lie down flush with the top of the binding.

Yet another object of the invention is to provide a safety strap retainer that can be connected up in a minimum amount of time and which device is simple in construction, easy to use and relatively low in the cost of manufacture.

With these objects in mind and others which will become manifest as the description proceeds, reference is to be had to the accompanying drawings in which like reference characters designate like parts in the several views thereof, in which:

FIG. **1** is a side elevational view of the safety strap retainer of the present invention shown connected to a ski boot.

FIG. **2** is a view generally similar to FIG. **1**, but showing the device snapped loose.

FIG. **3** is a perspective view of the safety strap retainer of the present invention.

FIG. **4** is a side view of the safety strap retainer unsnapped.

FIG. **5** is an elevational view, taken on the line **5—5** of FIG. **4.**

FIG. **6** is a sectional view, taken on the line **6—6** of FIG. **3.**

FIG. **7** is a sectional view taken on the line **7—7** of FIG. **3.**

Referring in detail to the drawings, the numeral **20** indicates the safety strap retainer of the present invention for use with a ski boot **21** and ski **22,** and the ski **22** has a heel clamp **23** and a toe clamp **24** thereon. The heel clamp **23** has a bracket **25** affixed thereto, FIG. **3.** The safety strap **20** of the present invention includes a body member **26** that may be made of a suitable material such as plastic, and the body member **26** includes a first portion **27** that has a key slot **28** therein. And the key slot **28** includes an enlarged circular section **29** as well as a narrow straight section **30.** The body member **26** further includes a second portion **31** that is joined to or connected to the first portion **27** by means of a fold or curved section **32.**

The body member **26** further includes a third portion **33** that is joined to the second portion **31** by means of

a fold or arcuate section **34,** and a bottom fold section or arcuate section **35** connects the lower end of the third portion **33** to a fourth section **38.** The fourth portion **38** has a loop **36** on the upper end thereof for the projection therethrough of a horizontally disposed strap **37,** and the strap **37** is adapted to surround a portion of the ski boot **21,** and the strap **37** has ball and socket retainers **49** similar to those shown and described in prior U.S. Pat. application Ser. No. 191,313.

The numeral **39** indicates a lug that is connected to the second portion **31** by means of a shank **40,** and the lug **39** has a shoulder **41** thereon. The lug **39** is adapted to selectively engage the key slot **28,** as shown in FIG. **3.**

The numeral **42** indicates a keeper or lug that is connected to or formed integral with the portion **33** by means of a shank **43,** and the lug **42** has a shoulder **48** thereon. The lug **42** is adapted to engage an aperture or opening **44** in the portion **38** with a snap fit, there being a circular recessed section **45** surrounding the opening **44,** and a flanged portion **46** surrounds the recessed portion **45.** The numeral **47** indicates an elongated rib portion on one side of the portion **38.**

From the foregoing, it will be seen that there has been provided a safety strap retainer, and in use with the parts arranged as shown in the drawings, when the parts are properly assembled, the parts will be in a position such as that shown in FIGS. **1** and **3.** In these positions, the lug **39** snugly engages the narrow portion **30** of the key slot **28** so as to maintain the body member **26** connected to the bracket **25.** Also, in this position, the lug **42** is snapped in the opening **44** to maintain the parts in their properly assembled position. In this position, the strap **37** extends through the loop **36** and encircles a portion of the ski boot **21** and wherein the ball retainers **49** maintain the strap **37** properly connected in position.

Due to the provision of the releasable lug **42** and coacting opening **44,** it will be seen that at times the parts can move to the position shown in FIG. **2,** since the keeper or lug **42** can snap loose from the opening **44** to permit the member **26** to expand or extend.

The parts can be made of any suitable material and in different shapes or sizes as desired or required.

The safety harness or strap of the present invention is constructed and arranged so that for example, as compared to the device shown in prior U.S. Pat. application Ser. No. 191,313, it will be easier to reposition after it has been extended during a fall, since all that needs to be done is to press the portions of the strap together, and it will snap together and hold until they are forced apart in another fall.

Further, the safety strap retainer of the present invention is constructed so that the fold at the bottom sits on the top of the binding **23** in order to hold the strap in an upright position, whereby the user does not have to stoop to untangle the strap from under the ski and the like.

Furthermore, the safety strap retainer is constructed so that when the user wishes to lay the strap down while placing the device in a ski rack, or an automobile, or in a ski bag, it is only necessary to move the bottom fold forward and place it between the two heel lugs of the binding whereby the entire assembly will rotate forward and lay down flush with the top of the binding.

With the present invention, there is provided a safety strap retainer that will prevent the ski from running away in the event that it separates from the user or wearer. Also the present invention will facilitate the putting on or removal of bindings.

The strap **39** around the ankle will have a tendency to stand erect or semi-erect so as to assure that the strap will normally be within easy reach when a person is putting his or her foot into the ski binding. The present invention provides a unique, efficient clamping connecting means between the strap **37** and the heel clamp **23.** When it is desired to entirely separate or move the retainer from the ski, the lug **39** can be disengaged from the slot **28** to permit the parts to be disconnected. However, during normal use, the parts will not become accidentally separated.

The device can be snapped opened or closed in two different places, that is by means of the lug **39** and the keeper **42.** When skiing, both of these members are snapped in closed position, as shown in FIGS. **1** and **3,** and in the event of a fall, the keeper **42** will separate from the opening **44** to give increased leeway or space so that the user can get farther away before an ankle or the like is twisted. In addition, the present invention makes it easier to get into, since the parts can be unsnapped and positioned in the desired location.

It is of course to be understood that the embodiments of the invention are for purposes of illustration only and that the scope of the invention is to be limited only by the following claims:

What is claimed is:

1. In a safety strap retainer for a ski boot, for use with a ski having heel and toe clamps, the heel clamp having a bracket thereon, a body member operatively connected to said bracket including portions connected together by folds, means on selected adjacent portions for releasably connecting certain of said adjacent portions together, and a loop on the body member for receiving a strap that encircles a portion of the ski boot.

2. The structure as defined in claim **1,** wherein the body member includes interconnected first, second, third and fourth portions.

3. The structure as defined in claim **1,** wherein the body member includes a first portion that has a key slot therein, and a second portion adjacent said first portion that has a lug for releasably engaging the key slot said key slot and lug comprising said means for connecting certain of said portions together.

4. The structure as defined in claim **1,** wherein the body member includes, first, second, third and fourth interconnected portions, and the means for connecting certain of said portions together comprises the first portion having a key slot therein, a lug on said second portion for detachably engaging said key slot, said third portion having a keeper thereon, said fourth portion having a recessed aperture for selectively receiving the keeper.

5. In a safety harness or strap for a ski boot in combination with a ski having a heel and toe clamp, a bracket on the heel clamp, a body member engaging said bracket and having a first portion having a key slot therein, said key slot including a circular enlarged lower section and a straight upper section, a second portion spaced from said first portion and joined thereto by a fold section, a third portion joined to said second portion by a fold section, a fourth portion joined to said third portion by a curved fold section, a loop on the upper end of the fourth portion, said loop having a horizontally disposed strap extending therethrough, and said strap adapted to surround a portion of the ski boot, a lug on said second portion for engaging the key slot in the first portion, a keeper connected to said third portion, there being a recessed aperture in said fourth portion for selectively receiving said keeper with a snap fit.

6. As a new article of manufacture, a safety strap retainer for a ski boot, said safety strap retainer comprising a body member adapted to be connected to a heel binding including a first portion, a second portion joined to said first portion by a fold section, a third portion joined to said second portion by a fold section, a fourth portion joined to said third section by a fold section, said fourth portion having a loop therein for receiving a strap, and releasable means on the third and fourth portions operatively connecting the third and fourth portions together.

7. The structure as defined in claim **6,** in which the portions can be pressed together after a fall to reposition the extended portions together until another fall, and wherein a fold at the bottom of the retainer is adapted to sit on top of the binding to hold the strap in upright position to assure that the user will not have to stoop to untangle the strap, and wherein if it is desired to lay the strap down while placing the same in a ski rack, vehicle, ski bag and the like, it is only necessary to move the bottom fold forward and place it between portions of the heel binding and whereby the entire assembly can rotate in a forward direction and will lay down flush with the top of the binding.

* * * * *