United States Patent [19]

Pirker et al.

[11] **3,776,216**

[45] **Dec. 4, 1973**

[54] **SELF-CLEANING OVEN**

[75] Inventors: **Rudolf Pirker**, Noremberg; **Roland Kelchner**, Furth/Bayern, both of Germany

[73] Assignee: **Licentia Patent-verwaltungs G.m.b.H.**, Frankfurt am Main, Germany

[22] Filed: **Nov. 9, 1972**

[21] Appl. No.: **304,951**

[30] **Foreign Application Priority Data**

Nov. 9, 1971 Germany ..... P 21 55 570.4

[52] **U.S. Cl.** **126/197**

[51] **Int. Cl.** **F24c 15/02**

[58] **Field of Search** 126/197, 273, 19, 126/39; 219/412

[56] **References Cited**

UNITED STATES PATENTS

3,313,918	4/1967	Barber	126/197 X
3,416,515	12/1968	Mertler	126/197 X
3,469,568	9/1969	Torrey et al.	126/197 X
3,638,638	2/1972	Phifer	126/197

Primary Examiner—Edward G. Favors

Attorney—George H. Spencer et al.

[57] **ABSTRACT**

In apparatus for automatically heat-cleaning the interior surfaces of an oven having a locking member for locking the oven door during the cleaning process; a timer for controlling the cleaning operation; a blocking device for maintaining the door in its locked position during the operation; and a bimetal control device connected to the timer and the blocking device for actuating the blocking device and for preventing the timer from being reset after the cleaning operation has begun and while the temperature in the oven remains above a certain value.

4 Claims, 5 Drawing Figures

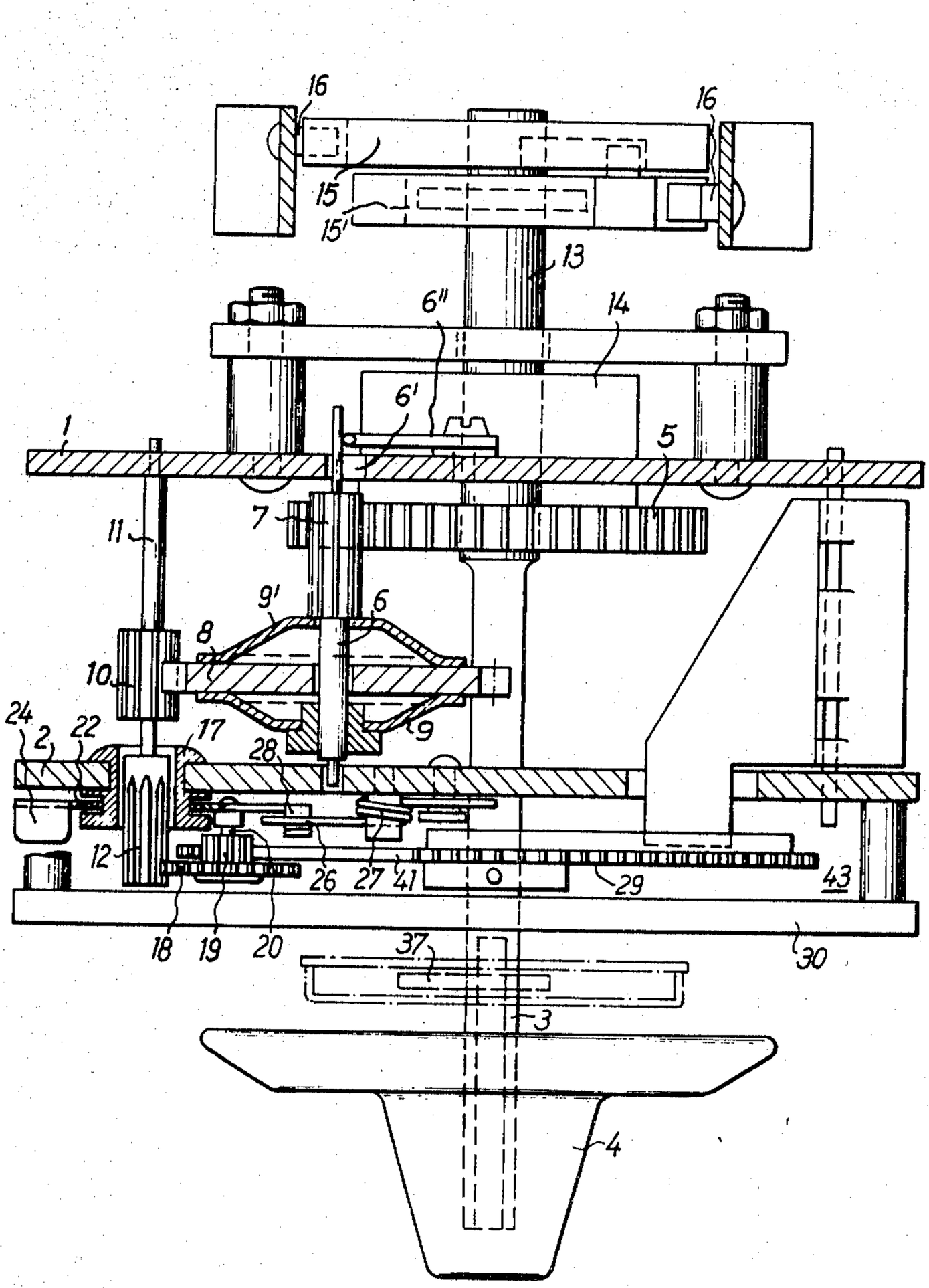

Fig.1

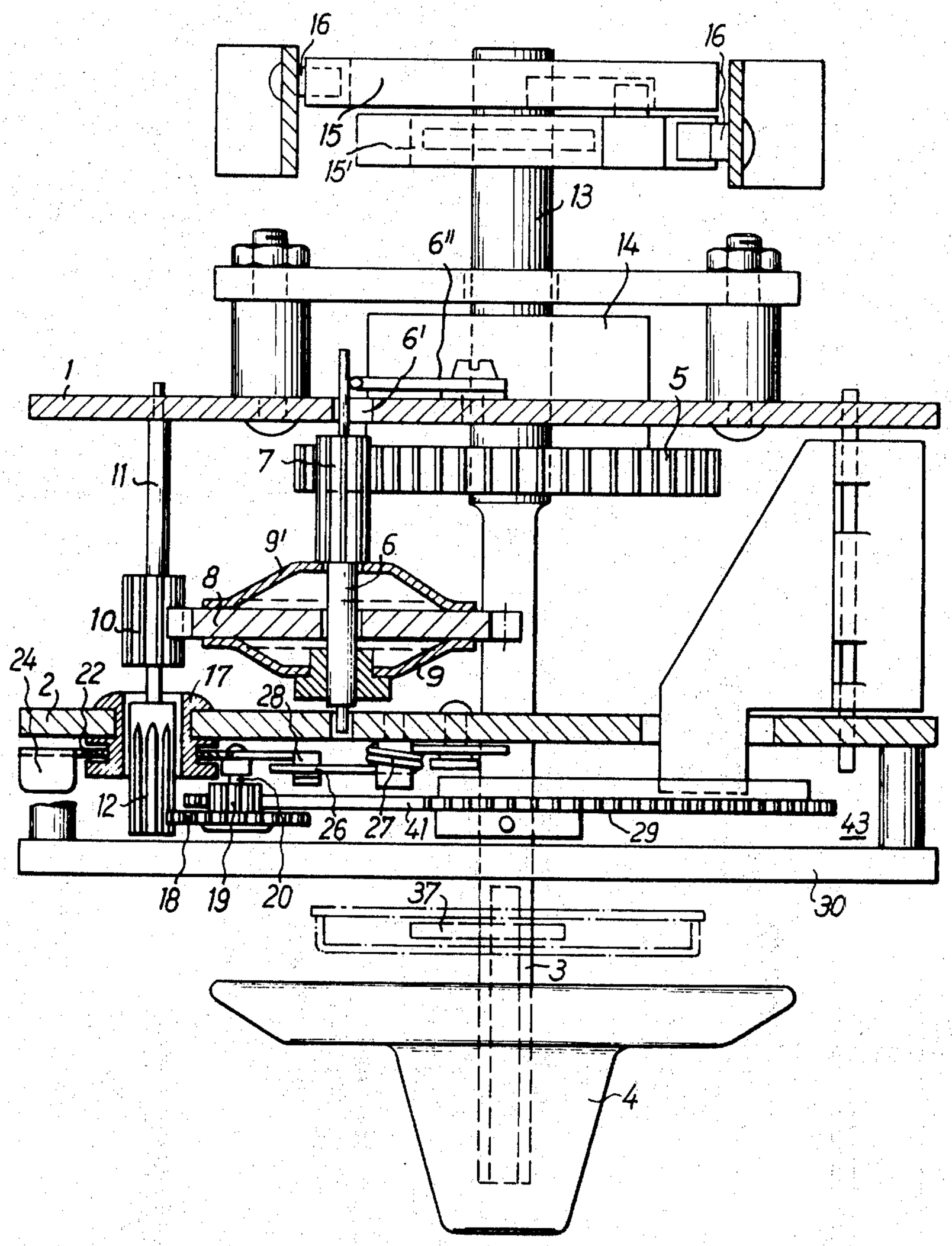
16
16
15
15'
13
6"
14
6'
1
5
7
11
9'
6
8
10
9
24
2
22
17
28
12
26
27
41
29
43
18
19
20
37
30
3
4

Fig. 2

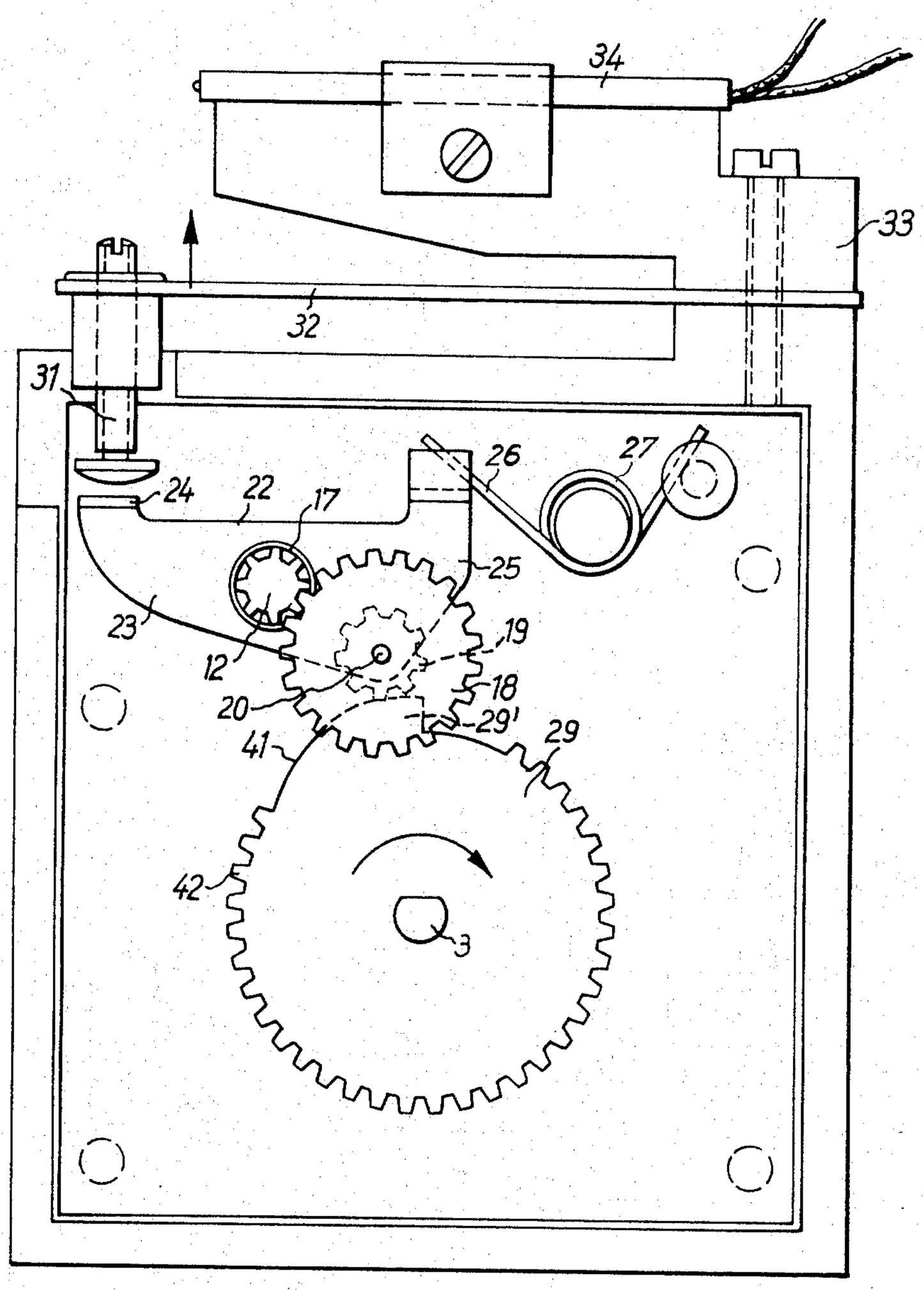

Fig. 3

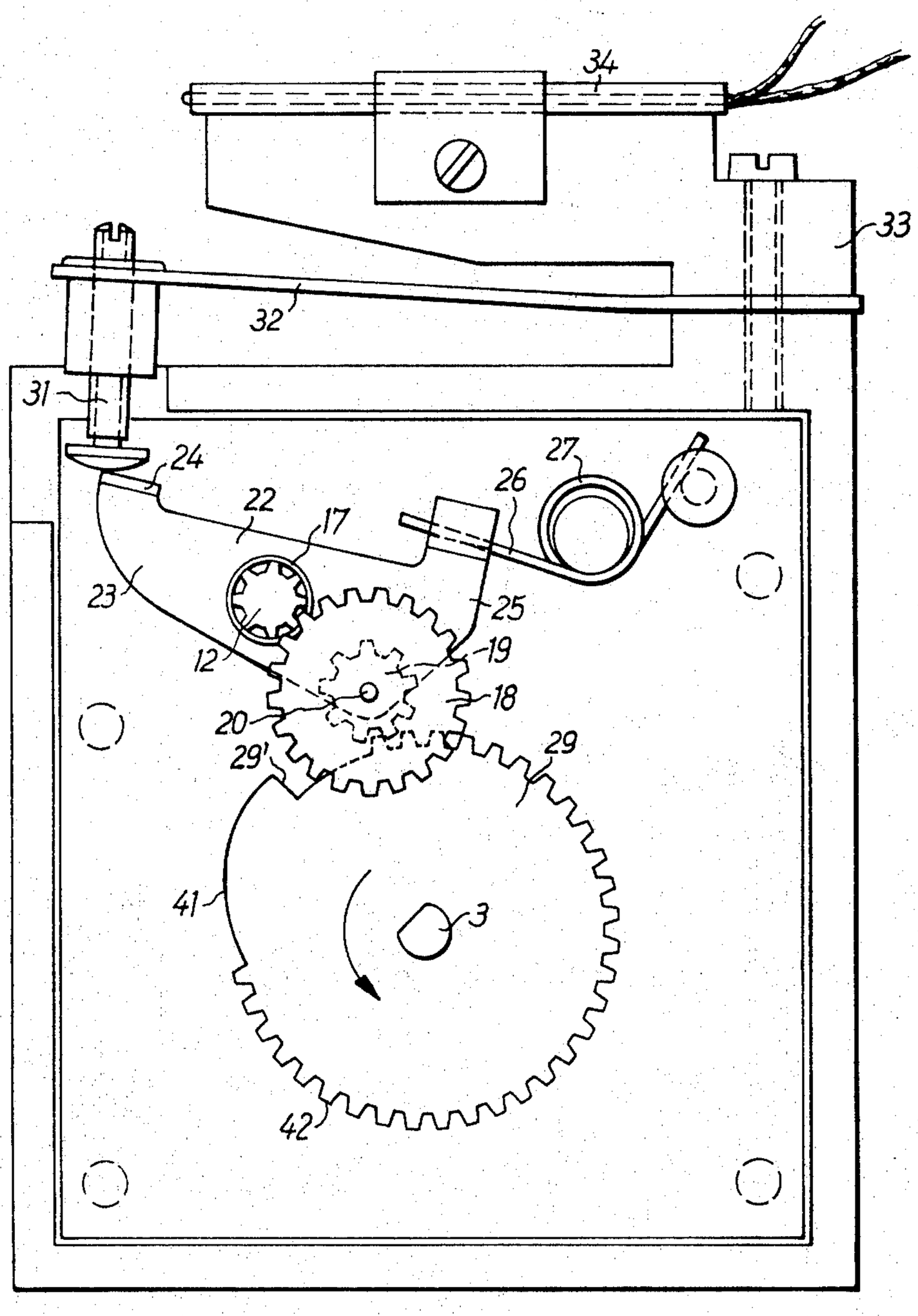

Fig.4

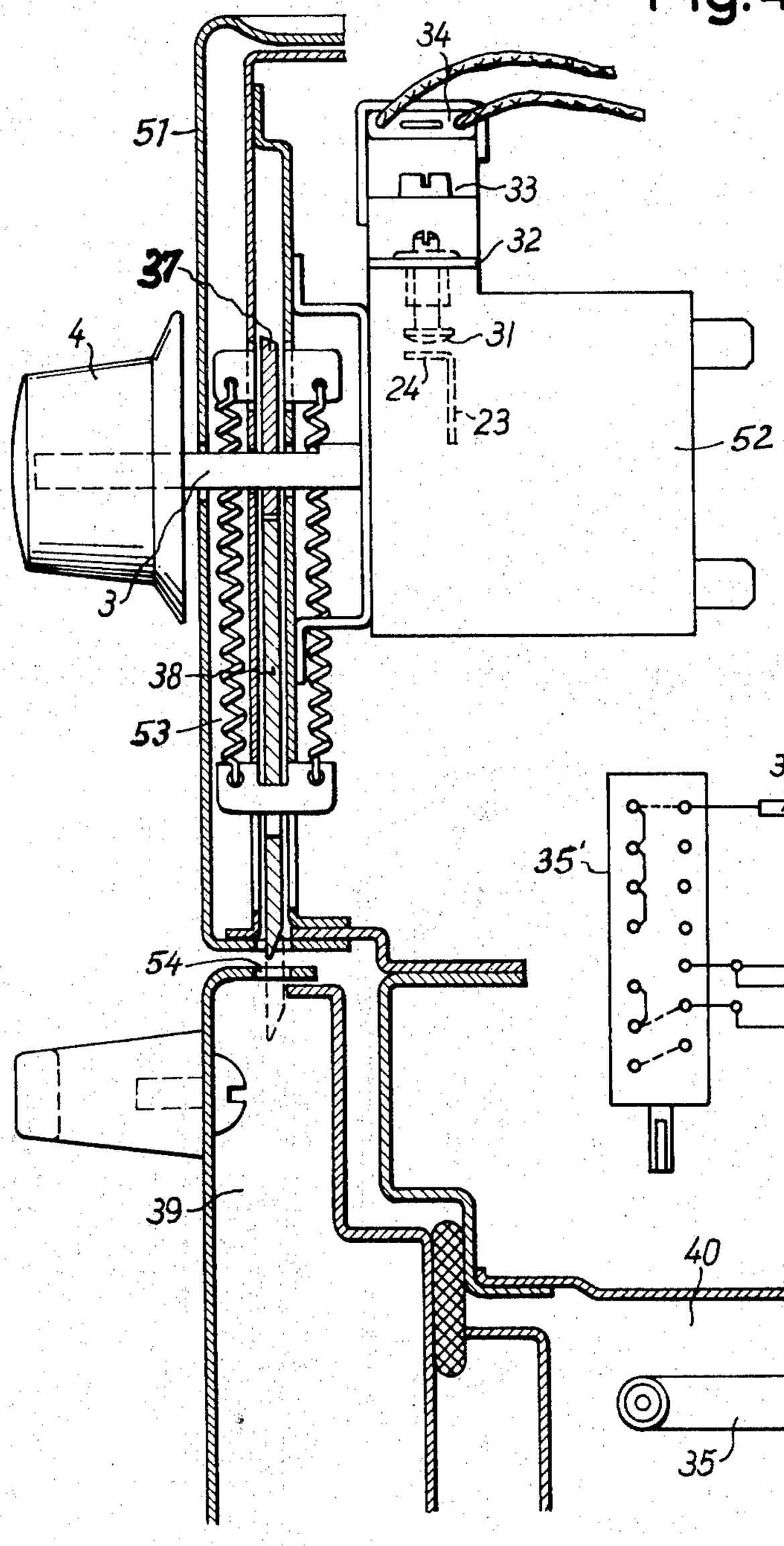

Fig.5

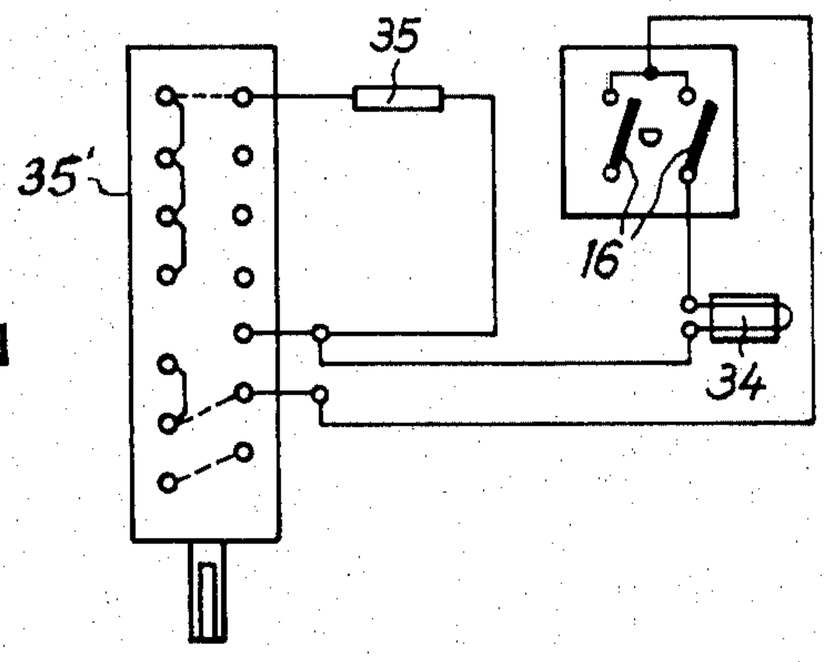

SELF-CLEANING OVEN

BACKGROUND OF THE INVENTION

The present invention relates to kitchen ranges, particularly ranges provided with devices for automatically cleaning the interior surfaces of the oven, such as disclosed in U.S. Pat. No. 3,625,197, issued to Priker et al. on Dec. 7, 1971.

The cleaning operation in such ranges is generally carried out by heating the oven to a relatively high temperature which is significantly above the normal operating temperature of the oven. It, therefore, is desirable, as a safety precaution, to maintain the oven door in a locked position during the cleaning process. A locking device is provided for locking the oven door during the cleaning operation and includes a locking element which is held under spring tension and which can be brought into its locking position relative to the oven door when the cleaning operation is initiated. Such apparatus is generally equipped with a timer which controls the cleaning operation and which works in cooperation with the locking device. A blocking device is also provided for holding the locking element in position during the cleaning operation.

In a kitchen range of this type the locking element is held in its locked position during the heat-cleaning process, after being inserted into the oven door, by means of a bimetal control device, so that the oven door cannot be opened. The timer switch used in this type of kitchen range is generally designed so that a friction coupling or similar device permits the winding knob, which is disposed inside the timer for winding the same to be turned in both directions. Such a bidirectional device is of particular advantage when the operation and manipulation of the timer on the kitchen range is being demonstrated. However, during the heat-cleaning process this device in the timer has the drawback that the time period set for a heat-cleaning process can be accidentally changed by turning forward the timer switch. This would result in a lengthening of the time period during which the oven is heated to the high cleaning temperature which could produce serious damage to the equipment.

SUMMARY OF THE INVENTION

An object of the present invention is to prevent any possible resetting of the timer during the cleaning period and thus an increase in the set time period for the heat-cleaning process.

This can be accomplished in accordance with the present invention by designing the timer switch itself as a blocking device for the locking element in such a way that the bimetal device causes a blocking of the timer switch against forward rotation when the temperature of the oven is within a defined range above a set value.

The advantages realized with the present invention are mainly that while the oven temperature is in this defined range, it is possible to securely lock the oven door as well as simultaneously prevent turning of the timer forward to its wound position.

BRIEF DESCRIPTION OF THE DRAWINGS

FIG. **1** is a cross sectional plan view of an oven timer provided with blocking elements in accordance with the present invention.

FIG. **2** is a front elevational view of a portion of the structure of FIG. **1**, with plate **30** and knob **4** removed, with the blocking elements in their rest position.

FIG. **3** is a view similar to that of FIG. **2** with the blocking elements in the operating position.

FIG. **4** is a cross-sectional side view of an oven locking system including the timer of FIG. **1** in operating connection with a locking device for the door of an oven according to the present invention.

FIG. **5** is a schematic circuit diagram of the heater control circuit for the embodiment of FIGS. **1–4.**

DESCRIPTION OF THE PREFERRED EMBODIMENTS

FIG. **1** shows in cross section a timer for controlling the self-cleaning operation of an oven. The timing mechanism together with the winding mechanism of the timer is disposed between two supporting plates **1** and **2** which are clamped together by means of screw bolts (not shown). An actuating shaft **3** which passes through the supporting plates **1** and **2** serves to wind the timer switch. Movement of a rotary knob **4** fastened on the actuating shaft **3** causes rotation of the shaft and thus winding of the timer. A toothed wheel **5** which is mounted on the actuating shaft **3** engages a driving gear **7** mounted on a shaft **6** which is supported by the two supporting plates **1** and **2.** Toothed wheel **5** drives the driving gear **7** when the actuating shaft **3** is rotated. One end of shaft **6** is mounted in supporting plate **1** in an elongated bearing hole **6′** and is biased towards the left side of the elongated bearing hole by means of a pressure spring **6″** which is fastened to supporting plate **1.** A toothed wheel **8** is mounted on shaft **6** to be rotatable relative thereto and is guided by friction disc springs **9,9′**. The association of the friction springs **9,9′** with the toothed wheel **8** to produce a clutch-type friction coupling results in the advantage that the toothed wheel **8** can be rotated, independent of the driving gear **7,** in a clockwise as well as a counterclockwise direction. The toothed wheel **8** guided by friction springs **9,9′** is arranged in engagement with a pinion **10,** mounted on a shaft **11** which is also mounted in supporting plates **1, 2.** The structure described thus far is identical with that shown in FIG. 14 of U.S. Pat. No. 3,625,197.

On the end of shaft **11,** which passes through the front supporting plate **2,** a further pinion **12** is disposed. Pinion **12** cooperates with a device which will be described below for blocking the actuating shaft **3** in the forward time setting direction.

A conventional clock spring **14** is mounted on the end portion **13** of the actuating shaft **3** which passes through supporting plate **1,** so that spring **14** is wound when the actuating shaft is rotated clockwise as shown by the arrow in FIG. **2.** Abutment discs **15** and **15′** provided with cams are also placed on the end portion **13** of the actuating shaft **3.** These abutment discs act on switching contacts **16** of a switching device for controlling the heating circuit as shown in FIG. **5.**

The pinion **12,** which is partially accommodated within a guide sleeve **17** mounted in supporting plate **2** and cooperates with a small toothed wheel **18** disposed in front of the supporting plate **2.** The toothed wheel **18** is connected to a driving pinion **19.** The driving pinion **19** is mounted on a bearing shaft **20,** the end of which is mounted in a two-armed rocker **22.** The two-armed rocker **22** is additionally pivotally mounted on the

guide sleeve **17** mounted in supporting plate **2.** Thus sleeve **17** is the stationary fulcrum for pivotal movement of rocker **22.**

As can be seen from FIGS. **2** and **3,** an upwardly facing abutment surface **24** is disposed on one arm **23** of the two-armed rocker **22.** A spring arm **26** of a two-armed spring **27** acts from above in a downward direction on the other arm **25** of rocker **22** which is opposite the abutment surface **24.** A bentover abutment flap **28** (FIG. **1**) is provided for enabling the engagement of the spring arm **26** with the rocker **22.**

The driving pinion **19** is in operative connection with an eccentric cam disc **29** having cam **29'**. A portion of the periphery of disc **29** is provided with teeth **42.** The cam disc **29** is also fastened to actuating shaft **3.** The eccentric cam disc **29** with the associated driving pinion **19** and toothed wheel **18,** as well as the two-armed rocker **22** with the associated two-armed spring **27,** form the device which cancels, or suppresses, the action of friction springs **9** and **9'** and prevents advancement of the rotary knob **4** and thus unauthorized resetting of the winding mechanism of the timer. A safety plate **30** (FIG. **1**) covers the front portion of the above-mentioned parts of this device on the side facing the rotary knob **4.** The safety plate **30** is connected to the supporting plate **2** while leaving a space **43** for installation of the above described blocking device.

The abutment surface **24** of rocker **22** is arranged to be operatively associated with a movable abutment pin **31.** Pin **31** which is mounted in the free end of a deflecting bimetal strip **32,** is designed to be adjustable in height to achieve proper operating alignment. The bimetal strip **32** is fastened to a block portion **33** having a large mass and made of a good heat conducting material. Strip **32** is connected therewith in a good heat conducting relationship. An electrical heating element **34** is associated with the block portion **33.** Elements **32,33** and **34** form a bimetal control unit which constitutes a structural unit with the timer. As shown in FIG. **5,** the heating element **34** is connected in series with the heating circuit of an oven heating mechanism **35,** which circuit is controlled by the switching contacts **16** of the timer. This arrangement assures that the heating element **34** whose operation will be described below, can receive a heating voltage only when the oven heating mechanism **35** has also been switched on. The oven heating element **35** is switched on by the oven switch **35'** which is connected to the electrical power line.

FIG. **4** provides a partial side view of the front section of the oven including the timer, the actuating mechanism and the locking device. When the actuating shaft **3** is rotated for the purpose of winding the clock spring **14** a locking slide member **38** which is normally biased upwards by spring **53,** is simultaneously actuated via an eccentric disc **37** fastened on actuating shaft **3.** This locking slide **38** is moved downwardly by the disc **37** and engages slot **54** of the door **39** of a partially shown oven **40** and locks the door during the heat cleaning period, (i.e., while the timer, which controls the sequence of the heat-cleaning process, runs down,) thus preventing the door from being opened during this period.

The operation of the timer **52** will now be explained in detail below. As can be seen in FIG. **2,** the driving pinion **19** rests on top of the cam **29'** of the eccentric cam disc **29** when the rotary knob **4** is in the zero time, or starting, position. At this time, the two-armed rocker **22** which cooperates with the toothed wheel **18** of the driving pinion **19** via pinion **12** is in an approximately horizontal position. The bimetal strip **32** which is initially unheated is in an extended position, where its free end is in its lowermost position.

By rotating the rotary knob **4** in a clockwise direction shown by the arrow in FIG. **2,** (to wind the clock spring **14**) the rear end of shaft **6** which until now has been pressed toward the left in the elongated bearing hole **6'** of supporting plate **1** by pressure spring **6''**, is now pivoted toward the right in the elongated bearing hole **6'** by the rotation of toothed wheel **5** thus removing toothed wheel **8** from engagement with the associated pinion **10.** As soon as the toothed wheel **8** is out of engagement with pinion **10,** the clock spring **14** can be easily wound.

The eccentric cam disc **29,** coupled with actuating shaft **3,** rotates in the direction shown by the arrow in FIG. **2.** Driving pinion **19** first moves without interference along the smooth running surface **41** following cam **29'**. With continued rotation of the eccentric cam disc **29,** the portion of the cam disc which has a slightly smaller diameter then lies opposites the driving pinion **19.** The driving pinion **19,** which is connected to the horizontally disposed rocker **22** and remains in its initial position, is spaced from the teeth **42** on the periphery of cam disc **29** and unable to engage therewith. The two-armed rocker **22,** which is biased by the compression force from the two-armed spring **27,** has the upward movement of its arm **23** limited by the abutment pin **31** of the extended bimetal strip **32.**

The rotary knob **4** of the winding mechanism of the timer can now be turned in the forward winding or backward resetting direction without interference because of the action of friction springs **9, 9'** since the backward movement of rotary knob **4** causes the toothed wheel **8** to slide between friction springs **9, 9'** and consequently rotation of the knob is not blocked. As long as the heating circuit which is controlled by the timer, and also the associated heating element **34** which heats the blocking part **33** are not connected at all with the current source, the clock spring **14** can be wound up as often and as completely as desired and also can be reset to zero again at any time by rotating the rotary knob **4** back to its starting position.

Once, however, the heating circuit of a device, for example an electric oven with a device for automatically heat-cleaning the oven, is connected with the current source, rotation of the rotary knob **4** will close the switching contacts **16** disposed in the heating circuit of the oven heating mechanism **35** through the cams on the abutment discs **15, 15'** as soon as a certain range of rotation has been traversed. Closing of the switching contacts **16** simultaneously applies voltage to the heating element **34** for heating the block portion **33.** This heating element **34** is connected in series with the oven heating mechanism **35** and with the switching contacts **16** and consequently is controlled in dependence upon the heat being applied in the oven. The block portion **33** is only slowly heated however due to its large mass so that the bimetallic strip **32** fastened to the block portion **33** will bend upwardly only after a certain period of time, as shown in FIG. **3.** The shift in the position of the bimetal strip causes the abutment pin **31** to be moved upwardly which relieves the restraint on arm **23.** The two-armed rocker **22** which is under compression pressure from the two-armed spring **27** and in whose

rocker arm **25** the toothed wheel **18** is mounted with the driving pinion **19,** can now be pivoted in such a way that the position of the driving pinion **19** is shifted so that the pinion **19** engages the teeth **42** of cam disc **29.** The pivoted driving pinion **19** is now coupled with the cam disc **29.** The resulting effect of this operation is the cancellation or bridging, of the force of the friction springs **9, 9'** on the driving gear **7** which is disposed on shaft **6** and cooperates with toothed wheel **5** of the actuating shaft **3.** After pivoting of driving pinion **19** and engagement with the teeth **42** of the cam disc **29,** there consequently no longer exists a possibility for manually rotating the rotary knob **4** for moving the actuating shaft **3** back into its starting position or in a direction against the winding operation of the clock spring **14.** The heat-cleaning process which is controlled by the timer therefore, can now take place without any outside interference.

When clock spring **14** has run down the abutment discs **15, 15'** open the switching contacts **16** disposed in the circuit for the oven heating mechanism **35.** The current circuit for the oven heating mechanism **35** as well as heating element **34** for heating blocking portion **33** is interrupted. Together with the running down of clock spring **14** the eccentric cam disc **29** simultaneously returns to its starting position which it has reached when clock spring **14** has completely run down and the driving pinion **19** again comes to rest on the cam **29'**. At that point the rocker **22** which is coupled with bearing shaft **20** is pivoted back into its horizontal position by cam **29'**.

Due to the fact that the block portion **33** is designed as a heat storage block, it is advantageously accomplished that even when the current is interrupted the rotary knob **4** still can not be turned back for a certain period of time since the bimetallic strip **32** is still being heated and consequently is bent upwardly Rocker **22,** therefore, positively remains in the pivoted position and the driving pinion **19** remains in engagement with teeth **42** of the eccentric cam disc **29.** If after a certain period of time, the blocking portion **33** has sufficiently cooled the bimetallic strip **32** returns to its horizontal starting position and thus allows the rocker to return to its horizontal position with its abutment pin **31,** mounted in the bent-out end, acting downwardly on the abutment surface **24** of the rocker arm **23** of rocker **22.** Thus the driving pinion **19** is removed from engagement with teeth **42** of the eccentric cam disc. If now the rotary knob **4** is turned back, the eccentric disc **37** mounted on the actuating shaft **3** is simultaneously turned back in addition to the cam disc **29** so that the locking slide **38** returns to its original position and releases the blocking of the oven door **39.** Now the oven **40,** which in the meantime has cooled down to a temperature which harbors no danger for the user can be safely opened.

It will be understood that the above description of the present invention is susceptible to various modifications, changes, and adaptations and the same are intended to be comprehended within the meaning and range of equivalents of the appended claims.

We claim:

1. For use in a kitchen oven equipped with apparatus for automatically heat-cleaning the interior surfaces of the oven, locking means for locking the oven door during the heat-cleaning process and having a locking member under spring tension and movable into a locking position, a locking control system comprising, in combination: timing means for controlling the operation of the heat-cleaning apparatus and arranged to be operatively connected with the locking member; blocking means connected to said timing means and arranged to be operatively connected with the locking member for holding the locking member in its locked position for a defined period of time; and bimetal control means connected for actuating said blocking means and for preventing said timing means from being reset while the temperature in the oven is above a defined value.

2. A device as defined in claim **1** further comprising an actuating shaft and means friction coupling said shaft to said timing means, and wherein said bimetal control means bridges said friction coupling means.

3. A device as defined in claim **1** wherein said bimetal control means includes an independent heating element and means for controlling said heating element in dependence upon the temperature of the oven.

4. A device as defined in claim **1** wherein said timing means and said bimetal control means form a structural unit.

* * * * *