United States Patent [19]

Owen

[11] **3,772,671**

[45] **Nov. 13, 1973**

[54] **FIRE ALARM**

[76] Inventor: **William D. Owen,** 578 W. Main St., Kahoka, Mo. 63445

[22] Filed: **May 22, 1972**

[21] Appl. No.: **255,820**

[52] **U.S. Cl.**..... **340/229,** 200/83 R, 337/401

[51] **Int. Cl.** **G08b 17/04**

[58] **Field of Search**..... 340/227, 227.1, 229; 337/401, 407, 409, 5; 116/114.5; 200/83 R, 83 J

[56] **References Cited**

UNITED STATES PATENTS

3,014,206	12/1961	Slavin	340/229
3,105,127	9/1963	Peters	200/83
3,147,735	9/1964	Landis	116/91
2,085,807	7/1937	Lindsey	340/332
2,781,769	2/1957	Reiter	337/407 X
1,620,062	3/1927	Bosshart	337/409
1,219,723	3/1917	Gracey	340/229
3,072,758	1/1963	Gribben	200/83
2,880,690	4/1959	Imburgia	116/91 X

Primary Examiner—Thomas B. Habecker
Assistant Examiner—Scott F. Partridge
Attorney—John N. Randolph

[57] **ABSTRACT**

A fire alarm system for buildings, especially dwellings, including a pressurized conduit extending through substantially all parts of a building and which includes fusible parts responsive to heat, such as that caused by a fire, for releasing the pressure from the conduit, to release a distended diaphragm which is connected to the conduit system. Release of the diaphragm permits movement of a detent rod, connected thereto, to a position for releasing a clock mechanism for mechanically producing an audible alarm. Release of the clock mechanism effects release of an electric switch which is spring biased to a circuit closing position for energizing electrical alarms which may constitute lights or audible alarms and which may additionally function as a visual indicator to indicate that the alarm has been inadvertently activated.

7 Claims, 6 Drawing Figures

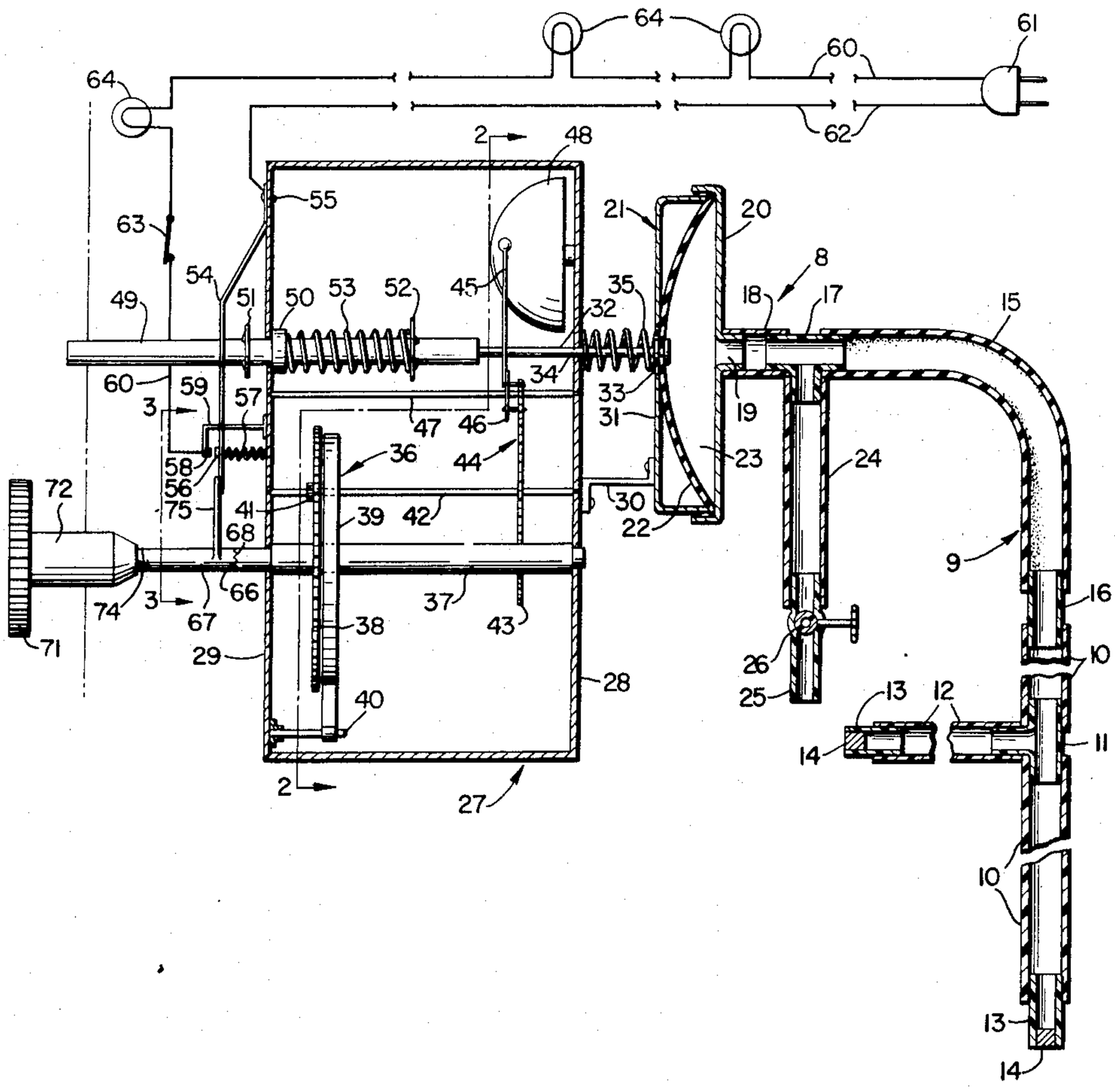

FIG. 1

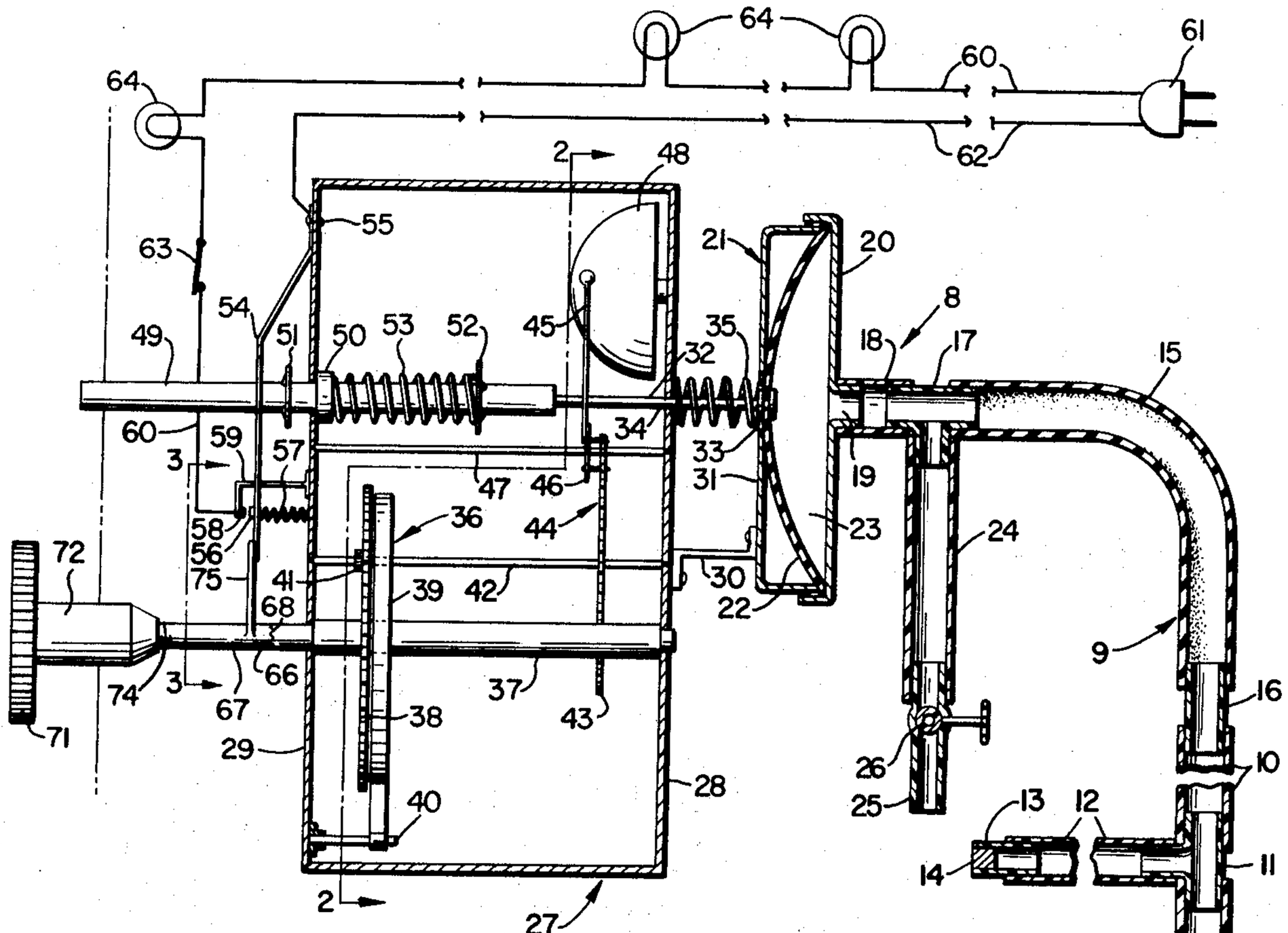

FIG. 2

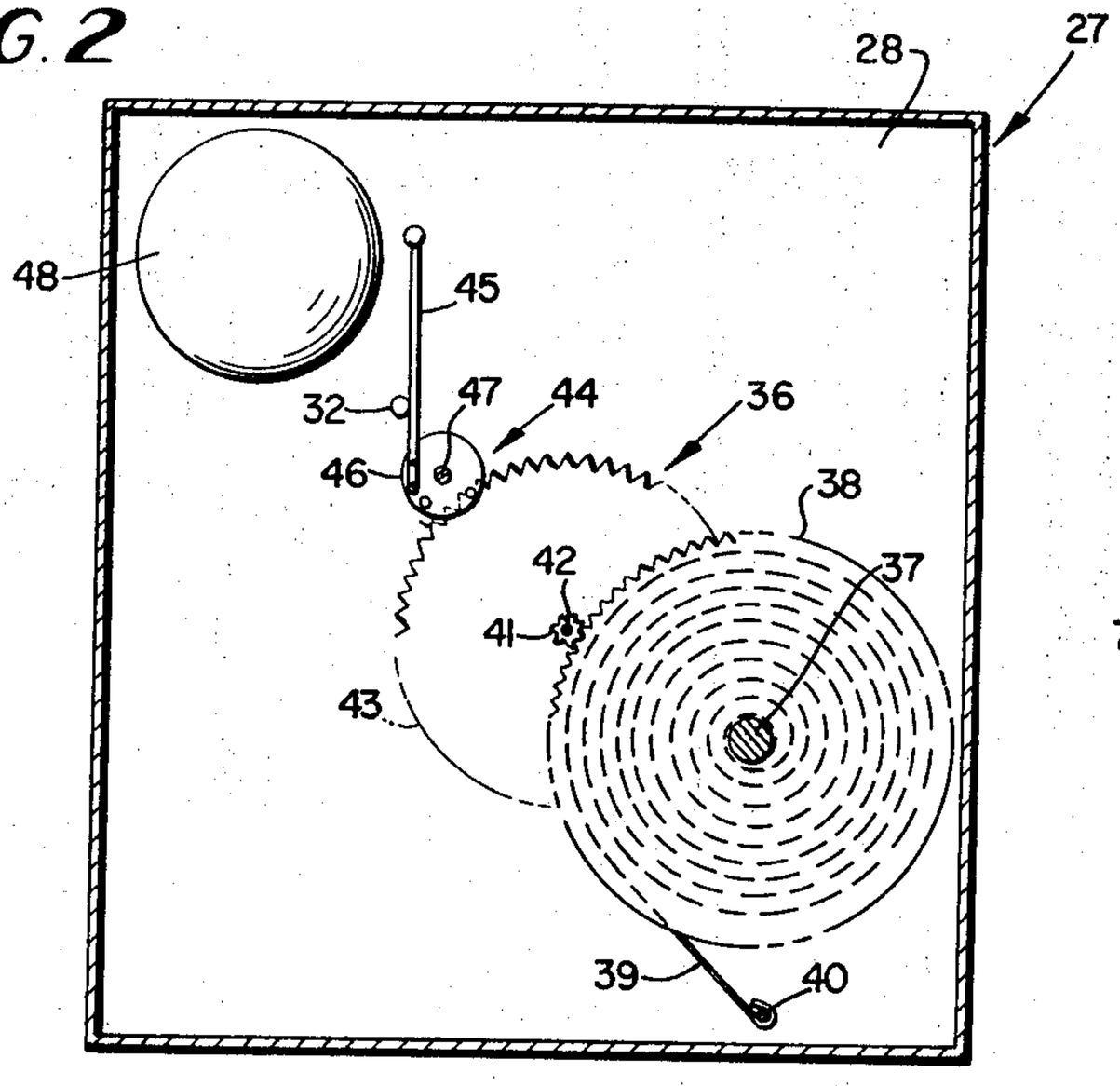

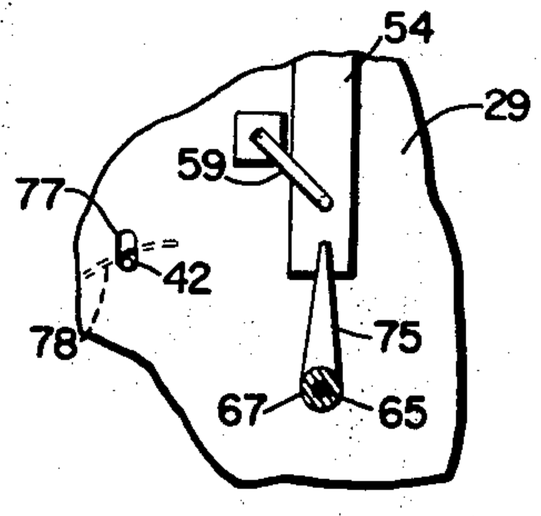



FIG. 3

FIG. 4

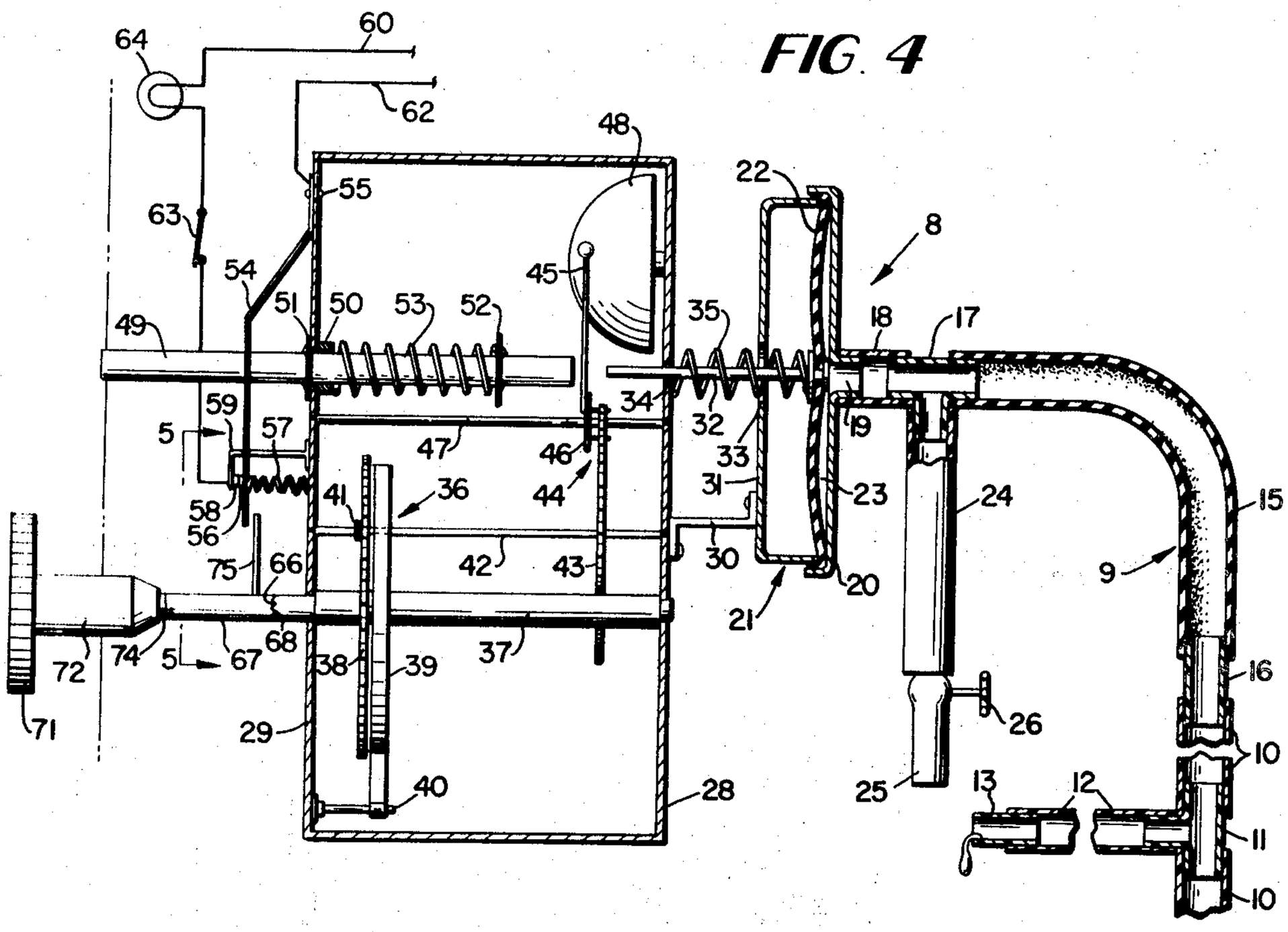

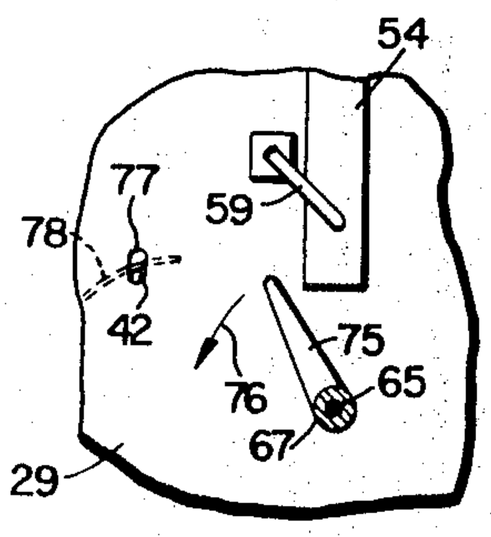

FIG. 5

FIG. 6

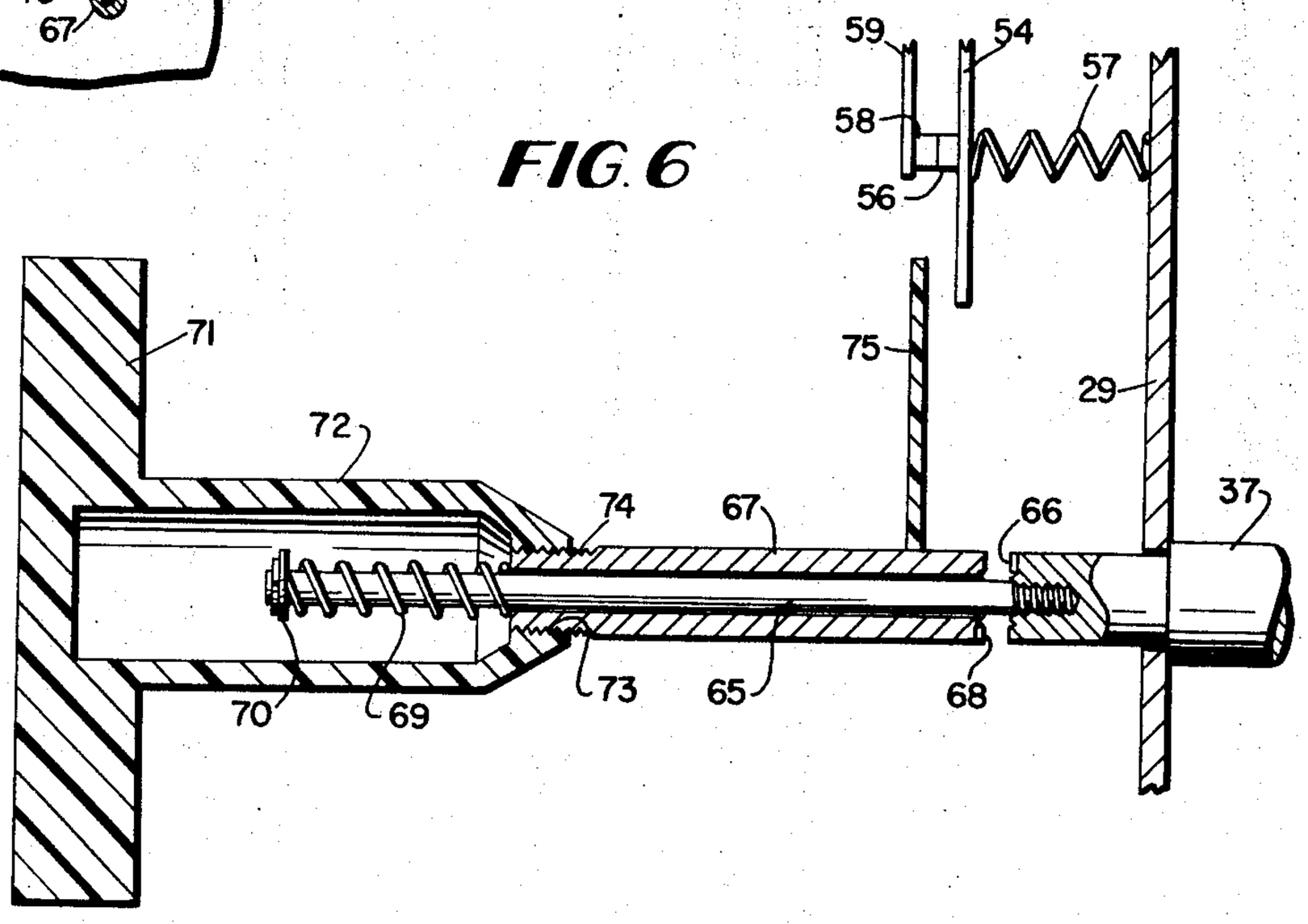

FIRE ALARM

SUMMARY

It is a primary object of the present invention to provide a fire alarm system capable of affording protection for an entire building, such as a home, for warning the occupants, should a fire occur in any part of the building, by means of both a visual and an audible alarm.

Another object of the invention is to provide such a system including means activated by the alarm for illuminating the building, in case of a fire, to assist the occupants in their escape.

Still a further object of the invention is to provide a fire alarm system which utilizes a part of a conventional alarm clock mechanism for mechanically producing an audible alarm in case of a fire.

Various other objects and advantages of the invention will hereinafter become more fully apparent from the following description of the drawings, illustrating a presently preferred embodiment thereof, and wherein:

BRIEF DESCRIPTION OF THE DRAWINGS

FIG. **1** is a fragmentary view, partly in elevation and partly in section, illustrating the complete fire alarm system;

FIG. **2** is a sectional view, taken substantially along the line **2—2** of FIG. **1**;

FIG. **3** is a fragmentary sectional view, taken substantially along a plane as indicated by the line **3—3** of FIG. **1**;

FIG. **4** is a fragmentary view, similar to FIG. **1**, but showing the parts in a released position;

FIG. **5** is a fragmentary sectional view taken substantially along a plane as indicated by the line **5—5** of FIG. **4**, and

FIG. **6** is an enlarged fragmentary sectional view, partly in elevation, showing another position of certain parts of FIGS. **1** and **4**.

DESCRIPTION OF THE PREFERRED EMBODIMENT

Referring more specifically to the drawing, the fire alarm system in its entirety is designated generally **8** and includes a conduit system, designated generally **9**, composed of a number of pipes **10**, preferably formed of plastic, connected together by T-joints **11**, to each of which is connected a branch pipe **12** having a tubular extension **13**, preferably formed of rubber or metal, which is closed and sealed by a plug **14** of a fusible material, such as candlewax or solder. Any number of the branches **12** may be provide, preferably one for each room of a building, such as a dwelling, in which the fire alarm system is mounted, and so that a tube **13** protrudes through the ceiling of each room, with other of the tubes being located at strategic points in the attic and basement.

The conduit system **9** includes a section **15** formed of rubber which is connected to an end one of the plastic pipes **10** by a short tube section **16.** The other end of the pipe **15** is connected by a T-joint **17** to the short length of plastic pipe **18** which connects with a nipple **19** of a detachable end wall **20** of a casing **21.** A diaphragm **22** is clamped across the casing **21** by the detachable wall **20** and combines therewith to form a chamber **23,** within the casing **21,** which communicates with the conduit system **9** through the nipple **19.**

A plastic branch pipe **24** connects with and leads from the T-coupling **17** and has a plastic extension **25** containing a manually operated valve **26.** One of the pipes **10,** located at the end of the conduit system **9,** remote from the casing **21,** terminates in an additional tube **13** closed by a fusible plug **14.**

The outer end of the tube **25** may be employed as a mouthpiece for pressurizing the conduit system **9** when the valve **26** has been turned from its closed position of FIG. **1** to an open position, for moving the diaphragm **22** to a distended position, as seen in FIG. **1,** from its released or relaxed position of FIG. **4.** If desired, tube **25** may be connected to an air pump, not shown.

A housing **27** has a front wall **28** and a rear wall **29.** A bracket **30** is secured to the outer side of the front wall **28** and to the outer side of a wall **31** of the casing **21,** which is located opposite to the wall **20,** for supporting the casing **21** in predetermined space relation to the housing wall **28.** A rod **32** has one end secured to the center of the diaphragm **22** and extends therefrom through an opening **33** of the wall **31** and slidably through an opening **34** of the wall **28.** The opening **33** is sufficiently large to accommodate an end portion of a compression spring **35** which bears against the diaphragm **22.** The opposite end of the spring **35** bears against the outer side of the wall **28,** around its opening **34,** for urging the rod **32** and diaphragm **22** to their positions of FIG. **4.**

A part of a mechanical alarm clock mechanism, designated generally **36,** is contained within the housing **27** and includes a shaft **37** having end portions journaled in walls **28** and **29.** A large gear **38** is fixed to the shaft **37.** The inner end of a main spring **39,** which is spirally wound around the shaft **37,** is fixed thereto, and the outer end of the spring **39** is anchored to a pin **40** which is secured to the wall **29.** The gear **38** meshes with a pinion **41** which is secured to a shaft **42** which is also journaled in the walls **28** and **29.** A toothed wheel **43,** forming a part of an escapement **44** is also fixed to the shaft **42.** A hammer **45** is fixed to and carried by a disc **46** of the escapement **44,** which is mounted to oscillate on a shaft **47,** which likewise extends between and is supported by the walls **28** and **29.** When the conduit system **9** is pressurized to maintain the diaphragm **22** in its distended position of FIG. **1,** the rod **32** extends across and bears against the hammer **45** to provide a detent to hold the hammer from swinging into and out of engagement with a bell or gong **48** which is mounted on the wall **28** within the housing **27.**

A rod **49** extends slidably through and is supported and guided by a boss **50** of the wall **29,** and has an inner end which abuts the end of the detent rod **32,** which is located in the housing **27,** when the diaphragm **22** is distended. The rod **49** is substantially larger in diameter than the rod **32** and has stops **51** and **52** secured thereto on opposite sides of the wall **29.** An expansion coiled spring **53** is mounted on the rod **49,** within the housing **27,** between the inner end of the boss **50** and the stop **52,** for urging the rod **49** from left to rights of FIGS. **1** and **4** and toward the rod **32.** The diaphragm **22,** when distended, is capable of holding the springs **35** and **53** compressed, as seen in FIG. **1,** so that the stop **51** is spaced from the wall **29** to visually indicate that the springs are compressed and that the conduit system **9** is pressurized.

A spring strip **54** has one end secured by a fastening **55** to the outer side of the wall **29** and has an opposite

free end which is outwardly offset from the wall **29** and which carries an electrical contact **56** which is spaced from the terminal of said free end. A weak compression spring **57** may be disposed between the wall **29** and a part of the free end portion of the spring strip **54** for urging said free end outwardly, so that the contact **56** will be spring biased into engagement with a stationary electrical contact **58** carried by a bracket which is supported by and extends outwardly from the wall **29,** as best seen in FIGS. **3** and **5.**

One end of an electric wire **60** connects with the contact **58** and the opposite end of the wire **60** is connected to an electric plug **61.** A second wire **62** leads from the plug **61** to the fastening **55** and is thus electrically connected to the spring strip **54** which provides an electrical conductor leading to the contact **56.** A conventional manual switch **63** and several light bulbs **64** are shown interposed in the wire **60,** in FIG. **1.**

Referring to FIG. **6,** a rod **65** has one end threadedly anchored in the end of the shaft **37** which protrudes from the wall **29.** Said shaft end is toothed as seen at **66** around the rod **65.** A sleeve **67** is slidably and rotatively mounted on the rod **65** and has a toothed inner end **68** which normally meshes with the teeth **66,** as seen in FIGS. **1** and **4.** A compression spring **69** is mounted on the opposite end of the rod **65** between the opposite end of the sleeve **67** and a detachable spring stop **70,** which is attached to said rod, for urging the sleeve **67** toward the shaft **37.** A knob **71** has a hollow shank **72** for accommodating the parts **69** and **70** and the rod end on which said parts are mounted. Said shank **72** has a restricted threaded bore **73** which detachably and threadedly engages an externally threaded end **74** of the sleeve **67.** An arm **75** extends laterally from the sleeve **67** and normally bears against the outer side of the free end of the spring strip **54,** as seen in FIGS. **1** and **3,** to maintain the strip **54** deflected inwardly to hold the contact **56** out of engagement with the contact **58.**

Assuming that the parts are in their positions of FIG. **1** with the switch **63** in a closed position and the switch **56,58** in an open position and with the plug **61** electrically connected to a conventional electrical outlet, not shown, the circuit including the switches and the lamp bulbs **64** will be maintained deenergized by the open switch **56,58.** Also, assuming that the clock mechanism **36** is wound and is held inoperative by the detent rod **32** bearing against the hammer **45** to prevent it from swinging toward the gong **48,** the fact that the alarm system **8** is thus properly set and ready for operation can be visually determined by observing that the switch **63** is closed, that the switch **56,58** is open and that the stop **51** is spaced from the wall **29.**

Should a fire occur in any part of the building equipped with the fire alarm **8,** one or more of the fusible plugs **14** or one or more of the pipes **10, 11, 16, 17** or **18** will melt sufficiently to allow air to escape from the conduit system **9,** thereby releasing the air pressure from the chamber **23** and allowing the spring **35** to move the diaphragm **22** and rod **32** from their positions of FIG. **1** to their positions of FIG. **4.** Movement of the rod **32** out of engagement with the hammer **45** releases the escapement **44** allowing the clock mechanism to unwind which includes rotation of the shaft **37** in a counterclockwise direction, as seen in FIG. **2,** and as indicated by the arrow **76** in FIG. **5.** As the clock mechanism is unwound, the escapement wheel is revolved for oscillating the escapement disc **46** and hammer **45.** The hammer **45** will strike the gong **48** each time that it swings counterclockwise, as seen in FIG. **2,** to thereby mechanically produce an audible alarm.

Furthermore, the sleeve **67** will revolve with the shaft **37,** so that as the shaft **37** commences to turn counterclockwise, the arm **75** will disengage the spring strip **54** so that the spring **57** will displace the free end of the strip **54** outwardly to move the contact **56** into engagement with the contact **58** for completing the electric circuit to energize the light bulbs **64.** These light bulbs in addition to providing visual alarms can be located so as to afford illumination for the occupants during their escape from the building. In addition, audible electric signals may be substituted for certain of the light bulbs **64** or added to the electric circuit. Further, the light bulbs **64** can be utilized to visually indicate that the system has been inadvertently actuated and therefore must be reset. One such indicator light may be wired into another circuit and constitute a light bulb which is frequently employed for other purposes so that should it burn out, this fact would be readily apparent.

In resetting the system **8,** the winding knob **71** is turned in a direction for turning the shaft **37** clockwise, as seen in FIG. **2,** until the clock mechanism **36** is fully wound. At such time, the arm **75** will be disposed inwardly with respect to the free end of the strip **54,** as seen in FIG. **4,** so that an outward pull must be exerted on the knob **71** to move the arm **75** to its position of FIG. **6,** after which it can be turned clockwise from its angular position of FIG. **5** to its position of FIG. **3.** The knob **71** is then released to allow the spring **69** to return the sleeve **67** to its position of FIG. **1.** During this movement, the arm **75** will contact the strip **54** and move it inwardly against the compression of the weaker spring **57** to move the contact **56** out of engagement with the contact **58** to open the electric circuit of FIG. **1.**

The detent rod **32** will move across one side or the other of the hammer as the conduit **9** is pressurized and the diaphragm **22** is distended back to its position of FIG. **1** from its position of FIG. **4.** During this movement, the rod **32** will engage the rod **49** and move said rod **49** back to its position of FIG. **1,** from its position of FIG. **4.**

As seen in FIGS. **3** and **5,** wall **29** has a vertical slot **77** in which one end of the shaft **42** is journaled. A spring **78** bears on said shaft end to normally hold it in the bottom of slot **77,** but to allow said shaft end to rise, so that the pinion **41** can disengage the gear **38** while the clock mechanism **36** is being rewound.

Two or more of the mechanical and electrical alarms may be incorporated into the conduit system **9,** so that should one alarm unit fail to function, operation of another unit will produce the mechanical audible alarm and the electrical visual and audible alarms.

The rubber pipe section **15** is sufficiently elastic to expand and contract and thereby compensate for temperature variations, so that too great a pressure will not be exerted on the diaphragm **22** in response to an unusually large increase in the ambient temperature.

Various other modifications and changes are contemplated and may be resorted to, without departing from the function or scope of the invention.

I claim as my invention:

1. A fire alarm system comprising a pressurized conduit system including a distended diaphragm, said con-

duit system having fusible parts for releasing the pressure from the system in response to heat, such as that caused by a fire, an alarm, an alarm actuating mechanism, a detent member carried by said diaphragm and maintained by the distended diaphragm in a position to prevent operation of the alarm actuating mechanism, said detent being movable with the diaphragm to a position to release the alarm mechanism for actuation when the conduit system is depressurized, a compression spring moving the diaphragm and detent to a position for releasing the alarm actuating mechanism, said alarm actuating mechanism comprising a part of a mechanical clock mechanism including a rotatable shaft, an electric circuit having an electrical alarm interposed therein and including an electric switch, said switch including a contact normally spring biased to a circuit closing position, and an arm carried by said shaft for holding said contact in a circuit breaking position until said detent member is moved to a released position permitting rotation of the shaft.

2. A fire alarm system as in claim **1,** said mechanical clock mechanism including an oscillating escapement member, a hammer carried thereby, and a gong disposed to be sounded by engagement of the hammer therewith when the detent member is moved out of engagement with the hammer to release the clock mechanism.

3. A fire alarm system as in claim **1,** said electrical alarm including visual alarms so located as to provide illumination for the escape of occupants of a building in case of a fire.

4. A fire alarm system as in claim **1,** at least one of said electrical alarms comprising a visual alarm disposed to additionally function as a warning light to indicate when the alarm actuating mechanism has been inadvertently released.

5. A fire alarm system as in claim **1,** and means for visually indicating when the conduit system is fully pressurized and the diaphragm is fully distended.

6. A fire alarm system as in claim **1,** said conduit system including an elastic section capable of expanding and contracting to compensate for temperature variations.

7. A fire alarm system as in claim **1,** said fusible parts comprising plugs located in different parts of a building containing the fire alarm system.

* * * * *