United States Patent [19]

Swithenbank et al.

[11] **3,772,670**

[45] **Nov. 13, 1973**

[54] **DETECTION OF FLAMES AT BURNERS**

[75] Inventors: **Joshua Swithenbank; David Shaw Taylor,** both of Sheffield, England

[73] Assignee: **Land Pyrometers Limited**

[22] Filed: **Apr. 27, 1971**

[21] Appl. No.: **137,804**

[30] **Foreign Application Priority Data**

May 6, 1970 Great Britain 21,761/70

[52] **U.S. Cl.**..... **340/228.2,** 137/65, 340/419,

[51] **Int. Cl.** **G08b 17/12**

[58] **Field of Search**..... 340/228.1, 228.2, 340/239 R; 328/6; 137/65, 66

[56] **References Cited**

UNITED STATES PATENTS

3,233,650	2/1966	Cleall	340/228.2 X
3,392,580	7/1968	Bain et al.	340/239 R X
3,370,284	2/1968	Bagno	340/258 B

Primary Examiner—David L. Trafton
Attorney—Lowe and King

[57] **ABSTRACT**

The detection of a flame at a burner is effected by applying determined fluctuations to the flow of at least one reactant to the burner, detecting radiation from the flame from the burner, correlating the fluctuations in the radiation with the applied fluctuations, and utilising the correlated fluctuations in the detected radiation to control a safety device.

11 Claims, 3 Drawing Figures

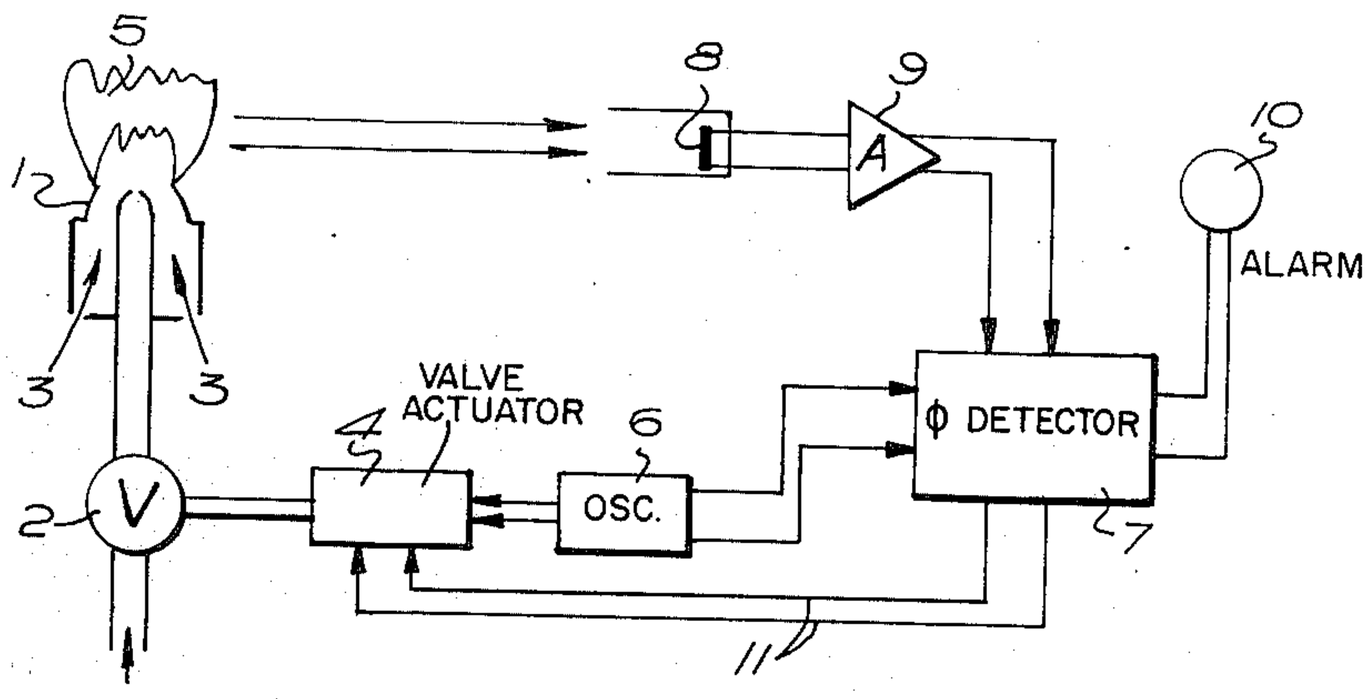

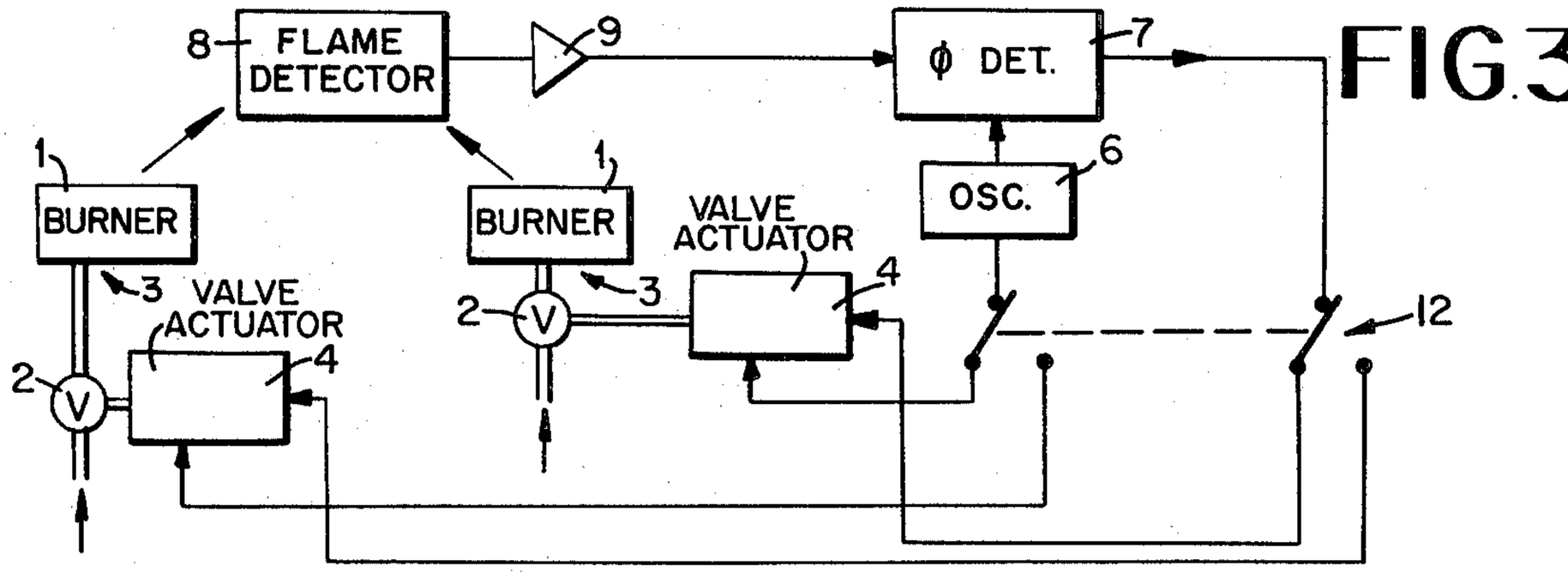

FIG.3

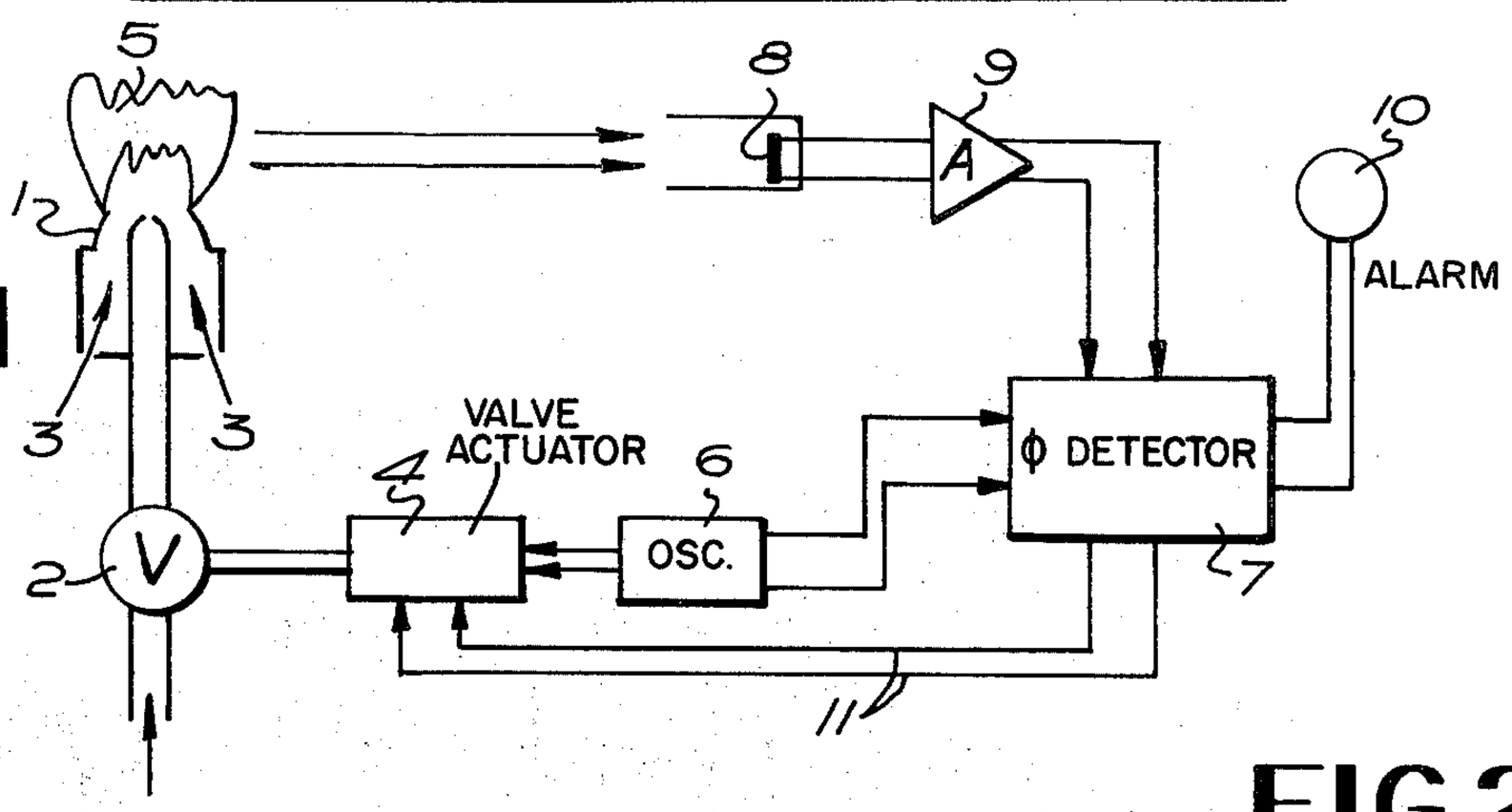

FIG.1

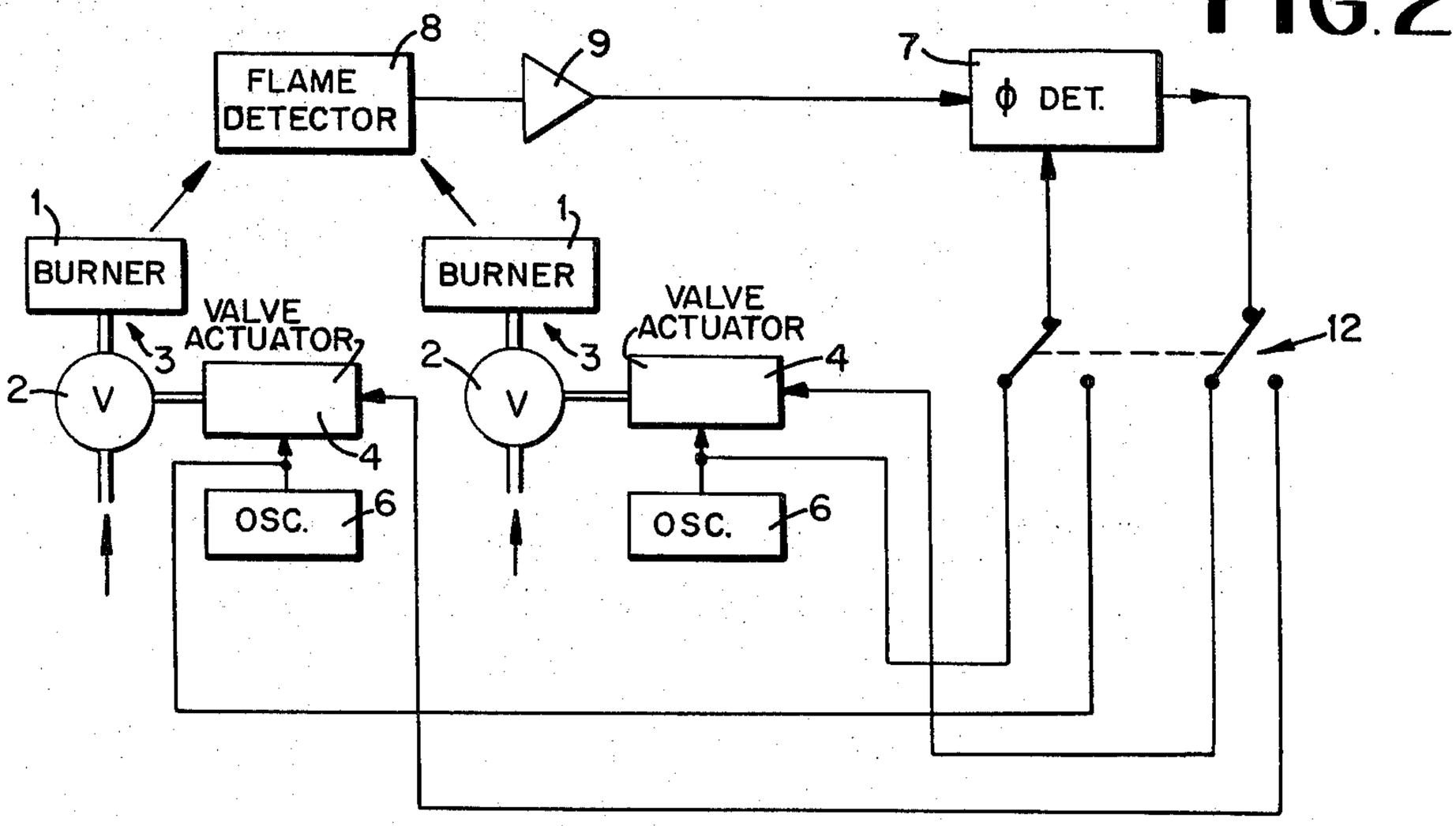

FIG.2

INVENTORS.
JOSHUA SWITHENBANK
DAVID SHAW TAYLOR
BY Lowe & Kuig
ATTORNEYS

DETECTION OF FLAMES AT BURNERS

This invention relates to the detection of flames at burners, more particularly for the detection of failure of any one or more burners in an installation utilising a number of burners, but equally applicable to detection of failure of a single burner, because the extinction of the only flame may be difficult to detect by conventional means for some time after extinction has occurred.

Detection means for the flame of a burner are known comprising at least one valve for controlling the general level of flow of at least one reactant to the burner, a variator for applying to the flow determined fluctuations of small amplitude and low frequency compared with the natural frequency of flame flicker, a detector for radiation from the flame at the burner and for emitting a signal corresponding to the radiation, a comparator for detecting the presence of fluctuations in the radiation which correlate with the applied fluctuations, and at least one safety device actuated if no such fluctuations exist in the detected radiation.

However, even in the absence of a flame at the burner, stray radiation (e.g., from hot furnace walls) may have a frequency or frequencies such as to cause the detector to emit a signal in which the comparator can detect the presence of fluctuations corresponding to the fluctuations applied to the flow to the burner.

The object of the invention is to overcome this difficulty and ensure that the comparator cannot respond to other than a signal resulting from detection of radiation from a flame at the burner.

According to the present invention, detection means for a flame at a burner comprises at least one valve for controlling the general level of flow of at least one reactant to the burner, a variator for applying to the flow periodic fluctuations of small amplitude and low frequency compared with the natural frequency of flame flicker, a detector for radiation from the flame at the burner and for emitting a signal corresponding to the radiation, phase-sensitive detector means for comparing fluctuations in the signal corresponding to the radiation with the applied fluctuations, and at least one safety device actuated if the phase-sensitive detector means cannot detect any correlation between the fluctuations.

The phase-sensitive detector means is responsive to fluctuations in the signal which are in-phase or anti-phase. As stray radiation usually has no fluctuation or else has no fluctuation with a frequency similar for any appreciable period to that of the applied fluctuation, the detection means can respond only to radiation from a flame at the burner or, in the absence of a flame, actuate the safety device.

The or each valve may be provided with an electrical actuator connected to the valve member for setting the general level of flow, and the variator may be an electrical (or electronic) oscillator the input frequency of which is compared with the frequency of the detected signal. Alternatively, the or each valve may be provided with a mechanical, or a hydraulic or pneumatic, actuator, the variator being a corresponding vibrator, and a transducer being provided to produce from the vibrator an input signal from the phase-sensitive detector to compare with the output signal from the radiation detector. Again, the variator may be the valve member controlling the flow to which the fluctuations are to be

applied (or a component associated therewith), the valve member having a natural frequency under conditions of gas flow, a transducer being provided to produce from the valve member an input signal for the phase-sensitive detector to compare with the output signal from the radiation detector.

The safety device may be an alarm, audible and/or visible, and/or it may comprise an overriding control for the or each valve arranged to close the valve completely in the event of failure of the burner. Thus the overriding control may be applied by the phase-sensitive detector to an actuator for the valve member of the or each valve concerned.

For an installation utilising a number of burners, individual valves are provided for controlling the general level of flow of reactant to the burners, and individual variators are provided for applying fluctuation to the flows to the different burners, sufficient differences being provided between the fluctuations applied to each (e.g., non-harmonically related frequencies) to enable the phase-sensitive detector to differentiate between the separate fluctuations, and individual detectors may be provided for the different burners, or a single detector may serve for all the burners by switching the phase-sensitive detector sequentially to check for a flame at each burner in turn. Alternatively, a single detector may serve for all the burners by applying the fluctuations to one burner at a time.

Flame detection means according to the invention may be adapted for control of the combustion conditions of one or more burners, as is described in copending Application Ser. No. 137,864, filed Apr. 27, 1971 especially if both reactants are controlled by valves, but also in the case where the flow of fuel induces a flow of air to the burner or the burners.

The radiation detected may be the electromagnetic radiation emitted by the flame in the ultra violet, visible or infra-red region of the spectrum, or any other radiation from the flame which exhibits variations in magnitude which bear a positive relation to the combustion intensity of the flame and which is capable of translation into an electrical effect by a suitable detector.

The invention will now be described further with reference to the accompanying drawing, which shows, by way of example only, in diagrammatic form, in FIG. 1 an arrangement for one burner only, and in FIGS. 2 and 3 arrangements as to how the principles of the invention can be used with multi-burner installations.

In FIG. 1, the flow of gaseous fuel to a burner 1 is controlled by a valve 2, the flow of fuel inducing a flow 3 of air to the burner, and the position of the valve member (not visible) of the valve 2 is set and adjusted by an actuator 4, the mean position being set to give the flow necessary for the desired size of flame 5. Periodic fluctuations are applied to the valve member of the valve 2 through the actuator 4 by an oscillator 6 the input frequency of which is compared by a phase-sensitive detector 7 with the frequency of a signal from a radiation detector 8 and amplified by an amplifier 9. If the signal does not produce the required correlation with the applied fluctuations (because of absence of the flame 5 and, therefore, absence of radiation) the phase-sensitive detector 7 operates an alarm 10, which may be audible and/or visual, and exerts an overriding control 11 on the actuator 4 to close the valve 2 completely.

For a multi-burner system monitored by basically the same arrangement, as illustrated in FIG. 2 each of a plurality of burners is provided with a separate valve 2, air supply, valve actuator 4, flame, and oscillator 6 and the oscillator and valve actuator for each burner are oscillator and valve actuation for each burner are connected to the phase-sensitive detector 7 through a multi-pole switch 12, whereby sequential switching to each burner arrangement is effected in turn, the one detector 8 serving for all the burners by arranging that the frequencies of the fluctuations applied by the respective oscillators 6 are non-harmonically related. Alternatively, as illustrated in FIG. 3 the fluctuations are applied to one burner at a time by sequentially connecting a single oscillator 6 to actuators 4 through one pole of switch 12 in synchronism with another pole of switch 12 connecting the output of detector 7 to actuators 4 so that the detector 8 can create only one signal for correlation with the applied fluctuations. Yet again, individual detectors may be provided for the different burners and sufficient differences provided between the frequencies of the fluctuations applied by the respective oscillators for the phase-sensitive detector to be able to differentiate between the fluctuations of the radiation from the flames at the different burners.

What we claim is:

1. Detection means for a flame at a burner comprising at least one valve for controlling the general level of flow of at least one reactant to the burner, a variator for applying to the flow periodic fluctuations of small amplitude and low frequency compared with the natural frequency of flame flicker, a detector responsive to radiation from the flame at the burner for deriving a signal corresponding to the radiation, phase-sensitive detector means for comparing phase fluctuations between the signal corresponding to the radiation and the applied fluctuations, and at least one safety device actuated in response to the phase-sensitive detector means failing to detect any correlation between the fluctuations.

2. Flame detection means as in claim 1, wherein the valve is provided with an electrical actuator connected to the valve member for setting the general level of flow and the variator includes electrical oscillator means for deriving said low frequency, said phase-sensitive detector means being responsive to a correlation between the low frequency derived by the oscillator and the detected signal.

3. Flame detection means as in claim 1 wherein the valve is provided with a mechanical actuator connected to the valve member for setting the general level of flow, and the variator is a corresponding vibrator, a transducer responsive to motion of the vibrator being provided for deriving an input signal for the phase-sensitive detector means to phase compare with the output signal from the radiation detector.

4. Flame detection means as in claim 1, wherein the variator is a valve member controlling the flow to which the fluctuations are to be applied, the valve member having a natural frequency under conditions of gas flow, and a transducer responsive to motion of the valve member is provided for deriving an input signal for the phase-sensitive detector means to phase compare with the output signal from the radiation detector.

5. Flame detection means as in claim 1 wherein the safety device includes an audible alarm.

6. Flame detection means as in claim 1 wherein the safety device includes a visible alarm.

7. Flame detection means as in claim 1, wherein the safety device comprises an overriding control for closing the valve completely in response to the phase-sensitive detector means failing to detect any correlation between the fluctuations.

8. Flame detection means as in claim 7, wherein the overriding control includes an actuator for the valve, said actuator being responsive to the phase-sensitive detector means.

9. Flame detection means as in claim 1 wherein a plurality of burners are provided, an individual valve for each burner controlling the general level of flow reactant to the burners, an individual variator for applying fluctuations to valve members of each different valve, said variators being arranged so that sufficient differences are provided for the fluctuations applied to each valve member to enable the phase-sensitive detector means to differentiate between the separate fluctuations, and an indivudal radiation detector responsive to radiation from the flame of the different burners.

10. Flame detection means as in claim 1 wherein a plurality of burners are provided, an individual valve for each burner controlling the general level of flow reactant to the burners, an indivudal variator for applying fluctuations to valve members of each different valve, said variators being arranged so that sufficient differences are provided for the fluctuations applied to each valve member to enable the phase-sensitive detector means to differentiate between the separate fluctuations, a single detector responsive to radiation from the flame of all the burners, and means for switching the phase-sensitive detector means to be sequentially responsive to a replica of the fluctuations applied to the different valve means.

11. Flame detection means as in claim 1 wherein a plurality of burners are provided, an individual valve for each burner controlling the general level of flow reactant to the burners, an individual variator for applying fluctuations to valve members of each different valve, a single detector responsive to radiation from the flame of all the burners, and means for switching the variator to be sequentially connected to the valve members so that fluctuations are applied to one burner at a time.

* * * * *