United States Patent [19]

Smith

[11] **3,772,668**

[45] **Nov. 13, 1973**

[54] **FREIGHT SECURITY SYSTEM**

[75] Inventor: **William Van Smith,** Memphis, Tenn.

[73] Assignee: **Lectrolarm Custom Systems, Inc.,** Memphis, Tenn.

[22] Filed: **Dec. 29, 1971**

[21] Appl. No.: **213,703**

[52] **U.S. Cl.**..... **340/224,** 325/8, 340/38 R, 340/152 T, 340/171 PF, 340/258 R, 340/312, 343/6.5 SS

[51] **Int. Cl.**..... **G01s 1/02**

[58] **Field of Search** ..... 340/152 T, 38 R, 340/38 L, 224, 309.1, 152 T, 171 PF; 343/6.5 SS; 325/8

[56] **References Cited**

UNITED STATES PATENTS

3,581,283	5/1971	Reddel et al.	340/171 PF
3,705,385	12/1972	Batz	325/8 X
3,293,642	12/1966	Gieles	343/6.5 SS
3,060,406	10/1962	Wright	340/38 R X
2,979,706	4/1961	Simon et al.	340/224
3,054,100	9/1962	Jones	343/6.5 SS

Primary Examiner—David L. Trafton
Attorney—John R. Walker, III

[57] **ABSTRACT**

An electronic security system for safe-guarding freight against theft while in transit and/or while sitting at a dock site. The concept of the system is to plant a unique transceiver in the freight package which responds with a coded signal when properly interrogated, i. e., with a coded radio frequency. The system includes a second transceiver, which is monitored by security personnel, and which is positioned at a strategic location. The monitored transceiver may be automatically triggered each time a conveyance means, e. g., a truck or the like, passes a particular point or it may be triggered manually. Triggering the monitored transceiver causes the transmitted carrier frequency to be modulated with a first coded audio signal. The planted transceiver responds with a second coded signal, if the first signal was of the proper frequency. The monitored transceiver includes a plurality of decoding networks and a plurality of neon lights which respectively respond to signals accepted by the decoding networks. Each light and associated decoding network monitors a separate freight package for purposes of alerting the security personnel when unauthorized movement of the freight package is occurring. The system has the capability of simultaneously safeguarding numerous packages, e. g., 50 or more, positioned at one location. Additionally, the system is capable of discriminating or pinpointing the particular conveyance means that is carrying the freight package.

3 Claims, 4 Drawing Figures

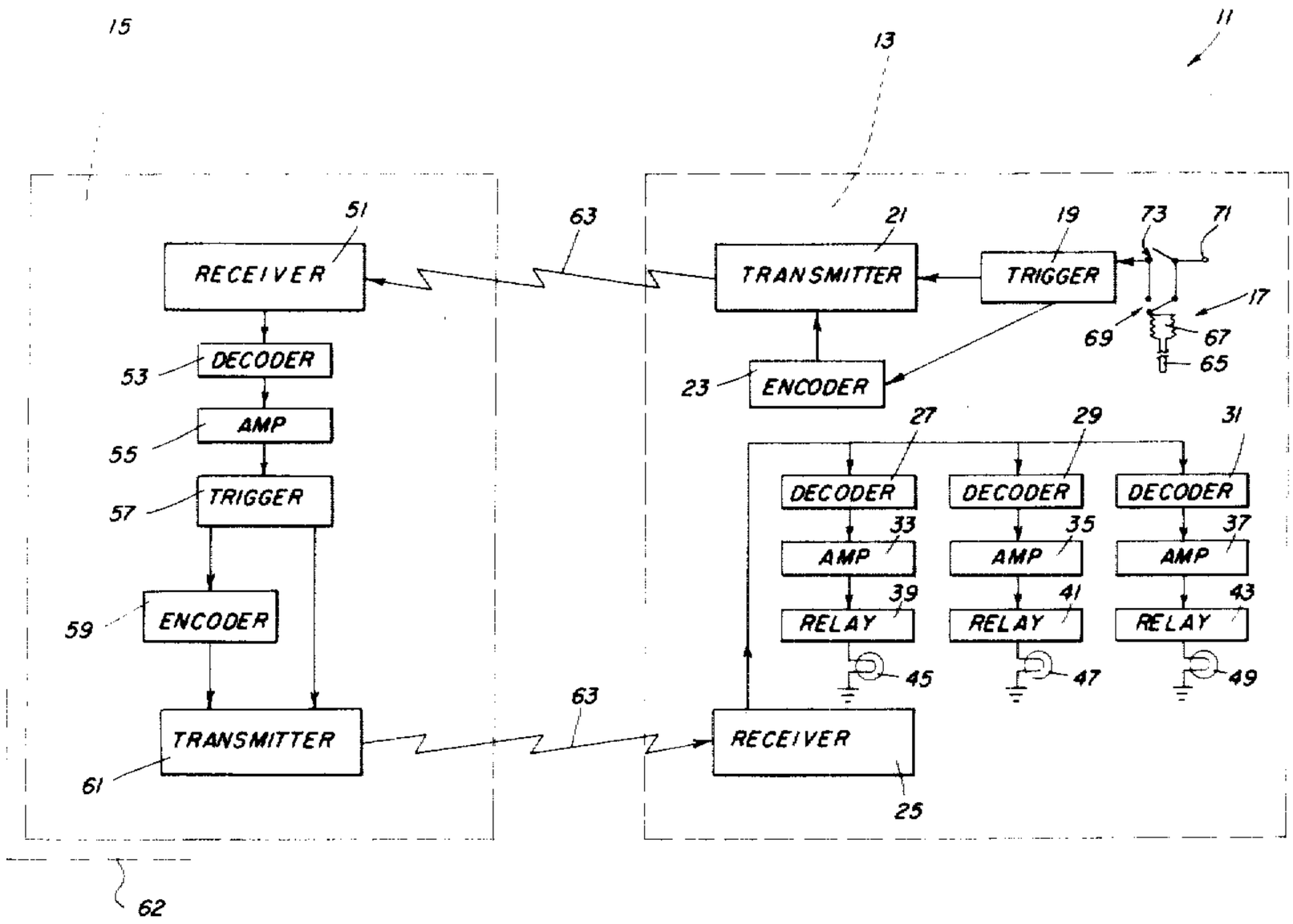

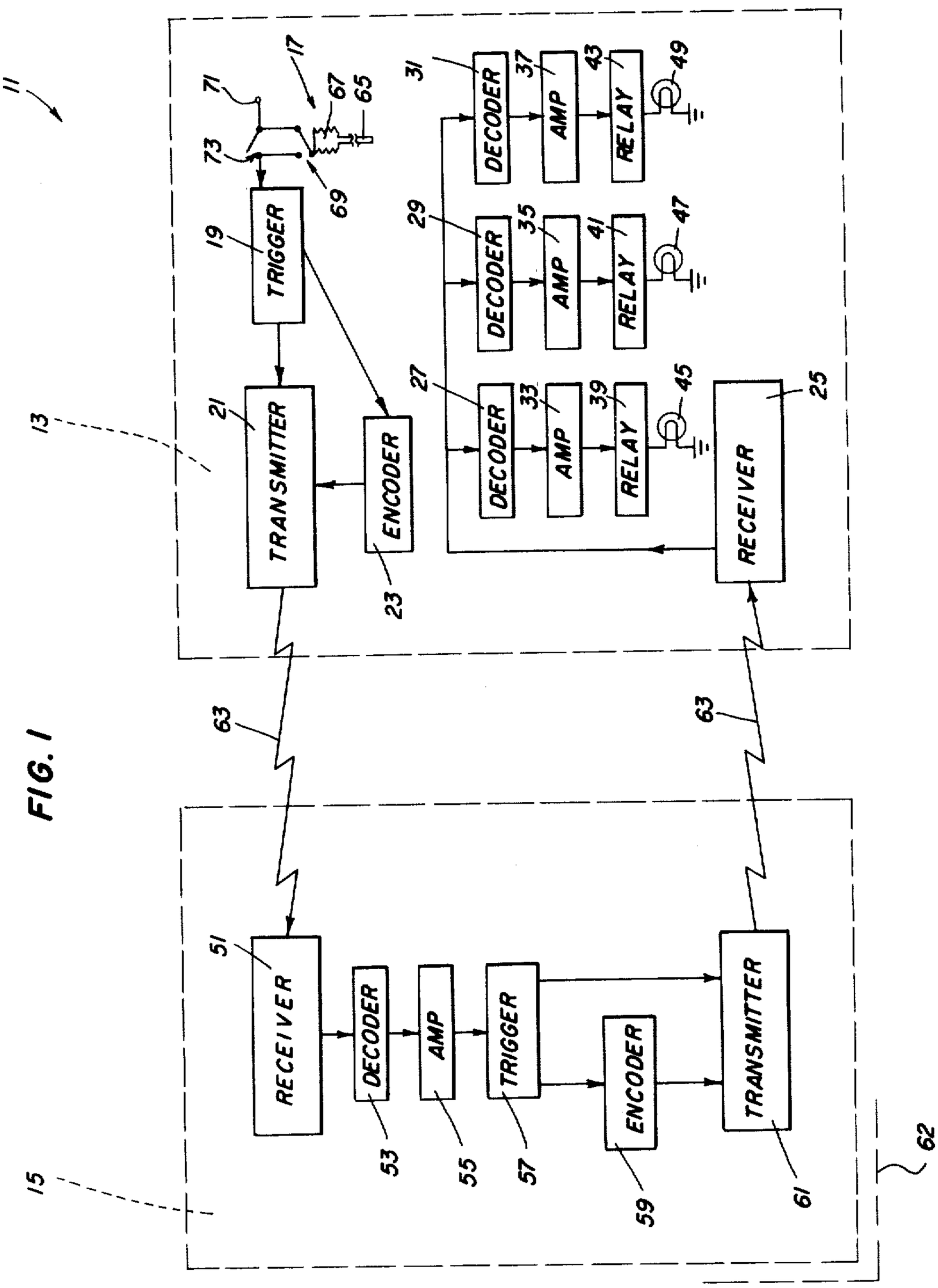

FIG. 1

INVENTOR.
WILLIAM V. SMITH
BY John R. Walker, III
attorney

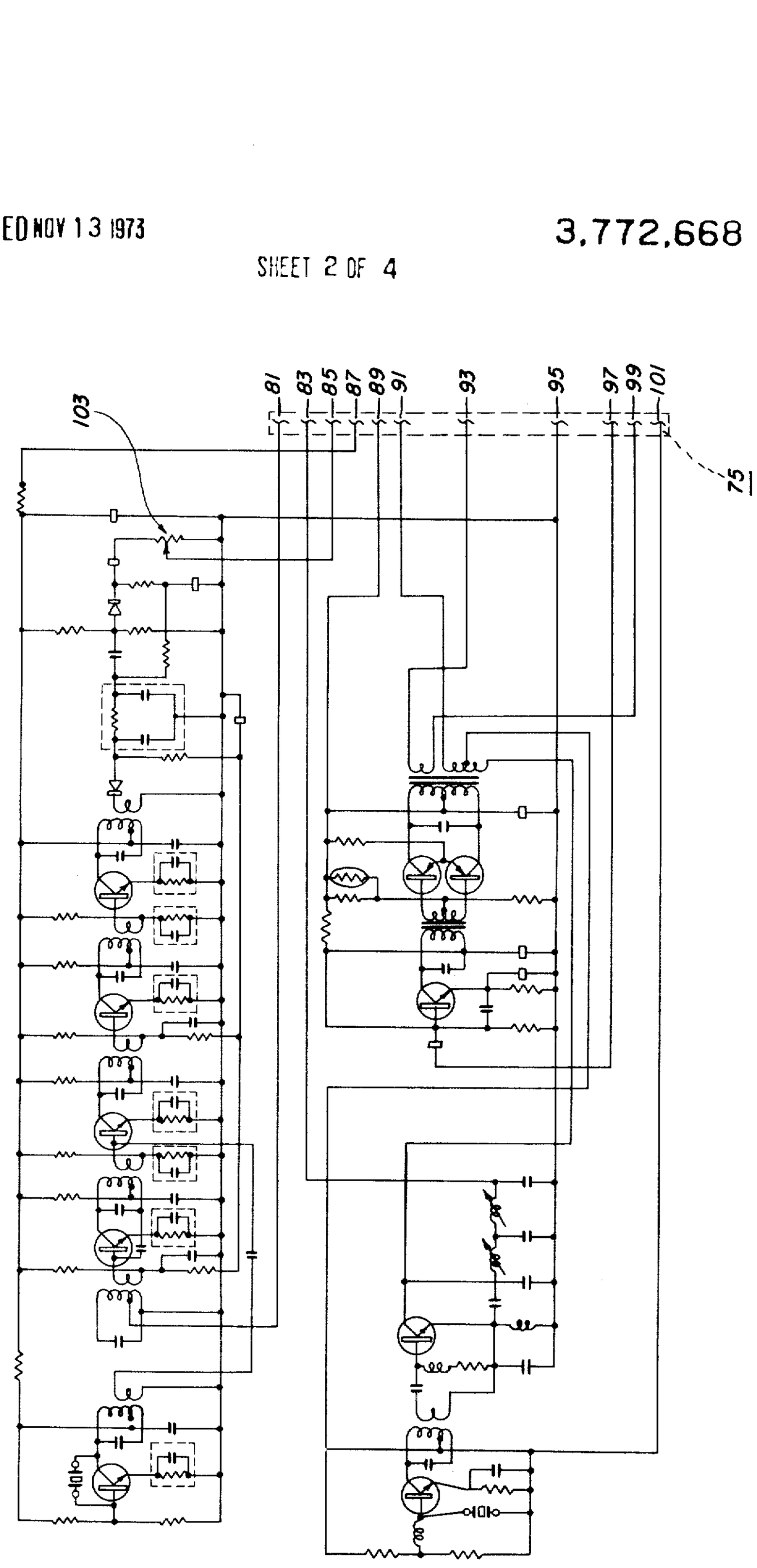

FIG. 2

INVENTOR.
WILLIAM V. SMITH
BY John R. Walker, III
Attorney

FIG. 3

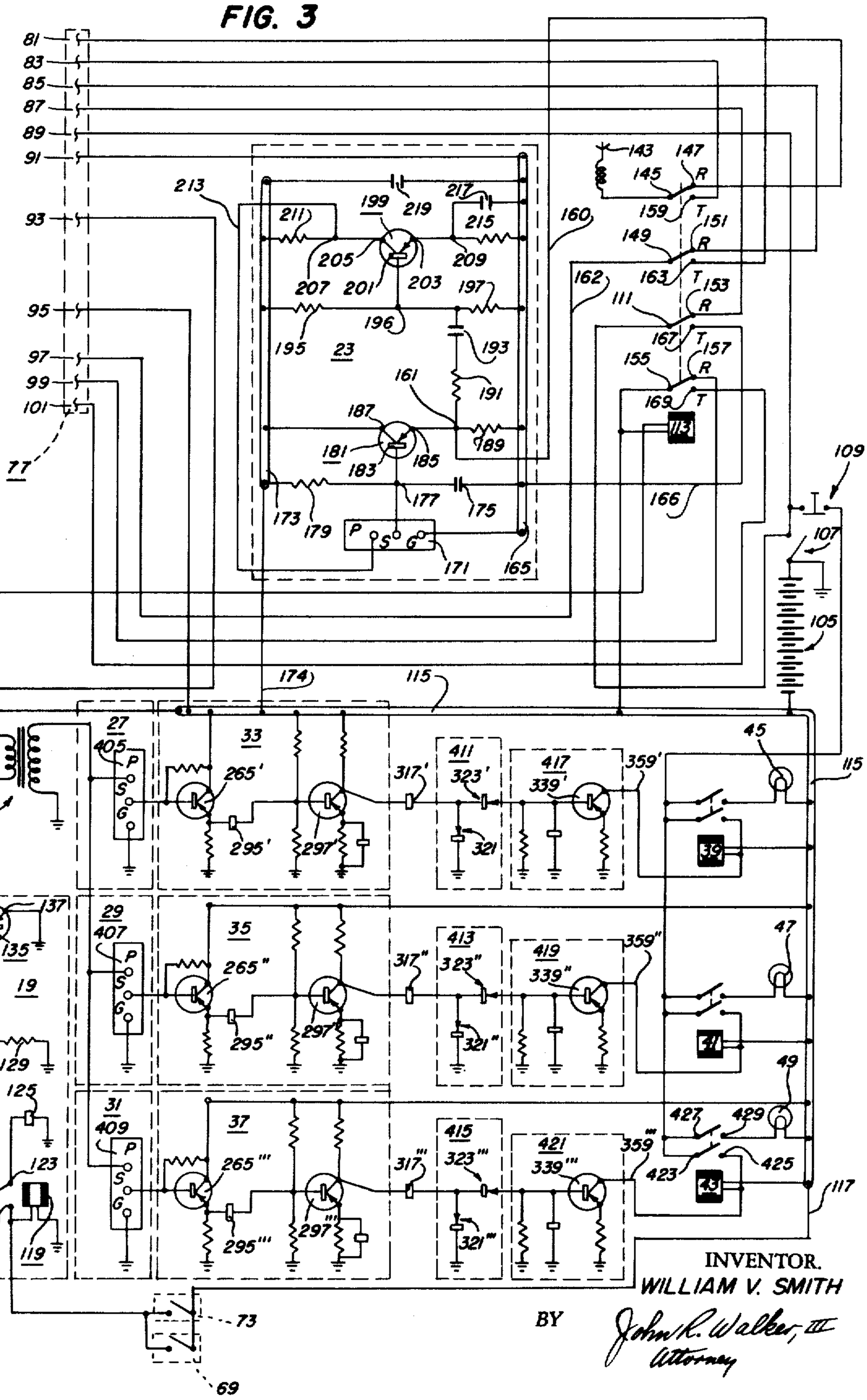

INVENTOR.
WILLIAM V. SMITH

BY John R. Walker, III
Attorney

FIG. 4

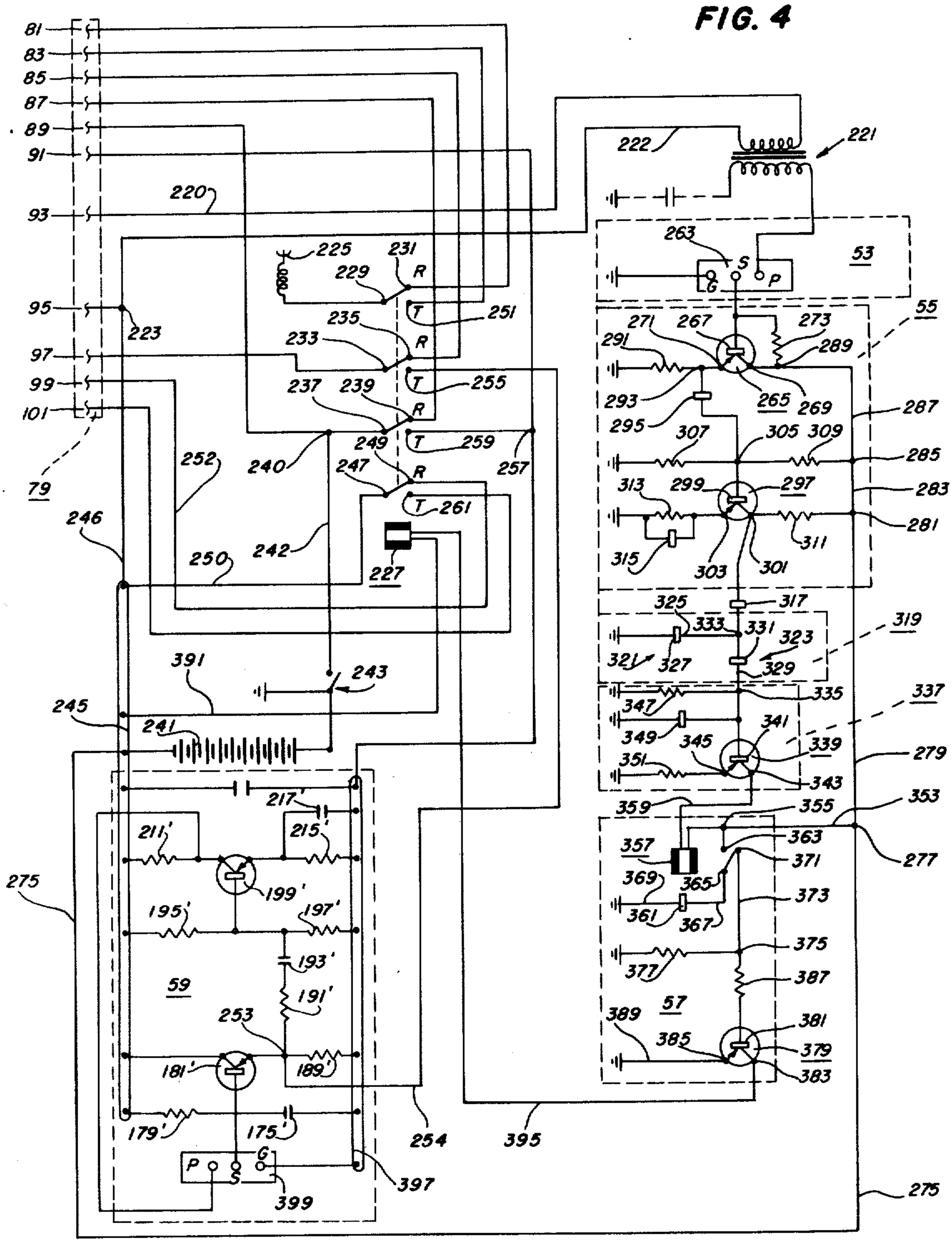

INVENTOR.
WILLIAM V. SMITH
BY John R. Walker, III
Attorney

FREIGHT SECURITY SYSTEM

BACKGROUND OF THE INVENTION

1. Field of the Invention

This invention relates to two-way electronic communications systems for use with security systems, particularly safe-guarding freight against theft while in transit.

A problem of increasing magnitude prevails in the field of transportation wherein certain packages of freight are stolen from the dock site, or the like, particularly high value items. The problem has many facets, e.g., frieght handlers having unscrupulous characters colluding with truck drives of bona fide agencies having legitimate business at the dock site place the high-valued commodity onto the truck where it may be transported to an assembly point for receiving the stolen property. The obvious solution to the abovementioned problem is to simply place an armed guard with the package so that it may be under constant surveillance by security personnel. This solution is costly in manhours. Additionally, a cunningly planned scheme could Conceivably involve nullifying the guard's effectiveness by inducing bodily harm or the like. However, the usual practice is for the unscrupulous personnel to concentrate their efforts on the packages which are not under surveillance.

SUMMARY OF THE INVENTION

The present invention is directed towards overcoming the abovementioned problem. Solving the problem would be greatly simplified by simply placing a transmitter in the package which continuously is transmitting a radio signal. This radio signal could be monitored by a receiver, thus constantly providing adequate surveillance for the freight package. However, constantly operating a transmitter with sufficient output wattage to pass through the truck strucure, etc., requires power in excess of feasible present day sources. On the other hand, with the use of the present invention, the receivers therein utilizing present day equipment, e.g., solid state electronics transceivers or the like, can be continuously operated over a long period of time, i.e., commensurate with realistic shipping schedules.

Implementation of the freight security system of the present invention provides the security personnel with a positive means of providing electronic surveillance of the particular freight package. The concept of the present invention is to plant a unique transceiver in the freight package which responds with a coded signal when properly interrogated, i.e., with a coded radio frequency. The system includes a second transceiver which is monitored by security personnel, and which is positioned at a strategic location. The monitored transceiver may be automatically triggered each time a conveyance means, e.g., a truck or the like, passes a particular point or it may be triggered manually. Triggering the monitored transceiver causes the transmitted carrier frequency to be modulated with a first coded audio signal. The planted transceiver responds with a second coded signal, if the first signal was of the proper frequency. The monitored transceiver includes a plurality of decoding networks and a plurality of neon lights which respectively respond to signals accepted by the decoding networks. Each light and associated decoding network monitors a separate freight package for purposes of alerting the security personnel when unauthorized movement of the freight package is occurring.

The system has the capability of simultaneously safeguarding numerous packages, e.g., 50 or more, positioned at one location. Additionally, the system is capable of discriminating or pinpointing the particular conveyance means that is carrying the freight package.

BRIEF DESCRIPTION OF THE DRAWINGS

FIG. **1** is a block diagram of the freight security system of the present invention.

FIG. **2** is a schematic drawing of a solid state transceiver, the switching mechanism for changing the transceiver from the receiving mode to the transmitting mode, the speaker, and the microphone being deleted. The interconnecting circuitry terminates at a plug which facilitates connecting the transceiver to the components schematically depicted in FIG. **3** or the components schematically depicted in FIG. **4.**

FIG. **3** is a schematic of the components peculiar to the equipment monitored by the security personnel. The interconnecting circuitry terminates at a plug which connects with the plug depicted in FIG. **2.**

FIG. **4** is a schematic of the components peculiar to the equipment which is intended to be planted in a freight package. The interconnecting circuitry terminates at a plug which is intended to be connected to the plug depicted in FIG. **2.**

DESCRIPTION OF THE PREFERRED EMBODIMENT

The freight security system of the present invention is character referenced in FIG. **1** of the drawings by the numeral **11** and generally comprises at least one base transmitting and receiving station **13** and a plurality of portable solid state transponders **15** (one being shown in FIG. **1**). It should be understood that since each of the plurality of transponders are identical one with the other, it is considered expedient to depict a singular transponder for fully describing the system.

The base station **13** generally comprises an activating apparatus **17** for initially activating a trigger circuit **19** which simultaneously triggers or causes to be energized a typical transmitter circuit **21** and a unique encoder circuit **23.** The audio frequency output of the encoder **23** is modulated with the transmitting carrier frequency. The base station **13** also includes a typical receiver circuit **25** having a unique demodulated audio frequency output coupled to a plurality of decoder circuits **27, 29, 31.** It should be pointed out that the system **11** preferably includes at least one decoder circuit for each transponder **15.** In this regard, the system **11** preferably comprises numerous substantially identical decoder circuits, e.g., upwards of **50,** and for expediency three are conveniently depicted to fully describe the system **11.**

The base station **13** additionally includes a plurality of amplifier circuits **33, 35, 37** which respectively respond to the decoder circuits **27, 29, 31** under prescribed circumstances yet to be disclosed. The outputs of the amplifiers **33, 35, 37** are coupled to respective relays **39, 41, 43** which, when energized, cause respective indicators **45, 47, 49,** e. g., neon lights or the like, to be energized.

The transponder **15** generally comprises a typical receiver circuit **51** for demodulating the encoded audio frequency which is coupled to a decoder circuit **53.** The output from the decoder **53** is coupled to an amplifier circuit **55** and the output from the amplifier **55** is

coupled to a trigger circuit **57.** The transponder **15** also includes an encoder circuit **59** and a typical transmitter circuit **61,** both of which are energized simultaneously by the trigger circuit **57.**

Referring still to FIG. **1** of the drawings, the following principle of operation will serve as a general overview for the system **11** of the present invention. The concept of the present invention is to plant a transponder **15** into a box of package **62** (a portion only being shown in FIG. 1) which is intended to be safe-guarded against theft while in transit and/or while sitting at a dock site. The system **11** will alert security personnel to the fact that this box **62** is being moved past a certain predetermined location. It should be understood that the transponder **15** includes a self-contained power supply and that the receiver **51** is placed in an "on" position when planted. It should be further understood that the security system **11** of the present invention may be adapted to any conveyance means; however, in order to simplify the disclosure of the preferred embodiment, the trucking industry will herein be used as an example. The system is intended for operation on a frequency of 26.995 megacycles, which is designated Class C operation. Accordingly, the transmitters **21, 61** are tuned so as to have a carrier frequency **63** within this range. Obviously the receivers **25, 51** are also tuned to the carrier frequency **63** as above-described. There are numerous operational procedures and/or physical layouts for implementing the system **11** of the present invention. Accordingly, the following disclosure is intended to be one example:

The dock site (not shown) referably is provided with a guardhouse which houses the security personnel and the base station **13.** All outgoing trucks (not shown) are funneled past a predetermined point which is provided with an elongated resilient tubular member **65,** e. g., a rubber hose or the like, which terminates at the one end with a closure means, e.g., a plug or the like, and communicates at the other end with an enclosed bellows assembly **67.** When the truck passes over the air hose **65,** the captured air displaces the bellows assembly **67,** closing the switch **69.**

A terminal **71** is connected to a power source and closing the switch **69** activates the triggering circuit **19.** The triggering circuit **19** can also be activated manually by the security personnel by closing a switch **73** which is physically located within the guardhouse, i.e., preferably on the cabinet structure (not shown) housing the electronic components. The trigger circuit simultaneously energizes the transmitter **21** and the encoder **23.** The encoder **23** being an audio oscillator, oscillates at a very closely controlled audio frequency, e.g., 907.5 cycles per second, which modulates the carrier frequency **63.**

In the event the truck which caused the activating apparatus **17** to operate does not contain the package having the transponder **15** planted therein, the sequence is thusly terminated.

However, in the event the truck which caused the activating apparatus **17** to operate is carrying the package having the transponder **15** planted therein, the receiver **51** thereof will demodulate the encoded audio frequency, e.g., 907.5 cps, which in turn is coupled to the decoder **53.** The decoder **53,** being tuned to accept or pass the frequency of 907.5, passes a signal on to the amplifier **55.** The amplifier **55** increases the strength of the signal and activates the trigger circuit **57.** The trigger circuit simultaneously energizes the encoder **59** and the transmitter **61.** The encoder **59** modulates the carrier frequency **63** with a second very closely controlled audio frequency, e.g., 892.5 cycles per second, which is transmitted back to the base **13** and is received by the receiver **25.**

The receiver **25** demodulates the audio frequency 892.5 from the carrier frequency **63** and this audio output is connected to the plurality of decoders **27, 29, 31.** A decoder **27** is tuned to a precise audio frequency, e.g., 862.5; the decoder **29** is tuned to a precise audio frequency, e.g., 877.5; and the decoder **31** is likewise tuned to a precise audio frequency, e. g., 892.5. In other words, regardless of the number of decoders contained in the system **11,** each decoder preferably is tuned to its individually unique audio frequency. The audio output frequency 892.5 from the receiver **25** is simultaneously felt at the decoders **27, 29** and **31.** The decoders **27, 29** reject this frequency, however, the decoder **31** accepts or passes the frequency to its individual amplifying circuit **37.**

The output from the amplifier **37** is coupled to the relay **43** which in turn energizes the neon light **49.** The security personnel, being familiar with the scheduled departure of the box **62** having the planted transceiver therein are alerted to the fact that the box in question is in fact on the truck being interrogated. In the event the box is being legally transported, the truck merely moves on through the control point to its destination or to other interrogation stations **13.** The interrogation stations **13** may be mobile so as to interrogate the truck in transit in accordance with detailed operating procedures peculiar to the conveyance means. On the other hand, in the event the box containing the transceiver **15** is being illegally transported, the security personnel obviously take the appropriate corrective measures. These corrective measures alluded to may involve lengthy numerous detailed procedures and/or other mobile interrogators **13** for maintaining surveillance of the package containing the transponder **15,** so as to apprehend other involved individuals, etc.

The receiver **51** and the transmitter **61** may be two separate components, or they may be combined into a suitable single transceiver such as the Realistic Model No. TRC–45, which is a product of Radio Shack a division of Tandy Corporation. This transceiver is a two watt, ten transistor citizens band device and is schematically depicted in FIG. **2** of the drawings. FIG. **2** of the drawings substantially is a copy of the schematic contained in the Realistic Model No. TRC–45 catalog No. 21–130.

The transmitter **21** and the receiver **25** of the base station **13** may be two separate components, or they too may be combined into a single transceiver similar to the Realistic TRC–45, accordingly, a transceiver of the type schematically depicted in FIG. **2** is intended to be used at the base station **13** and a similar one with the transponder **15.**

However, it may be desirable that the transceiver containing the transmitter **21** and the receiver **25** for the base **13** have a greater wattage output, e. g., **20** watts or the like. Numerous transceivers of varying tradenames and wattage outputs are commercially available, and the principle of operation is well known. Accordingly, a brief description of the transceiver depicted in FIG. **2** will suffice for present purposes and references should be made to the technical data pro-

vided by the manufacturer of the particular transceiver used for a more detailed description of the particular transceiver incorporated.

FIG. 2 depicts a plug 75 having many contact pins, e. g., a cannon plug or the like, for expedience in disclosing the interconnecting circuitry between the respective FIGS. 2 and FIGS. 3 and 4. In other words, the plug 75 is optional and is used merely as a convenience in explaining the drawings. The above explanation obviously pertains to a plug 77 (FIG. 3) and a plug 79 (FIG. 4), i. e., the cannon plug 75 being a female type plug having structure suitable for receiving either of the two male type plugs 77, 79. Accordingly, the three plugs 75, 77, 79 will have identically numbered pins.

Pin 81 carries the input signal to the receiver from the appropriate antenna. Pin 83 carries the output signal from the transmitter to the appropriate antenna. It should be understood that the general description of the receiver cannot conveniently be directed towards either the base station 13 or the transponder 15 since the structure for the transceiver incorporated at the base station and the structure of the transceiver incorporated with the transponder are different; therefore, a detailed disclosure of the components peculiar to the base station 13 and the transponder 15 will subsequently be disclosed.

Pin 85 carries the volume control feedback for the receiver. Pin 87 carries the power input for the receiver from the battery or other power supply. Pin 89 carries the power input to the final audio stages and/or the modulation stage of the transmit position from the battery or other power supply. Pin 91 carries B+ supply for transmitter 21. Pin 93 carries the receiver output; pin 95 carries the second conductor for the power input from the battery or other power supply. Pin 97 carries the encoder input signal or audio frequency to the transmitter. Pin 99 carries the second conductor from the battery for certain components while the transceiver is in the receiver mode. Pin 101 carries the second conductor from the battery or for various components while the transceiver is in the trasnmitting mode.

The potentiometer 103 (FIG. 2), being the volume control for the receiver, varies the amplitude of the audio signal from the appropriate receiver, i.e., receiver 25 or receiver 51, to the respective decoder. The potentiometer 103, accordingly, provides the system 11 with a range control, i.e., enabling the base station 13 to adjust the range so that it is restricted to interrogating trucks within a predetermined radius. The radius referred to would obviously include a space which could conceivably be occupied by only one truck, thus precluding the likelihood of inadvertently interrogating two trucks simultaneously.

Referring now to FIG. 3 of the drawings wherein the components peculiar to the base station 13 and which are married to a transceiver such as depicted in FIG. 2, by connecting the plug 75 to the plug 77, are schematically illustrated. A power supply 105 preferably having a 12 volt direct current output is symbolized in the drawing as being a battery, however, the power supply 105 may be a 12 volt D. C. power supply derived from 115 volt alternating current in order to enhance reliability. In this regard, a preferred arrangement wherein an emergency backup of a 12 volt battery which is automatically connected to the system 11 in the event of a power failure is advisable. The positive terminal of the power supply 105 is grounded and leads to a single pole single throw master switch 107.

Closing the switch 107 completes the circuit to a three-way junction which completes the circuit to: First, a push-button two-point "break" switch 109; secondly, a contact 111 of a four pole double throw relay 113; thirdly, pin 89 of the cannon plug 77. It should be understood that the numerous relay schematically depicted in the drawings are shown in a de-energized position.

The negative side of the power supply 105 is connected to a negative bus bar 115. A conductor 117 connected at the one end of the bus bar 115 leads to the two activating switches 69, 73. The switches 69, 73 are single pole single throw switches connected in parallel so that closure of either completes the circuit to a single pole double throw relay 119, a component of the trigger circuit 19. Energizing the relay 119 completes the circuit between the contacts 121, 123 which places the 12 volts on a 100 mfd capacitor 125, thus charging the capacitor 125. The activating switch, i.e., either switch 69 or switch 73, is held in a closed position only momentarily and then returned to the open position. Accordingly, the relay 119 is energized briefly but sufficiently to charge the capacitor 125. The relay 119, being de-energized, returns to the normal position which completes the circuit between a contact 127 and the contact 123. The capacitor 125, having been charged, acts as a power supply and sends current through 15 K resistor 129 for a period of time selectively determined by the values chosen for the capacitor 125 and the resistor 125.

A 15 K ohm resistor 131 is connected at the one end to the junction of the capacitor 125 and the resistor 129 and at the other end to the base 133 of a GE–2 transistor 135, the transistor 135 having the base 133, the emitter 137 and the collector 139. The voltage felt across the biasing resistor 131 on the base 133 causes the collector 139 to pull electrons from the emitter 137. In other words, the circuit for the above-mentioned electron or current flow is through a conductor 141 having the one end thereof connected to the collector 139 and the other end connected to the winding of the relay 113, the other end of the winding 113 being connected to the negative bus bar 115. Accordingly, current flows from the power supply 105 through the transistor 135 and the relay 113, thus energizing the relay 113 for a predetermined period of time.

The function of the relay 113 is to switch the base station 13 from a receiving mode to a transmitting mode and from the transmitting mode back to the receiving mode. In other words, the receiver 25 is normally on while the relay 113 is de-energized, and energizing the relay 113 turns on receiver off and activates the transmitter 21 for a predetermined period of time. This predetermined period of time is calculated by the values selected or the time constant of the capacitor 125 and the resistor 129. I prefer to have the transmitter activated for approximately five seconds before the relay 113 returns the base station 13 to the receiver mode.

The relay 113, when in the receive mode, completes the circuit from a transmitting and receiving antenna 143 through a pair of contacts 145, 147, the contact 147 having one end of a conductor connected thereto, the other end of which is connected to the pin 81 of the plug 77. Secondly, the relay 113, when de-energized,

completes the circuit between the pins **85, 97** of the plug **77** through a pair of contacts **149, 151.** Thirdly, the relay **113** delivers B+ from the power supply **105** to the pin **87** of the plug **77** through the aforementioned contact **111** and a contact **153.** Fourthly, the de-energized relay **113** connects B— of the power supply **105** to the pin **99** of the plug **77** through a pair of contacts **155, 157.**

When the relay **113** is energized, i.e., the base station **13** being in the transmit mode, the antenna **143** is connected to the output of the transmitter through the pin **83** of the plug **77** and a pair of contacts **145, 159.** Secondly, the output of the encoder circuit **23,** e.g., an audio frequency of 907.5 cycles per second, modulates the carrier frequency of the transmitter **21** by having one end of a conductor **160** connected to an output terminal **161** of the encoder circuit **23** and the other end connected to a contact **163** of the relay **113,** a second conductor **162** completes the circuit from the contact **149** to the pin **97** of the plug **77.** Thirdly, B+ is applied to a positive bus bar **165** of the encoder circuit **23** by having one end of a conductor **166** connected thereto and the other end being connected to a contact **167** of the relay **113,** i. e., the contact **111** being connected to B+ as previously described. Fourthly, the negative bus bar **115** is connected to the pin **101** of the plug **77** through a contact **169** of the relay **113,** i. e., the contact **155** being connected to the bus bar **115** as previously described.

The heart of the encoder circuit **23** is a subminiature piezoelectric tuning fork **171** manufactured under the tradename of "Microfork" which is manufactured by the Murato Manufacturing Co., Ltd., of 160 Broadway, N.Y., N.Y. The microfork used in the present invention for the encoder is a model EFM and is a newly designed tuning fork subminiaturized from Pieleforks. This model is now widely used for bellboy systems, selective calling, remote control and tone control of electronic musical instruments where compactness, reggedness and economy are required. The microfork **171,** having a length slightly greater than one inch and transversal dimensions of less than one-third inch, operates in the frequency range of 360 – 2,900 cps with an accuracy of 0.5 cps up to **999** cps and _1 cps from 1,000 – 2,900 cps. The encoder circuit **23** is substantially identical with the test circuit included in the technical data provided by the Murata Manufacturing Co. pertaining to the microfork **171.**

The microfork **171** has three predetermined terminals P, S and G, i.e., the preferred connection is: The terminal P is the output terminal; the terminal S is the input terminal; and the terminal G is the ground terminal. The encoder circuit **23** includes: (1) A negative bus bar **173,** connected by a conductor **174,** to the power supply negative bus bar **115.** (2) A capacitor **175** having a value determined by the frequency selected, i. e., the value is 0.005 mfd for frequencies under 1,000 cps and the value is 0.001 mfd for frequencies about 1,000 cps. The capacitor **175** has one side thereof connected to the positive bus bar **165** and the other side connected to the input terminal S of the microfork **171,** i. e., the input terminal S leading to a common point **177.** (3) A 100 K ohm resistor **179** having one end thereof connected to the common point **177** and the other end connected to the negative bus bar **173.** (4) A GE–2 transistor **181,** having a base **183,** an emitter **185** and a collector **187,** with the base thereof being connected to the common point **177,** the collector **187** being connected to the negative bus bar **173** and the emitter **185** being connected to the output terminal **161** of the encoder circuit **23.** (5) A 10 K ohm resistor **189** having one end thereof connected to the output terminal **161** of the encoder circuit **23** and the other end connected to the positive bus bar **165.** (6) A 1 K ohm resistor **191** having one end thereof connected to the output terminal **161** and the other end connected to the one end of a 10 mfd capacitor **193.** (7) A 33 K ohm resistor **195** having one end thereof connected to the negative bus bar **173** and the other end connected to a common point **196.** (8) A 4.7 K ohm resistor **197** having one end thereof connected to the common point **196** and the other end connected to the positive bus bar **165.** (9) The other end of the capacitor **193** is connected to a point between the junction of the resistors **195,** or in essence the common point **196.** (10) A second GE–2 transistor **199,** having a base **201,** an emitter **203** and a collector **205,** has the base thereof **201** connected to the common point **196,** the collector **205** connected to a common point **207,** and the emitter **203** connected to a common point **209.** (11) A 5.6 K ohm resistor **211** has one end thereof connected to the common point **207** and the other end connected to the negative bus bar **173.** (12) A conductor **213** has one end thereof connected to the common point **207** and the other end connected to the P terminal or the output terminal of the microfork **171.** (13) A 1 K ohm resistor **215** has one end thereof connected to the common point **209** and the other end connected to the positive bus bar **165.** (14) A 10 mfd capacitor **217** has one end thereof connected to the common point **209** and the other end connected to the positive bus bar **165.**

The above network of electronic components comprises an audio oscillator or encoder circuit **23** having a closely controlled frequency output, e.g., 907.5 cps ± 0.5 cps. The carrier frequency **63** is modulated with this frequency, i. e., 907.5 cps, when the relay **113** is energized, as above-described. A 0.0047 mfd capacitor **219,** having the one end thereof connected to the negative bus bar **173** and the other end connected to the positive bus bar **165,** is optional and is used herein to electrically isolate the transmitter **21** and receiver **25** (FIG. **2**), having a negative ground, from the circuitry schematically depicted in FIG. **3** which has a positive ground.

Thus far we have the base station **13** sending a coded signal, i. e., 907.5 cps, from the transmitter **21** to the antenna **143.** The carrier frequency **63** radiates outwardly from the antenna **143** in all directions and assuming that a truck (not shown) having a carton **62** containing the planted transponder **15** therein is physically located at the interrogation point, the receiver **51** of the transponder **15** will receive the transmission. The receiver **51** detects of demodulates the coded signal, i.e., 907.5 cps, which is delivered to the pin **93** of the plug **75** (FIG. **2**).

Referring now to FIG. **4** of the drawings wherein it may be seen that a conductor **220,** having one end thereof connected to the pin **93** of the plug **79** and the other end connected to the primary windings of a step up transformer **221,** carries the output from the receiver **51.** It should be pointed out that normally the output of a receiver is delivered to a step down transformer which steps up the current sufficiently to drive the speaker element. The current requirements for the

embodiment of the present invention are minimum; however, the voltage or amplitude of the signal is stepped up across the transformer **221.** A conductor **222,** having the one end thereof connected to the primary of the transformer **221** and the other end connected to a common point **223,** completes the circuit for the input signal, i.e., the common point **223,** having a B– potential yet to be described, is connected to the pin **95** of the plug **77.**

The transponder **15** has a transmitting and/or receiving antenna **225** and a four pole double throw relay **227** having a function substantially identical to the relay **113** for the base station **13,** above-described. The relay **227,** when de-energized, places the transponder **15** in the receiver mode by connecting the antenna **225** to the receiver **51** through a pair of contacts **229, 231,** i.e., a conductor connecting the antenna **225** to the contact **229** and a second conductor connecting the second contact **231** to the pin **81** of the plug **79.** The pins **85, 97** of the plug **79** are connected by a pair of contacts **233, 235,** i.e., a conductor connects the pin **97** to the contact **233** and a second conductor connects the pin **85** to the contact **235.** The pin **87** is connected to a B+ potential, yet to be described, by a pair of contacts **237, 239,** i.e., a conductor connects the pin **87** to the contact **239** and a second conductor connects a common point **240** to the contact **237.** B+ is applied to the common point **240** by having the one end of a conductor **242** connected to B+ and the other end thereof connected to the common point **240.**

It should be pointed out at this time that the transponder **15** includes a power supply **241,** e.g., preferably a 12 volt battery or ten individual cells connected in series so as to deliver 12 volts direct current. The positive side or B+ of the power supply **241** leads to a master "on" or "off" switch **243** which applies B+ to the above-mentioned common point **240.** It should be observed that the positive side of the power supply **241** is grounded. The negative side or B– of the power supply **241** is connected to a negative bus bar **245** and a conductor **246** connects the above-mentioned common point **223** to the bus bar **245.** A pair of contacts **247, 249** completes the circuit between the negative bus bar **245** and pin **99,** i.e., a conductor **250** connects the bus bar **245** and the contact **247** and a conductor **252** connects the pin **99** and the contact **249.**

The transponder **15** is placed in the transmitting mode when the relay **227** is energized. Energizing the relay **227**: first places the output from the transmitter **61** to the pin **83** of the plug **79.** The pin **83** is connected to the antenna **225** by a contact **251** and the contact **229,** i.e., a conductor connects the pin **83** to the contact **251.** Secondly, the pin **97** is connected to an output terminal **253** of the encoder circuit **59,** i.e., a conductor **254** connects the output terminal **253** to a contact **255** of the relay **227.** Thirdly, a common point **257** is connected to B+ of the power supply **241** by a contact **259,** i.e., a conductor connects the contact **259** to the common point **257,** the contact **249** being tied to B+ as previously described. Fourthly, a contact **261** connects the negative bus bar **245** or B– to th pin **101** of the plug **79,** i.e., a conductor connects the contact **261** to the pin **101** and the conductor **250** having the one end thereof connected to the contact **247** is connected at the other end to the bus bar **245** as previously described.

Continuing now with the normal sequence of operation and still referring to FIG. **4** of the drawings wherein the output, i.e., 907.5 cps, of the receiver **51** was placed on the primary winding of the transformer **221,** the relay **227** being de-energized. One end of the secondary winding of the transformer **221** is connected to the P or output terminal of a receiving type microfork **263.** It should be explained that the microfork model EFM is provided by the Murata Manufacturing Co. in two separate configurations: a transmitter or sender type microfork designated EFM–S and a receiver type, for responding to or passing a narrow width of audio frequencies, designated EFM–R. The previously described specifications for microforks are directed to both the EFM–R and the EFM–S types. It should be noted that the other end of the secondary winding of the transformer **221** is void of the usual ground connection, i.e., having interelectrode capacitance only or in other words the circuit for the secondary is open which allows the voltage from the secondary to be felt at the terminal P but does not permit current flow through the microfork **263.**

The microfork **263,** as above described, is manufactured or fixed to be responsive to a predetermined narrow band of audio frequencies and to reject all other frequencies. Since the base station **13** is transmitting a carrier frequency **63** which is modulated by the encoder **23** with an assumed frequency of 907.5 cps ± 0.5 cps, the microfork **263** must be selected to be responsive to the assumed frequency of 907.5 cps. The narrow band width of frequencies which the microfork **263** will respond to is approximately 902 cps – 1,002 cps, i.e., the microfork **263** will reject any other frequency.

The G terminal of the microfork **263** is connected to ground, and assuming that the incoming frequency was within the above-specified range, the microfork will pass a minute signal from the S terminal to the audio amplifying circuit **55.**

The first stage of the audio amplifying circuit **55** comprises: (1) A GE–2 transistor **265,** having the usual base **267,** the collector **269,** and the emitter **271.** The minute signal from the microfork **263** is coupled to the base **267.** (2) A 100 K ohm biasing resistor **273** having one end thereof connected to the base **267** and the other end connected to B– or the negative output of the power supply **241,** i.e., a conductor **275** having one end connected to the negative bus bar **245,** and the other end terminating at a common point **277** which receives the one end of a second conductor **279,** the other end being connected to a second common point **281** which receives the one end of a third conductor **283,** the other end of which is connected to a third common point **285** which receives the one end of a fourth conductor **287,** the other end being connected to a fifth common point **289** which receives the other end of the resistor **273.** The collector **269** of the transistor **265** is also connected to the common point **289.** (3) A 10 K ohm bias resistor **291** has the one end thereof connected to ground, and the other end connected to a common point **293.** The emitter **271** of the transistor **265** is also connected to the common point **293.** The amplified output of this first stage is coupled to a second amplifying stage by a 10 mfd electrolytic capacitor **295.**

The second amplifying stage comprises: (1) A second GE–2 transistor **297,** having the usual base **299,** a collector **301,** and an emitter **303,** The base **299** of the

transistor **297** is connected to a common point **305.** The coupling capacitor **295** has one end thereof connected to the common point **293** and the other end connected to the common point **305** which places the amplified signal of the first stage onto the base **299** of the second stage transistor **297.** (2) A 15 K ohm resistor **307** and a 39 K ohm resistor **309** comprise a voltage divider network by having the one end of the resistor **309** connected to the common point **285** and the other end connected to the common point **305,** also, the one end of the resistor **307** being connected to the common point **305** and the other end thereof being connected to ground. (3) A 4.7 K ohm biasing resistor **311** having one end thereof connected to the common point **281** and the other end being connected to the collector **301** of the transistor **297.** (4) A 1 K ohm biasing resistor **313,** having one end thereof connected to ground and the other end connected to the emitter **303.** (5) A 10 mfd electrolytic capacitor **315** connected in parallel with the resistor **313,** i.e., the one end of the capacitor **315** being connected to one end of the resistor **313,** and the other end thereof being connected to ground. The capacitor **315** is a bypass capacitor, i.e., prevents the signal from going to ground.

A 10 mfd electrolytic capacitor **317** couples the output signal from the second stage of the amplifier circuit **55** to a rectifier circuit **319,** comprising a pair of 1 N 34 diodes **321, 323.** The diode **321** has the usual anode **325** and cathode **327** and the diode **323** has the usual anode **329** and the cathode **331.** The anode **325** is connected to the cathode **331** at a common point **333,** the cathode **327** is connected to ground, and the anode **329** is connected to a second common point **335.** The coupling capacitor **317** has the one end thereof connected to the collector **301** of the transistor **297** and the other end connected to the common point **333.**

A coupling means **337** couples the rectified output of the rectifier **319** to the triggering circuit **57.** The coupling means **337** comprises: (1) A GE–2 transistor **339,** having the usual base **341,** the collector **343,** and the emitter **345.** (2) A 22 K ohm biasing resistor **347.** (3) A 10 mfd electrolytic capacitor **349.** The one end of the resistor **347** is connected to the common point **335** and the other end is connected to ground. The filtering capacitor **349** filters the signal onto the transistor **339,** i.e., the signal now being a steady substantially DC voltage. The one end of the capacitor **349** is connected to a point having the same potential as does the common point **335** and the other end of the capacitor **349** is connected to ground. The base **341** is connected to this point, i.e., having the same potential as does the common point **335.** The coupling means **337** also includes a **68** ohm biasing resistor **351** having the one end thereof connected to the emitter **345** and the other end connected to ground.

This signal or steady DC voltage being applied to the base **341** of the transistor **339** causes current to flow from the emitter **345** to the collector **343,** i.e., the path of current flow being through the resistor **351** to ground. Thence the current flows to the positive side of the power supply **241,** thence through the power supply or out the negative bus bar **245** through the conductor **275** to the common point **277,** thence through a conductor **353** past a common point **355** to one end of the winding of a single pole double throw relay **357,** thence out the other side of the relay **357** through a conductor **359** to the collector **343,** i.e., the relay **357** being a part of the trigger circuit **57.**

Thus, the relay **357** is energized, which charges a 250 mfd electrolytic capacitor **361,** i.e., the circuit being completed through a pair of contacts **363, 365,** the contact **363** being at the same potential as the common point **355** or having a negative 12 volt potential, thence through a conductor **367** which connects one end of the capacitor **361** to the contact **356** thence through a conductor **369** which connects the other end of the capacitor **361** to ground, thence from ground to the positive side of the power supply **241,** all being additional components of the trigger circuit **57.** The relay **357** will remain energized so long as the transistor **339** feels the constant voltage from the filtering circuit **319**; howver, the base station **13** triggering circuit **19** preferably is programmed so as to key the transmitter **21** and trigger the encoder **23** for a duration of 5 seconds, after which time it goes back to the receive mode. Accordingly, the output of the receiver **51** of the transponder **15** will also have a duration 1f 5 seconds, after which time the signal across the transformer **221** ceases since the voltage felt on the microfork **263** is nil, thence the input to the amplifier circuit **55** is nil, thence the input to the filtering network **319** is nil which causes current to cease flowing from the emitter **345** to the collector **343** of the transistor **339** which de-energizes the relay **357** after the 5 second duration.

When the relay **357** is de-energized, the charged capacitor **361,** acting as a power source, starts to discharge through the conductor **367,** thence from the contact **365** to a third contact **371,** thence through a conductor **373,** having the one end thereof connected to the contact **371** and the other end connected to a common point **375,** thence through an 80 K ohm resistor **377,** having one end thereof connected to the common point **375** and the other end connected to ground, thence through the conductor **369** to the other side of the capacitor **361,** all being further components of the trigger circuit **57.** Accordingly, the common point **375** assumes a negative potential equal to the charge on the capacitor **361.**

The triggering circuit **57** also includes a GE–2 transistor **379,** having the usual base **381,** the collector **383,** and the emitter **385,** and a 15 K ohm bias resistor **387.** The voltage at the common point **375,** being biased by the bias resistor **387** is felt on the base **381** of the transistor **379** which causes current flow through the transistor **379,** i.e., the path of current flow being from the emitter **385** down through a conductor **389** to ground, thence to the positive side of the power supply **241,** thence out the negative bus bar **245** through a conductor **391,** having one end thereof connected to the negative bus bar **245** and the other end connected to the relay **227,** thence through the winding of the relay **227,** thence through a conductor **395,** having one end thereof connected to the relay **227** and the other end connected to the collector **383.**

Thus, the relay **227** is energized while the capacitor **361** is discharging, i.e., the period of time being selectively determined by the values chosen for the capacitor **361** and the resistor **377.** In this instance, the preferred period of time for the relay **227** to remain energized is 15 seconds. It should be understood that it may be desirable in other embodiments to have the relay **227** energized for other periods of time which are con-

sidered to be within the full intended scope and spirit of the present invention.

Energizing the relay **227** deactivates the receiver **51** and simultaneously keys the transmitter **61** and triggers the encoder **59**, i.e., the contacts **229, 251** place the antenna **225** in communication with the pin **83** of the plug **79**, the contacts **233, 255** place the output terminal **253** of the encoder **59** in communication with the pin **97**, the contacts **237, 259** places the positive side of the power source **241** or B+ on the common point **257** (the common point **257** communicating with the pin **91** and a positive bus bar **397** of the encoder circuit **59**), and the contacts **247, 261** place the negative bus bar **245** in communication with the pin **101**.

Accordingly, the transmitter **61** commences transmitting the carrier frequency **63** and the encoder **59**, having the bus bar **397** energized, commences oscillating at a predetermined audio frequency which is modulated or mixed with the carrier frequency **63**. The audio frequency of the encoder **59** is determined and closely controlled or stabilized by a subminiature piezoelectric tuning fork, e.g., a microfork Model EFM–S 399. It should be pointed out that the microfork **171** for the encoder **23** and the microfork **263** for the decoder **53** are always tuned to the same frequency, e.g., 907.5 cps, irrespectively of the number of transponders **15** incorporated with the system **11**. However, each transponder **15** will have its unique encoder **59** frequency, e. g., 892.5 cps, and the base station **13** will have a decoder circuit tuned to that unique frequency, e.g., the decoder **31** as previously described.

In this regard, the microfork **399** is tuned to the frequency peculiar to the specific transponder **15**, in this case 892.5 cps. The encoder circuit **59** (FIG. **4**) is identical to the encoder circuit **23** (FIG. **3**), i.e., the frequency of the microfork **399** differs from that of the microfork **171**, but the respective interconnecting circuits and values of their components are identical. Accordingly, the previous detailed disclosure of the encoder **23** is intended to encompass the encoder **59**. The output of the encoder **59**, i.e., 892.5 cps, leaves the encoder **59** from the output terminal **253** through the conductor **254**, havine one end thereof attached to the terminal **253** and the other end connected to the contact **255**, and enters the transmitter **61** through the pin **97** of the plugs **75, 79** where it modulates the carrier frequency **63**.

The base station **13** receives this carrier frequency **63** on the receiver **25** which detects or demodulates the encoder frequency, i.e., 892.5 cps, and this signal is placed on the pin **93** of the plugs **75, 77** (FIGS. **2** and **3**).

Referring now to FIG. **3** of the drawings, wherein it should be explained that the relay **113** is in the deenergized position, the incoming signal from the receiver **25** is between the pins **93, 95** of the plug **77** which are in communication with the primary windings of a step-up transformer **403**, e.g., having a ratio of 50 : 1. One end of the secondary winding of the transformer **403** is grounded, and the other end is connected to a series of decoder circuits **27, 29, 31**, i.e., the decoder **27** comprising a subminiature piezoelectric "receiving" tuning fork **405**, e.g., microfork model EFM–R, the decoder **29** comprising a subminiature piezoelectric "receiving" tuning fork **407**, e.g., a microfork model EFM–R, and the decoder **31** comprising a subminiature piezoelectric "receiving" tuning fork **409**, e.g., a microfork model EFM–R. The microforks **405, 407, 409** are in parallel one with the other, i.e., the P or output terminal of each is connected to a common point which is in communication with the secondary of the transformer **403** and the G or ground terminal of each is connected to ground. The S or input terminals of the respective microforks **405, 407, 409** are connected to the amplifier circuits **33, 35, 37**.

The amplifier circuits **33, 35, 37** are individually identical to the amplifier circuit **55** (FIG. **4**) previously described. Consequently, the detailed disclosure of the amplifier circuit **55** is intended to encompass the amplifier circuits **33, 35, 37**, i.e., the value of the components and the interconnecting circuitry are identical.

The respective outputs from the amplifiers **33, 35, 37** are coupled to a plurality of rectifier circuits **411, 413, 415**. The rectifier circuits **411, 413, 415** are individually identical to the rectifier circuit **319** (FIG. **4**). Consequently, the detailed disclosure pertaining to the rectifier circuit **319** is intended to encompass the rectifier circuits **411, 413, 415**, additionally, the respective coupling capacitors **317, 317′, 317″, 317‴** are identical one with the other.

The output of the respective rectifier circuits **411, 413, 415** are coupled to the relays **39, 41, 43** by a plurality of coupling means **417, 419, 421**. The coupling means **417, 419, 421** are individually identical to the coupling means **337** (FIG. **4**). Consequently, the detailed disclosure pertaining to the coupling means **337** is intended to encompass the plurality of coupling means **417, 419, 421**.

The relays **39, 41, 43**, being identical one with the other, are double pole single throw holding relays for respectively energizing the plurality of indicator means, e. g., the neon lights **45, 47, 49**. Accordingly, a detailed description of each relay **39, 41, 43** would be redundant.

In order to follow the signal, i. e., 892.5 cps from the transformer **403**, it is necessary to assign a like frequency to one of the plurality of the microforks **405, 407, 409**. Therefore, the microfork **409** is pretuned at the factory to the frequency of 892.5 cps and will pass a frequency within 5 cps of this frequency and reject all others. In this regard, the microforks **405, 407** are respectively tuned to a fixed frequency of 862.5 cps and 877.5 cps and will pass frequencies within 5 cps of these fixed frequencies and will reject all other frequencies.

The signal, i. e., 892.5 cps from the transformer **403**, is simultaneously felt at the microforks **405, 407** and **409**. The microforks **405, 407** reject this signal; however, the microfork **409** accepts or passes the signal to the S or input terminal. This signal is received by the two stage audio amplifier circuit **37** which passes it through the coupling capacitor **317‴** to the filtering circuit **415**. The filtered signal, i. e., a substantially steady DC voltage, is coupled to the relay **43** by the coupling means **421**, a conductor **359‴** carrying the positive gate type signal to the relay **43**. Thus, the relay **43** is energized, completing the circuit between the contacts **423, 425, 427, 429** thereof. The one side of the winding of the relay **43** and one side of the neon light **49** are both tied to the negative bus bar **115**. The contacts **427, 423** are connected to the switch **109** which is connected to the positive side of the power supply **105**. Energizing the relay **43** momentarily, e. g., 15 seconds or the like, causes the contacts **423, 425** to

complete the circuit from the positive side of the power supply to the winding of the relay **43**, thus holding the relay **43** in an energized position until it is manually de-energized by pushing the pushbutton switch **109**. At this same time, the circuit is complete across the contacts **427, 429** which places the positive side of the power supply on the other side of the neon light **49**, thus causing it to be energized until the switch **109** is manually pushed.

The illumination of the neon light **49** alerts the security personnel to the fact that the package containing the transponder **15** is in the fact in the truck or other means of conveyance being interrogated.

Obviously, the neon lights **45, 47** are for other transponders **15** which may have been planted in other cartons. Additionally, the base station **13** would include numerous neon lights (not shown) for safe-guarding a like number of cartons, e. g., 50 or more,

From the foregoing, it will be seen that I am enabled to safe-guard numerous freight packages against theft while in transit and/or while sitting at a dock site.

Although the invention has been described and illustrated with respect to a preferred embodiment thereof, it is to be understood that it is not to be so limited since changes and modifications may be made therein which are within the full intended scope of this invention.

I claim:

1. An electronic freight security system comprising means positioned at a first location for receiving radio frequency signals, means positioned at said first location for transmitting radio frequency signals, encoder means positioned at said first location for modulating said transmitting means with a first narrow band width predetermined fixed signal, means positioned at said first location for simultaneously triggering said transmitting and said encoder means, means positioned at a location remote from said first location for receiving radio frequency signals, means positioned at said remote location for transmitting radio signals, decoder means positioned at said remote location for responding to said first signal and for passing a narrow width of predetermined frequencies, means positioned at said remote location for amplifying said passed frequencies, encoder means positioned at said remote location for modulating said transmitting means at said remote location with a second narrow band width predetermined fixed signal having a frequency different from said first signal, means positioned at said remote location for discriminatively triggering simultaneously said transmitting means and said encoder means thus causing said remote transmitting means to operate only when said decoder means responds to a signal transmitted from said first location, decoder means positioned at said first location for passing a signal having a narrow width of predetermined frequencies, means positioned at said first location for amplifying the signal passed by said adjacent decoder means, indicator means positioned at said first location, and means positioned at said first location for causing said indicator means to be energized when said decoder means adjacent thereto responds to a signal transmitted from said remote location; said triggering means positioned at said first location includes activating means, a first relay responsive to said activating means, a resistor, a capacitor, said capacitor being charged when said first relay responds to said activating means and discharges through said resistor, a second relay for simultaneously energizing said encoding means and said transmitting means, and means for coupling said capacitor to said second relay to enable said second relay to be energized by the charge on said capacitor for a predetermined period of time as the charge on said capacitor discharges through said resistor.

2. The system of claim **1** in which said activating means includes a bellows actuated switching means, and an elongated resilient tubular member containing a captured quantity of fluid which is communicated with said switching means for displacing said bellows thereof when said resilient member is squeezably compressed so as to close said switching means.

3. An electronic freight security system for remotely monitoring the physical location of a plurality of freight packages while in transit or while at a dock site comprising means positioned at a first location for receiving radio frequency signals, means positioned at said first location for transmitting radio frequency signals, encoding means positioned at said frist location for modulating said transmitting means with a first narrow band width predetermined fixed audio signal, means positioned at said first location for simultaneously triggering said transmitting means and said encoder means, means positioned in a plurality of packages at a plurality of locations which are remote from said first location for receiving radio frequency signals, means positioned in each of said packages for transmitting radio signals, decoder means positioned in each of said packages for respectively responding to said first signal and for passing a narrow width of predetermined frequencies, means positioned in each of said packages for respectively amplifying said passed frequencies, encoder means positioned in each of said packages for respectively modulating said transmitting means with a plurality of audio signals of predetermined unique frequencies, means positioned in said packages for respectively triggering said transmitting means and said encoder means thus causing said corresponding transmitting means of said packages to operate only when said decoder means thereof individually responds to a signal transmitted from said first location, a plurality of decoder means positioned at said first location for respectively accepting a plurality of audio signals of predetermined unique frequencies, means positioned at said first location for respectively amplifying the signals passed by said adjacent corresponding decoder means, a plurality of indicator means positioned at said first location, and a plurality of means positioned at said first location for respectively causing said indicator means to be energized when said corresponding decoding means responds to a signal transmitted from said plurality of transmitting means in said packages; said triggering means positioned at said first location includes activating means, a first relay responsive to said activating means, a resistor, a capacitor, said capacitor being charged when said first relay responds to said activating means and discharges through said resistor, a second relay for simultaneously energizing said encoding means and said transmitting means, and means for coupling said capacitor to said second relay to enable said second relay to be energized by the charge on said capacitor for a predetermined period of time as the charge on said capacitor discharges through said resistor.

* * * * *