United States Patent [19]

Odenz et al.

[11] **3,772,645**

[45] **Nov. 13, 1973**

[54] **VEHICLE ALARM SYSTEM**

[75] Inventors: **Lawrence Odenz,** Costa Mesa; **Donald D. Kane,** Long Beach, both of Calif.

[73] Assignee: **T.P.S., Inc.,** Costa Mesa, Calif.

[22] Filed: **Jan. 20, 1972**

[21] Appl. No.: **219,229**

[52] **U.S. Cl.** **340/65,** 200/44, 200/61.52

[51] **Int. Cl.** **B60r 25/10**

[58] **Field of Search** ..... 340/63, 64, 65, ; 200/42 R, 44, 61.45, 61.52

[56] **References Cited**

UNITED STATES PATENTS

3,644,921	2/1972	Duggan et al.	200/61.45 R
3,670,301	6/1972	Douglas	340/65
2,947,830	8/1960	Goss	340/65 X

Primary Examiner—Alvin H. Waring

Attorney—Vernon D. Beehler et al.

[57] **ABSTRACT**

An alarm system for detecting movement of an object to which the alarm is attached when the object or the alarm is moved, having a power source which can be a battery, an audio signal means, a detection circuit and a gimbled trip or motion switch. The alarm system can be mounted on a device to be protected from theft and have an electrically conductive chain attached thereto which is connected into the detection circuit so that when the chain is broken the audio signal means will function.

The gimbled motion switch is positioned and connected to the detection circuit so that if it is moved, it will cause the detection circuit to function creating an alarm in the form of an audio signal.

The entire system can be mounted in a closed locked box which is attached to a valuable object which is to be protected such as a bicycle, business machine or storage box.

8 Claims, 11 Drawing Figures

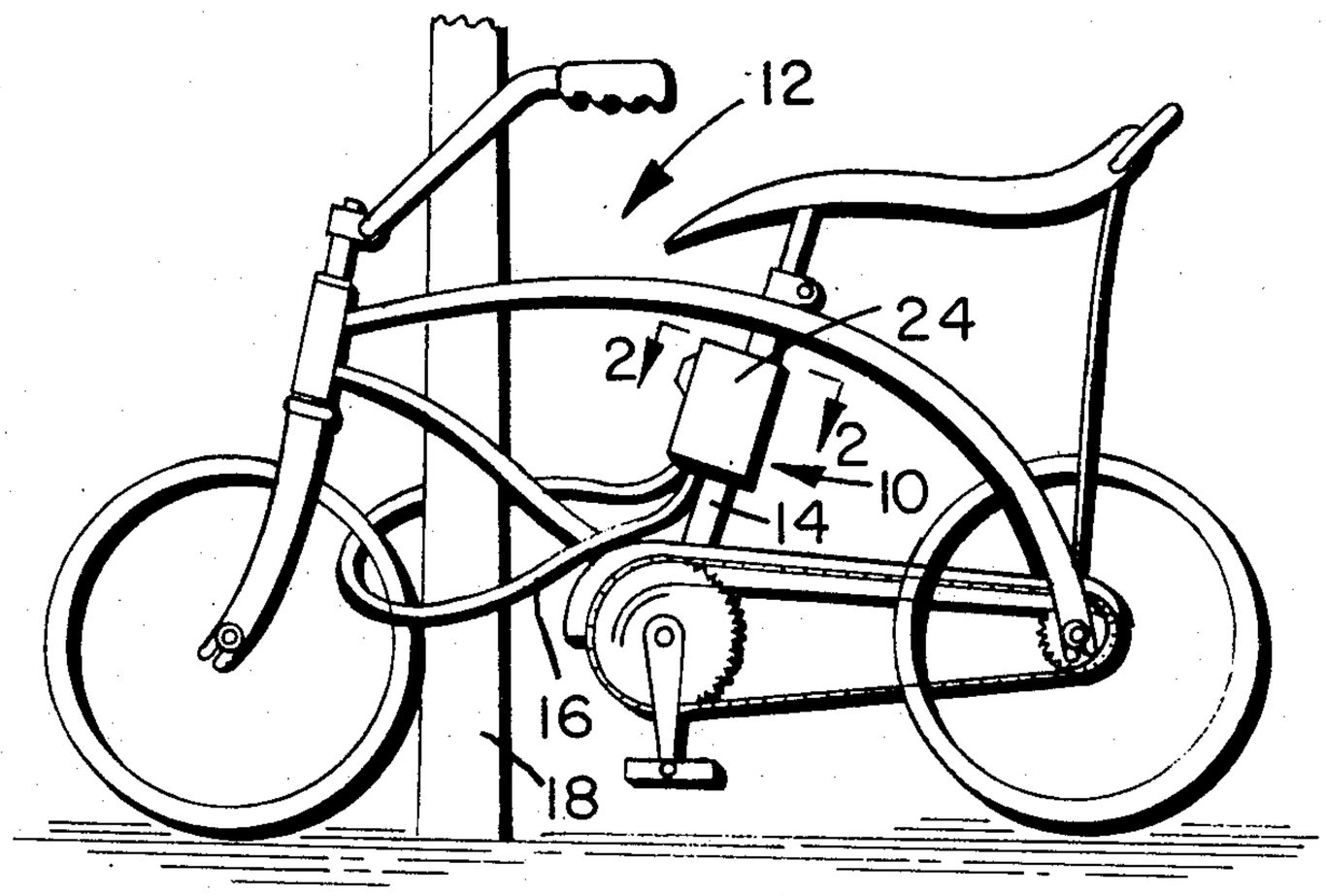

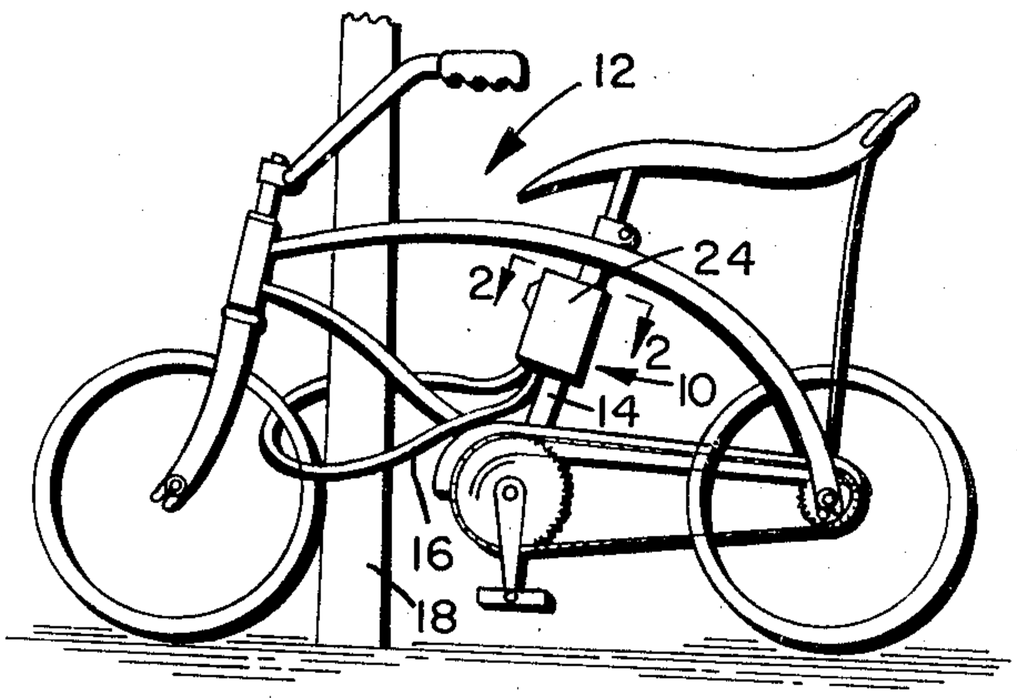

FIG. 1

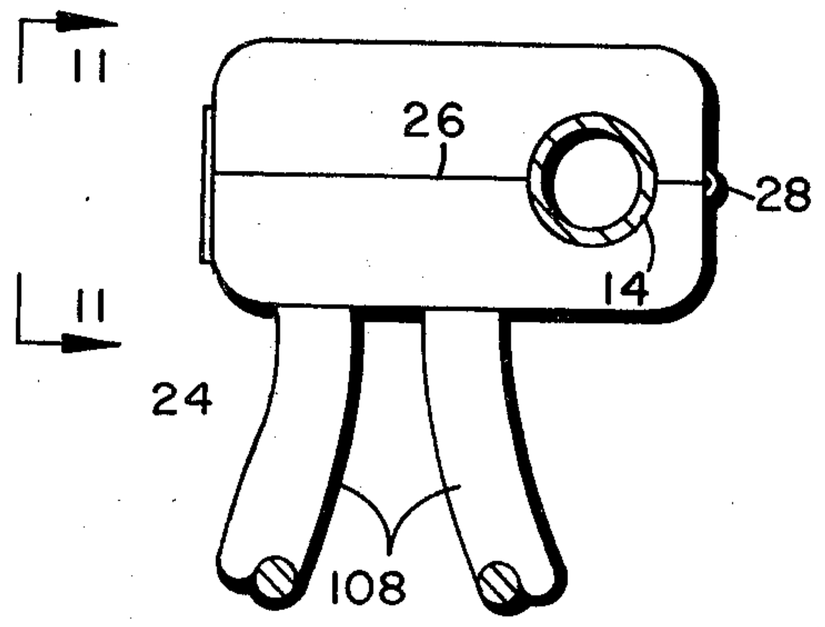

FIG. 2

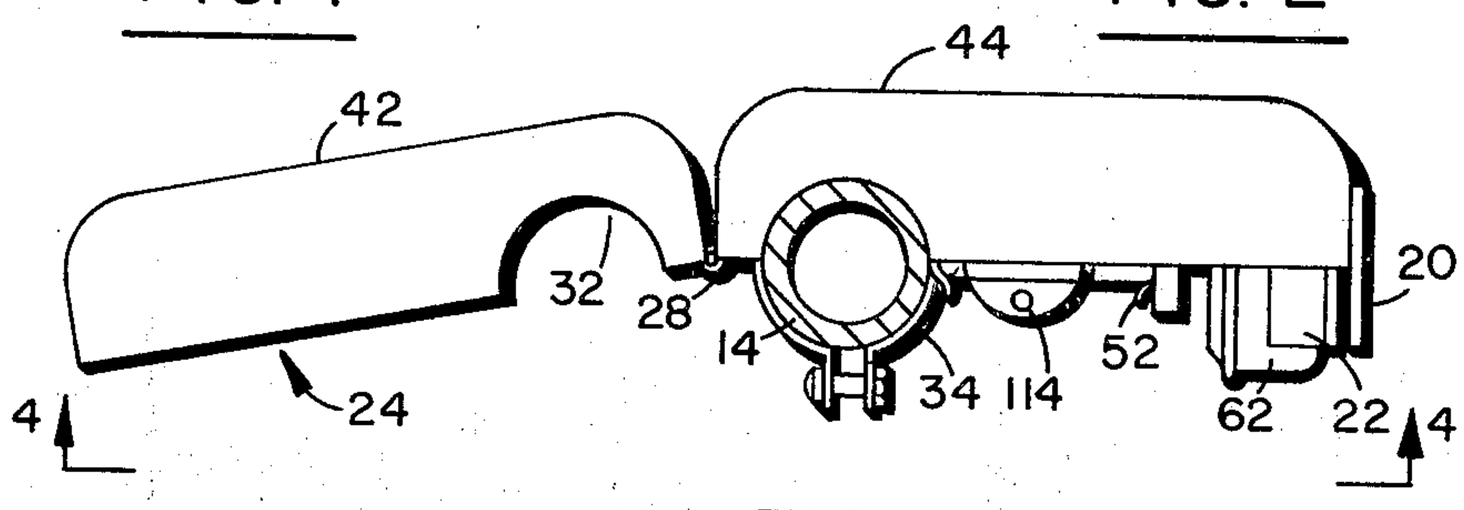

FIG. 3

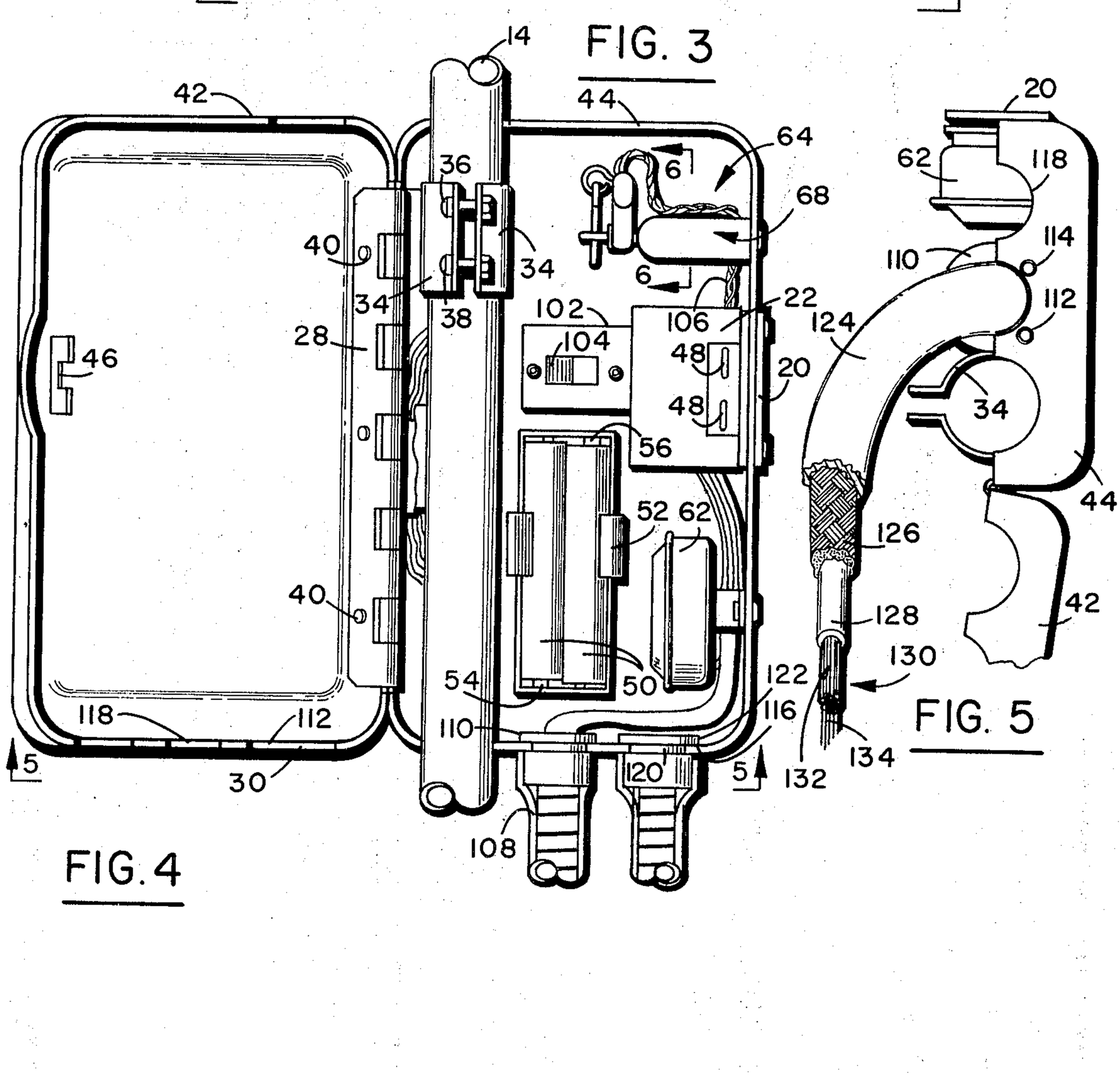

FIG. 4

FIG. 5

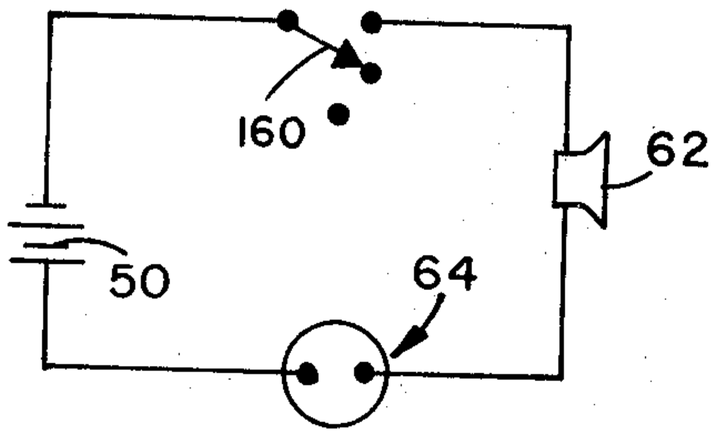

FIG. 7

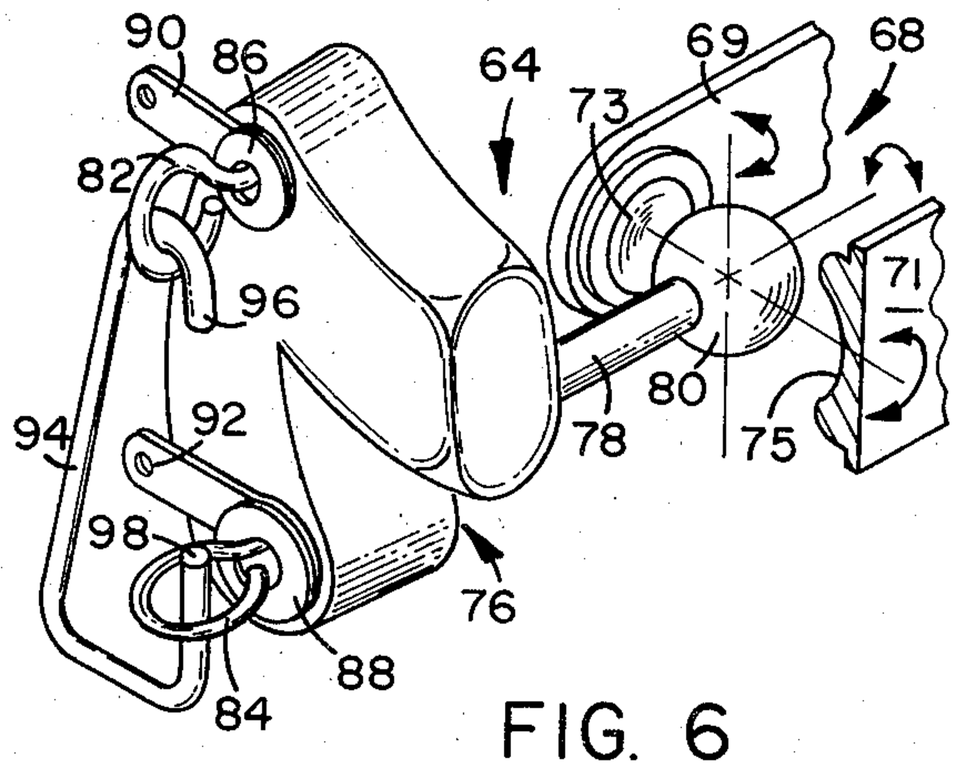

FIG. 6

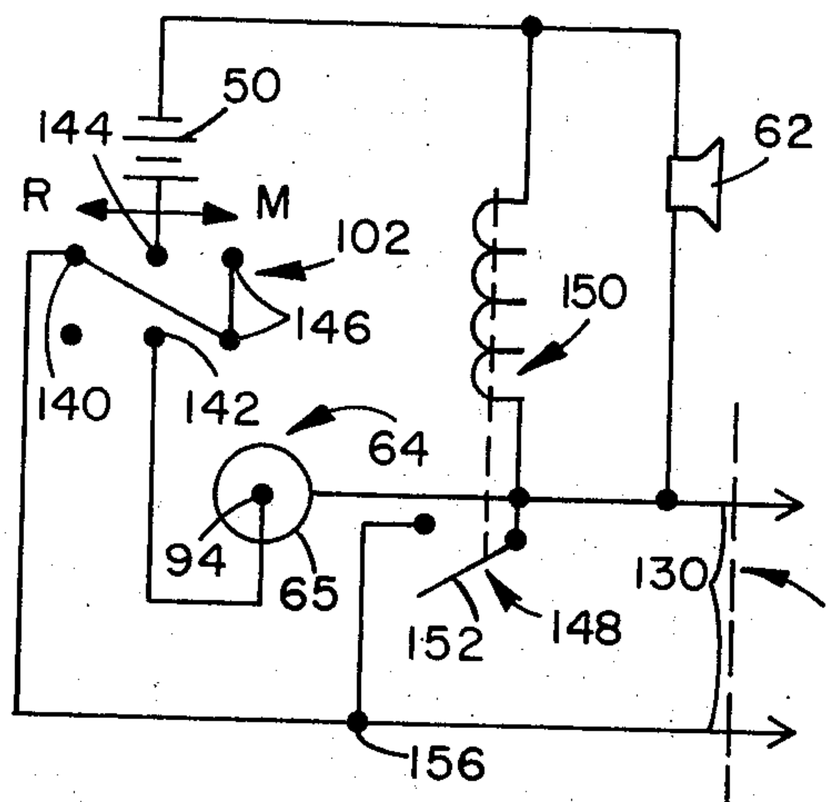

FIG. 8

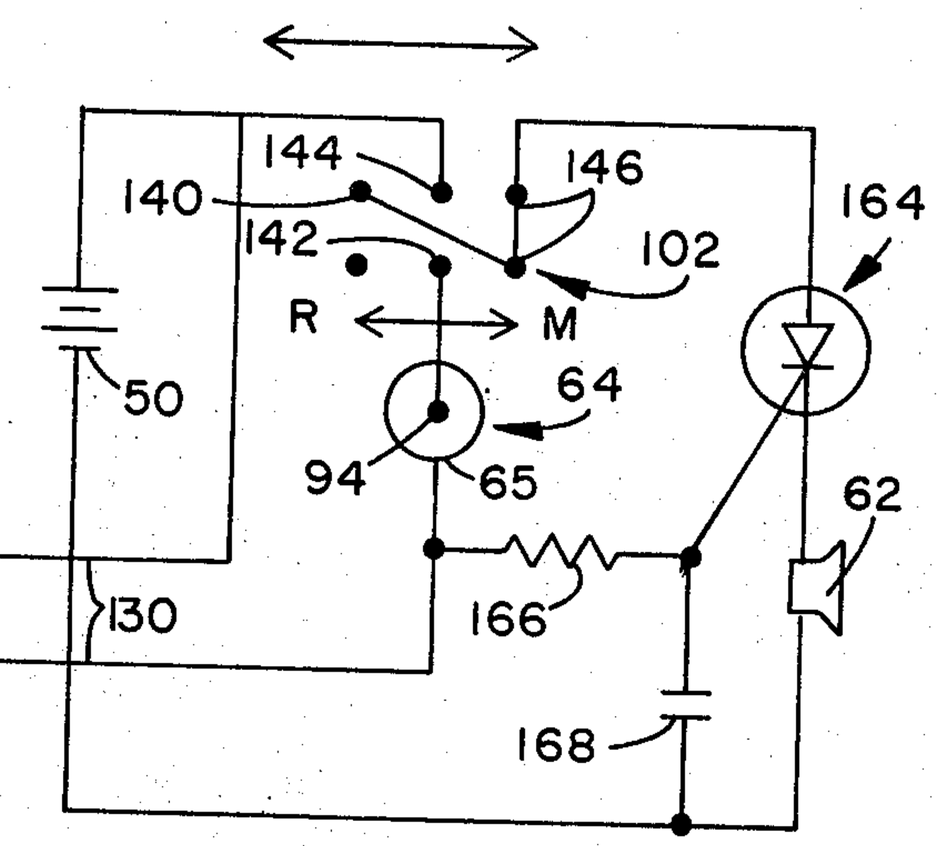

FIG. 9

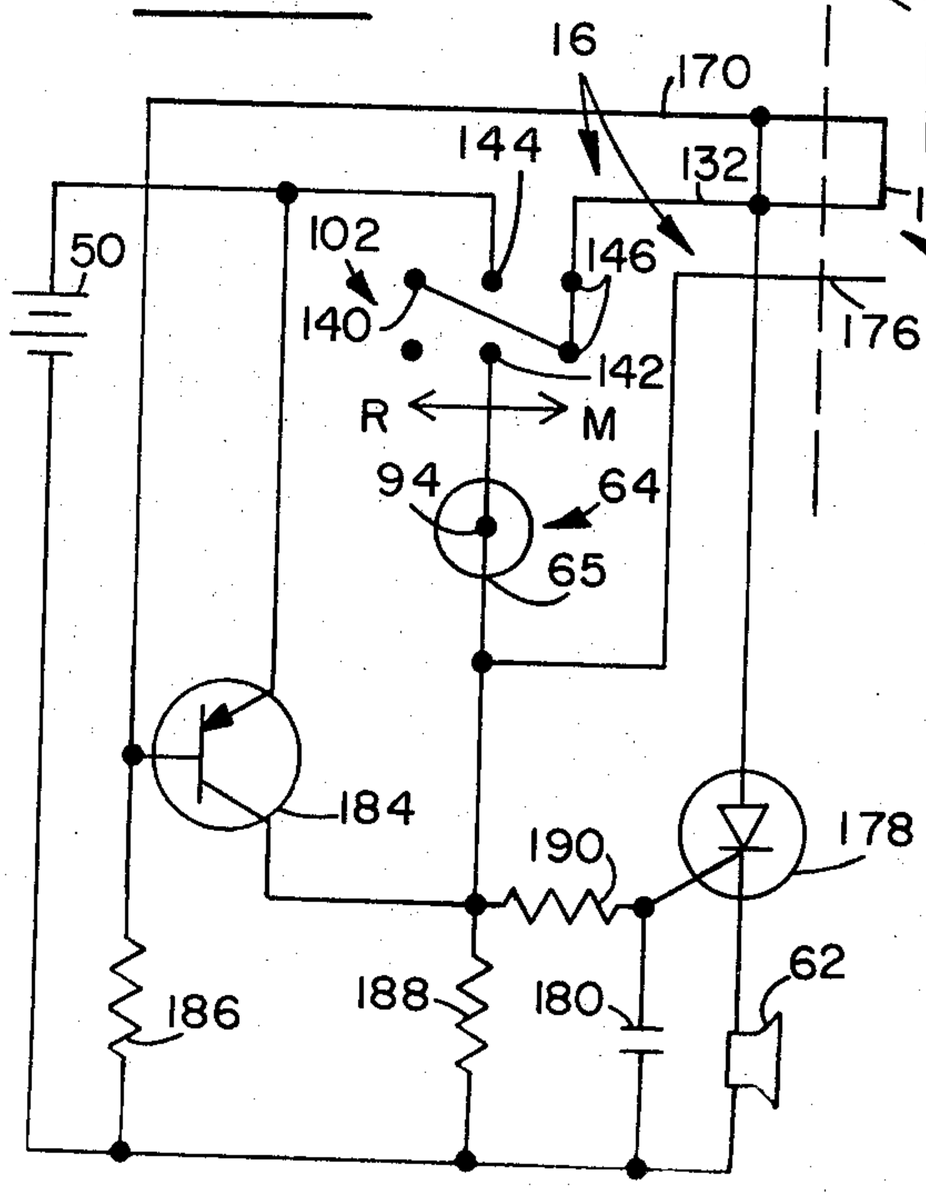

FIG. 10

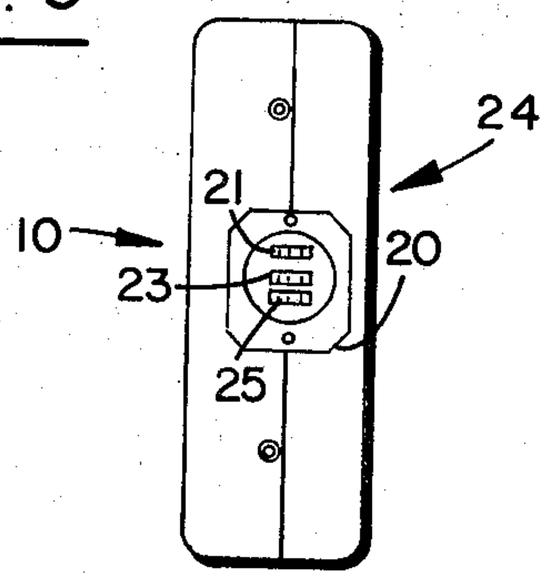

FIG. 11

VEHICLE ALARM SYSTEM

BACKGROUND OF THE INVENTION

1. Field of the Invention

The field of this invention lies within the alarm system art, particularly alarms which issue an audio signal when a piece of valuable equipment has been displaced or tampered with such as a bicycle.

2. The Prior Art

The prior art relating to theft alarm actuation generally incorporates the principle of breaking or creating a circuit in which an alarm is positioned. Specifically, alarm circuits often incorporate a wire within a window, a lock, or other suitable electrical coupling means. Also, alarms are oftentimes tripped by intrusion into an electro-magnetic field, a field of sound waves, or a field of light waves.

The foregoing alarm systems are most often placed in a stationary position. In other words, if a door is to be guarded against opening, the alarm is built into the structure surrounding the door and is caused to operate upon prying of the door or the door lock. When an alarm is used for a window, it is often placed within a circuit which is formed of a wire within the window. When the wire is broken by reason of the window being broken, the circuit is broken causing an alarm to issue. In cases where light sources and electromagnetic sources are utilized, it is usually necessary that an object break the close of the field.

In the foregoing, the alarms are basically static alarms which do not issue any alarm signal except in a given location. In other words, the building or vehicle must be broken into, or a fixed element thereof has to be moved.

The prior art does not provide for an alarm utilized as a system to detect movement with respect to a relatively protable and valuable object. This invention enables an alarm to be issued from a portable object when the object is moved in an unwarranted manner, to help prevent the theft thereof. The alarm can be specifically utilized with not only bicycles, but office equipment, valuable containers such as strong boxes, and other devices such as luggage and baggage.

The prior art specifically relating to light weight vehicles such as motorcycles and bicycles does not incorporate adequate alarms for warning when an unwarranted movement of the bicycles or motorcycles take place. In most cases, the only way of preventing the theft thereof is to chain them, lock them, or cut the ignition as in the case of motorcycles. However, in such instances the entire bike or motorcycle can be lifted onto a larger vehicle for purposes of removal and theft. Also, a lock or chain can be cut without any knowledge of those nearby. This particular device overcomes those deficiencies of the prior art by issuing an alarm when the motorcycle or a bicycle is removed or disturbed from the position in which it was originally placed.

It is well known that valuable equipment such as office equipment in the form of typewriters, dictating machines, and other portable equipment are oftentimes stolen. This invention creates an audible alarm if office equipment or other valuable objects are moved from their immediate location. Consequently, anyone moving valuable equipment not knowning that the alarm is set, will move it inadvertently and create an audio alarm. When such removal is unwarranted, the person will possibly be dissuaded from such removal, or caught in the act.

Thus, this invention overcomes the deficiencies of the prior art by creating an audio alarm system for protecting bicycles, motorcycles and all forms of portable and valuable equipment.

SUMMARY OF THE INVENTION

This invention comprises a portable alarm system affixed or attached to a valuable piece of equipment to provide an audio warning when such equipment is tampered with.

Specifically, this invention comprises a first embodiment having a built in power supply such as a battery to operate the audio alarm thereof, for attachment to a bicycle or motorcycle. The audio alarm is set by a control switch and caused to function by a gimbled motion switch. The gimbled motion switch is implaced within the detection circuit to operate the audio signal means so that when the initial orientation of the gimbled motion switch is affected, it will cause the detection circuit to be completed to operate the audio alarm. A lock is provided with a casing for the entire device to provide access thereto for setting the gimbled motion switch in an initial location. A conductive chain is also linked to the device so that if it is cut or damaged, it will cause the detection circuit to create an audio alarm as when the gimbled trip or motion switch completes the circuit.

Another embodiment incorporates an alarm type box which can be attached to or connected with a piece of portable equipment such as a typewriter, dictating machine, copying machine, or strongbox. In such an embodiment, the operation of the audio alarm is similar to the foregoing system. However, the chain can possible be eliminated so as to only incorporate a gimbled motion switch. Upon disorientation of the foregoing device, an alarm will sound. As an alternative, a trickle charger can be utilized to charge the static power supply or battery of the invention.

BRIEF DESCRIPTION OF THE DRAWINGS

The invention will be more clearly understood by reference to the description, taken in conjunction with the accompanying drawing wherein:

FIG. **1** shows an elevation view of the use of the alarm system of this invention with a bicycle;

FIG. **2** shows a top plan view of an embodiment of this invention along line **2—2** of FIG. **1**;

FIG. **3** shows a top plan view of the invention shown in FIGS. **1** and **2** in an open position;

FIG. **4** shows the invention along line **4—4** of FIG. **3** to indicate the side elevation view of the device when it is opened;

FIG. **5** shows a bottom view of the invention along line **5—5** of FIG. **4**;

FIG. **6** shows the gimbled trip or motion switch of this invention as seen along lines **6—6** of FIG. **4**;

FIG. **7** shows a schematic electrical form of an audio alarm system incorporated in this invention;

FIG. **8** shows a schematic electrical form of the the embodiment of this invention;

FIG. **9** shows an electrical schematic form of an alternative embodiment of this invention;

FIG. **10** shows a schematic electrical form of an embodiment of this invention; and,

FIG. 11 is an edge view of this invention along line 11—11 of FIG. 2.

DESCRIPTION OF THE PREFERRED EMBODIMENTS

Looking at FIG. 1, the alarm system 20 for use with a bicycle or motorcycle is shown attached to a bicycle 12 by connection to and around a vertical post 14 of the bicycle. The vertical post 14 is usually a part of most bicycles for purposes of providing general rigidity to the frame of the bicycle. Extending from the alarm system 10 is a chain 16 which is wrapped around a post 18. As can be seen from the showing of FIG. 1 and the other figures, a protuberance formed as a lock dial holder 20 is shown. The lock dial holder 20 is for purposes of operating a combination lock 22. The lock dial holder 20 has three dials 21, 23, and 25 therein for suitable rotation and operation of the lock 22.

The audio alarm system 10 has a box or cover 24 which is divided at a midline 26 and hinged by a hinge 28 in order to provide access to the interior of the box. As can be seen in FIG. 2, the center bar 14 or vertical post of a byicycle is shown through the midsection of the audio alarm 10. The vertical post 14 is located interiorly of the alarm box 24 by virtue of passing through openings 30 and 32 at the respective bottom and top of the case or box 24. Interiorly of the box 24 is a clamp 34 attahced thereto having two bolts 36 and 38 for securing the clamp in a tightened manner around the post 14. In other words, the clamp 34 is opened when the box 24 is secured to a bicycle and the center post 14 is passed thereinto. The bolts 36 and 38 are then secured in a tight manner so that the box 24 cannot pass over or slide up and down on the bar 14.

As can be seen from the interior of the box 24 specifically shown in FIGS. 3, 4 and 5, the hinge 28 extends along a substantial length of the box 24. The hinge 28 can be affixed to the box in a suitable manner such as by rivets 40 which are shown holding the hinge to the box.

The box 24 comprises a cover 42 and a base 44. The cover 42 is mounted so that it provides access to the inside of the box 24 by hinging over the base portion of the box 44. Interiorly of the cover 42 is a latch 46 referred to as a striker in the lock art, which is secured to the combination lock 22 by the openings 48 thereof. Thus, when the cover 42 is emplaced and secured to the base 44, the latch 46 snugly fits into and is held by the combination lock 22 through the openings 48.

The base has a substantial portion of the electrically operative elements of this invention mounted therein. The electrically operative elements generally comprise batteries 50 or a suitable power source. The batteries 50 are held to the base by a clamp 52 which tends to hold the batteries in situ through frictional engagement thereof. The batteries 50 are provided with contacts, two of which, namely contacts 54 and 56, hold the batteries in tight electrical contact. The batteries are connected to the remainder of the circuit through appropriate lines. The lines are such that they connect the circuit in a manner to be described and as seen in the schematic view 8 which will be described later. The other electrical schematic configurations can be utilized with the same physical apparatus and have the advantages described with respect to each configuration shown in FIGS. 9 and 10.

An audio alarm 62 is provided for purposes of sounding an alarm when the detection circuit is actuated. In order to cause the actuation of the audio alarm 62, a gimbled motion or trip switch generally shown at 64 is connected to the base 44 of the box 24 at a motion switch holder 68 comprising clamps 69 and 71 which have ball sockets 73 and 75.

The motion switch 64 is provided with a dielectric support 76 in the general shape of an inverted L. The dielectric support 76 is curved and can be made of a plastic material and molded to receive a support pin 78 having a ball 80 attached to the end thereof. The ball 80 seats within the socket seats 73 and 75 which suitably clamp and accommodate the ball 80 by means of pressure exerted from the arms 69 and 71 of a motion switch retention means 68.

The dielectric support 76 has a pair of eyelets 82 and 84 which are seated and can be molded within the dielectric material 76. The eyelets have contact washers 86 and 88 respectively associated with each eyelet. The contact washers in trun are connected to soldering points or lugs 90 and 92 from which the wires detailed in the schematic electrical views are connected and through which an electrical circuit can be completed. The eyelets 82 and 84 serve to connect a hanging contact 94 which is looped through eyelet 82 by a bend 96 and projects upwardly through eyelet 84 with an upward extension 98.

The motion switch 64 can be oriented so that when the upward projection 98 is out of contact with the eyelet 84, there will be no contact between the electrical connections 92 and 90. When the initial placement of the motion switch 64 is disoriented with respect to the support means 68 which is attached to the box 24, the upward projection 98 makes contact against the loop 84 and completes an electrical circuit from contacts 92 to 90.

The motion switch 64 is connected through a double pole double throw switch 102 which has an operating tab 104. The double pole double throw switch is shown schematically in FIG. 8 and operates the circuit by means of being connected to the motion switch by wires 106 and to the remainder of the circuit for operation thereof.

A locking cable or chain 16 which was shown in FIG. 1 is comprised of a cable section 108 and an end cap portion 110 which is seated within the box 24 within a rounded opening or an identation motion The end cap 110 can be riveted by rivets 114 which secure the end cap 110 into the base of the box 44.

The cable 108 terminates in a seating cap 116 which is seated within an indentation or rounded opening 118 of the base 44 of the box 24. The seating cap 116 is of a rounded disc shaped design having a groove 120 circumferentially surrounding the upper portion of the cap 122 so that the groove 120 can be seated against the rounded interior surface of the circumferential opening 118.

Thus, when the cable is to be locked into the box, the seating cap 116 is slid into the base 44 of the box 24 so that the circumferential groove 120 mates with the edge of the opening 118. The top of the box 42 is then closed over the base 44 so that the opening 118 has its interior circumference seated against and within the groove 120. In this manner, the chain or cable 16 can be mechanically locked within the box.

The chain **108** is comprised of a vinyl or other suitable outer cover **124** and has steel flexible tubing **126** interiorly located thereof. The steel tubing **126** is such that it provides a certain degree of armor or protection against one attempting to cut the chain **16.** Interiorly of the flexible steel tubing **126** is a protective tubular layer **128** surrounding a series of electrical wires **130** each comprising an insulated wire **132** having a conductor **134** therein. The wires are specifically part of the operative features of the detection circuit of this invention, and will be described in greater detail with respect to the schematic views of FIGS. **7** through **10.** The cable **108** is basically a locking cable to prevent physical removal of a bicycle or object to be protected, as well as warning when the cable is cut, broken or crimped badly.

DESCRIPTION OF THE ELECTRICAL CIRCUIT

Looking at FIG. **8,** a schematic view is shown wherein a power source or EMF is provided. The EMF is that of the battery **50.** The battery is connected to a junction point **144** of the switch **102** so that the switch **102** can cause conduction of current through the remainder of the circuit. The switching tab **104** and switch **102** are connected and configured so that the switch effectively causes contact of the poles in a double pole double throw relationship. Specifically, switch **102** has poles and contacts which go from a reset position R to a motion position M as indicated by the arrow. A set of contacts **140, 142, 144** and **146** allow a break and make situation to reset a relay that will be more fully described.

The motiron switch **64** is shown schematically having a rounded configuration or circle which is analagous to the eyelet **84.** The interior contact point is analagous to the arm **94.** The switch can be connected and operate such that it makes contact from arm **94** to eyelet **82** which are represented by the outer circle **65** of the schematic configuration of the motion switch **64.**

The audio warning device **62** is basically a buzzer that can function mechanically or electrically to provide a certain tone when it is actuated. A relay switch **148** is shown having a coil **150** and a switch arm **152.** The relay switch is shown across a set of junction points or terminals which are placed across the wires **130** of the cable **108.**

The motion switch **64** is connected by the reset position R and between terminals **144** and **156.** The chain **108** is also connected to terminal **156.**

The relay **148** can be a reed switch of a single pole configuration which is activated by the source of EMF.

The physical configuration of the cable or chain **108** within the circuit system is such that the cable will always serve to operate the alarm when the wires **130** are shorted. Shorting of the wires, of course, can take place by breaking the outer insulation **132** of the wires **130** such that the conductors **134** come in contact with each other. More specifically, when the chain or cable **108** is broken or cut by any sort of conductive metallic material such as a wire cutter, snipper, or a pair of pliers, the conductors **134** are shorted. Thus, even though the device is not in a mode which will allow the motion switch **64** to operate, it can still effectively monitor any theft when the cable **108** is cut.

The R position resets the reed relay **148** by dropping its reed back into an operative position. This is done by utilizing the break before make configuration of the switch **102** before the switch wiper is pushed all the way over to terminals **146.** In other words, when the switch from the reset position is pushed over to the make position M, it resets the reed relay through the break before make configuration of the double pole double throw switch.

ALTERNATIVE CIRCUIT CONFIGURATIONS

Basic Configuration

The simplest circuit configuration of this device incorporates the showing of FIG. **7.** The showing of FIG. **7** is of a battery or power source **50** connected to a motion switch **64** and an audio alarm **62.** A switch **160** is shown which can be utilized to turn the system on and off. The switch **160** permits the disengagement of the motion switch **64** after the arm **94** has made contact with the eyelet **84.** Furthermore, while the motion switch **64** is being situated by movement within the supporting elements **71** and **69,** the switch can be placed in an off position so that it does not actuate the audio alarm **62.**

The foregoing configuration of FIG. **7** is specifically useful for devices to be protected such as expensive office equipment and portable strongboxes. In this mode, the device can be internally or externally attached out of view, or in such a manner that it cannot be taken from the equipment to be protected. Once the motion switch **64** is set so that the upright extension **98** is out of contact with the eyelet **84,** it can be placed in a position to further monitor any future movement of the device. Upon movement, of course, the motion switch arm **94** will contact the eyelet **84** with the upright **98** thereby completing the circuit between electrical connections **90** and **92** so that the audio alarm **62** will operate.

Solid State Configuration

Looking more specifically at FIG. **9,** a source of EMF **50** is shown. A chain or cable configuration having conductors **130** is also shown connected to a motion switch **64** and a double pole double throw switch **102.** The reset R and motion M configuration is basically the same as FIG. **8** wherein the switch **102** can be moved from a break before make position. Of course, the switch moves across the terminals **144** and **142** in an analagous manner as they did of FIG. **8.** The motion switch **64** is connected in a like manner except for the fact that in lieu of a reed relay or relay switch **148,** an SCR (silicone controlled rectifier) **164** is provided. Current to the gate of the SCR is limited by means of a current limiting resistor **166.** A capacitor **168** is also provided in order to provide stability.

The audio alarm **62** is shown connected from the SCR in a manner whereby it will operate when the SCR is forwardly biased to allow current to flow to the audio alarm. This is accomplished by the motion switch **64** completing an electrical circuit though its connections **90** and **92.**

Combination Chain Circuit

FIG. **10** shows a double pole double throw switch **102** having a reset R and motion M configuration analagous to the former descriptions of the same switch in FIGS. **8** and **9.** The switch **102** has terminals **140, 142, 144** and **146** and goes from the reset and make position with the break before make configuration as previously described.

The chain or cable **16** is configured so that a series of conductors like those of the conductors **130** are pro-

vided within the cable. However, some of the conductors **130** are looped as in the case of conductor **170** and **132** which are looped at point **174.** Furthermore, additional conductors are provided such as conductor **176** which is not connected or looped in the manner of loop **174.** The conductors **176** are laterally placed alongside the conductors **170** and **132,** and function in the manner to be described.

A source of EMF such as battery **50** is provided. The motion switch **64** which has the configuration shown in FIG. **6** makes contact to cause a flow of current through contacts **90** and **92.** This is shown schematically by the loop **65** and inner point **94** which are analagous to the eyelet and the upstanding extension **98.**

The alternative embodiment of FIG. **10** is also provided with an audio alarm **62** and an SCR **178.** A capacitor **180** is provided for purposes of stability in the same manner as the capacitor **168.**

A transistor **184** is shown having a PNP configuration. The transistor **184** is biased by Resistor **186,** when loop **174** is cut. A resistor **188** is utilized to bias the collector of the transistor. Resistor **190** is utilized to provide a current limiting function in the same manner as the current limiting resistor **166.**

In this particular configuration, when the conductors **170** and **132** are broken or interrupted, the audio alarm **62** will be turned on. Furthermore, when conductors **176** are shorted with conductors **170** and **132,** the alarm will be turned on. In effect, when the loop **174** is cut, the transistor **184** is negatively biased as a PNP transistor would be, to cause current to flow through the SCR **178.** By shorting the conductors **176** with conductors **170** or **132,** the transistor is eliminated in the circuit and effectively bypassed to cause the SCR **178** to be forwardly biased and again operate the audio alarm **62.**

Operation of the Invention

One utilizing the embodiment of FIGS. **1** through **6** and **8** for purposes of a vehicle lock firstly opens the box **24** by means of the combination lock **22.** Upon opening the box **24,** the switch **102** is switched to a reset mode by pushing tab **104** to the reset position. The motion switch **64** is then oriented so that the upper extension **98** is not in contact with the eyelet **84.** The switch **102** is then moved to the motion position M. The box is then closed and locked with the seating cap **116** implaced within the rounded opening **118.** It is preferable to have the cable **16** looped around a solid object prior to seating of the seating cap **116** within the opening **118.** After the box **24** has been closed thereby locking seating cap **116** into the box, and the motion switch **64** has been set, the operator or the owner of the vehicle can then leave.

When the cable **16** is either cut or disturbed substantially so as to short the conductors **130,** the audio alarm **62** will emanate a warning sound.

When the bicycle as seen in FIG. **1** or for that matter, any device or equipment to which the box **10** is attached is disoriented, the motion switch **64** will cause a flow of current. As can be appreciated, when the motion switch **64** is disturbed or disoriented from its initial position, arm **94** will cause the upright **98** to contact the loop **84.** The contact of the loop **84** will then complete a circuit between electrical contacts **92** and **90** thereby causing the audio alarm **62** to operate.

In like manner, when the circuits of FIGS. **7, 9** and **10** are utilized the audio alarm **62** will also function when the motion switch **64** is disoriented from its initial position. As can be seen, the motion switch **64** and cable **16** will provide safety from theft in combination with each other.

It should be understood that the invention can be utilized not only with any form of portable equipment, but can also be utilized with the motion switch or the cable singularly or in combination. Additional embodiments can also incorporate a trickle charger to keep the battery **50** or other source of EMF in a ready state. As a consequence, this invention has broad scope beyond the foregoing teachings and is only to be read and construed in light of the following claims.

We claim:

1. A portable alarm comprising:
a power supply;
an audio signal means;
a motion switch which is supported for operative orientation so that upon physical displacement of said motion switch, it will make electrical contact for operating said audio signal means;
a conductive cable;
a plurality of conductors within said cable connected to said audio signal means;
electrical means for connecting said motion switch and said cable to said power supply and said audio signal means for purposes of causing said audio signal means to issue an audio signal upon said motion switch making contact after disorientation or said conductors of said cable making contact or being cut; and,
a container in which the foregoing elements are mounted.

2. A alarm as claimed in claim **1** wherein said container comprises:
a hinged box;
means to mechanically link said conductive cable to said box;
a lock for maintaining said box in locked relationship; and,
means attached to said box for holding said box on a device to be protected.

3. The audio alarm system as claimed in claim **1** further comprising:
switch means for causing a cutout of the motion switch.

4. A portable alarm system for affixing to a moveable object comprising:
a container;
a battery mounted within said container;
electrical audio signal means within said container;
a lock for closing said container;
means for affixing said container to a piece of equipment to be protected by said alarm;
a motion switch within said container for linking said audio signal means to the battery within said container for operating said audio signal means;
a switch for disconnecting said motion switch from said audio signal means;
an electrical cable having a looped conductor for connecting said audio alarm means and said battery when the conductor is cut; and,
means for creating an audio signal when said motion switch is disoriented or said looped conductor is cut.

5. An alarm as claimed in claim **4** wherein:
said means for creating an audio signal when said mo-

tion switch is disoriented comprises an SCR; and, means are provided for forwardly biasing said SCR so that when said motion switch is making contact, it will cause said forward biasing means to cause current to flow through said SCR.

6. An alarm as claimed in claim **5** further comprising:

a current limiting resistor to the gate of said SCR; and

a capacitor for stability within said circuit.

7. An alarm as claimed in claim **4** wherein said cable further comprises:

second electrical conductors; and

means to cause said audio signal means to issue a signal when said second conductors make contact.

8. The alarm as claimed in claim **4** further comprising:

a transistor connected to the looped conductor; and,

an SCR connected to said looped conductor and the collector of said transistor at the gate of said SCR.

* * * * *