United States Patent [19]

Schoelles

[11] **3,772,638**

[45] **Nov. 13, 1973**

[54] **WIRE CONNECTOR**

[75] Inventor: **Harold J. Schoelles,** Framingham, Mass.

[73] Assignee: **Ark-Les Switch Corporation,** Watertown, Mass.

[22] Filed: **July 13, 1972**

[21] Appl. No.: **271,285**

[52] **U.S. Cl.**..... **339/198 R,** 339/220 R, 339/250, 339/276 R

[51] **Int. Cl.**..... **H01r 9/00**

[58] **Field of Search** ..... 339/198 R, 198 C, 339/198 E, 198 G, 198 GA, 198 H, 198 J, 198 K, 198 S, 198 P, 95 R, 95 D, 96, 97 R, 97 C, 97 P, 220 R, 220 A, 220 C, 220 L, 220 T, 248, 250, 223 R, 276 R, 276 A, 276 C, 276 D, 276 E, 276 F, 276 R, 276 S, 276 T, 277 R, 277 C; 24/115 A, 123 W, 129 W, 265 A

[56] **References Cited**

UNITED STATES PATENTS

2,583,530	1/1952	Hasselbohm	339/95 R
3,702,456	11/1972	Patton	339/198 H
3,629,811	12/1971	Deutsch	339/276 R
1,706,412	3/1929	Roberts	339/276 R X

Primary Examiner—Marvin A. Champion
Assistant Examiner—Robert A. Hafer
Attorney—Martin Kirkpatrick

[57] **ABSTRACT**

A terminal assembly comprising a terminal board of flat sheet insulating material with a plurality of metallic electric wire connectors mounted thereon having on one pair of opposite sides a pair of spaced, opposed, generally flat clamping tabs and on the other pair of opposite sides a pair of side extensions interconnected to provide an end extension including an electrical connecting member. The tabs each have at least one wire receiving aperture closely adjacent the base which has a portion extending between the apertures in opposite tabs. The apertures in opposite tabs are aligned with one another for the insertion of a wire thereinto to be gripped and clamped between the tabs and the base portion upon bending of the tabs toward one another into substantial parallelism with the base portion.

8 Claims, 6 Drawing Figures

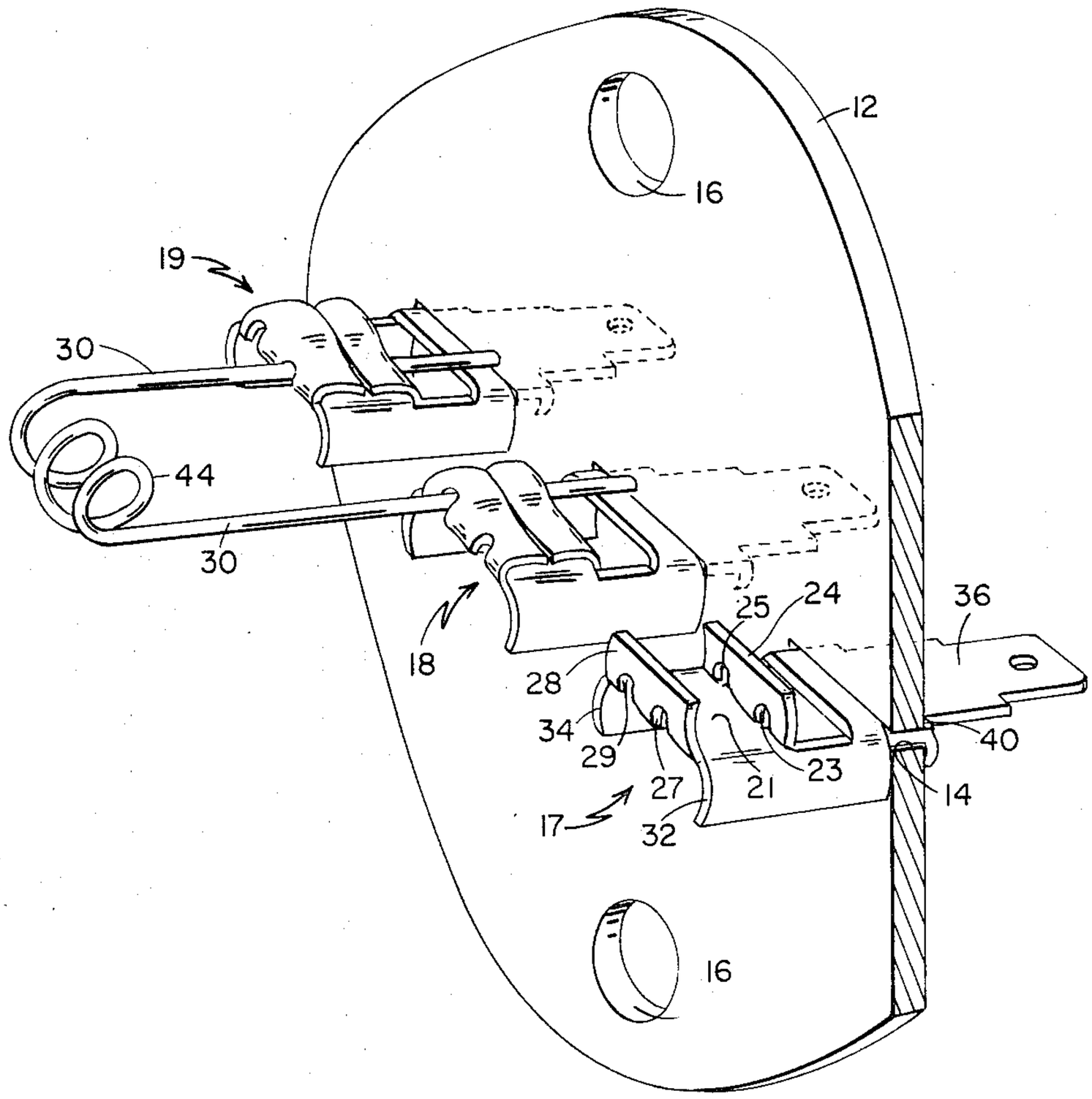

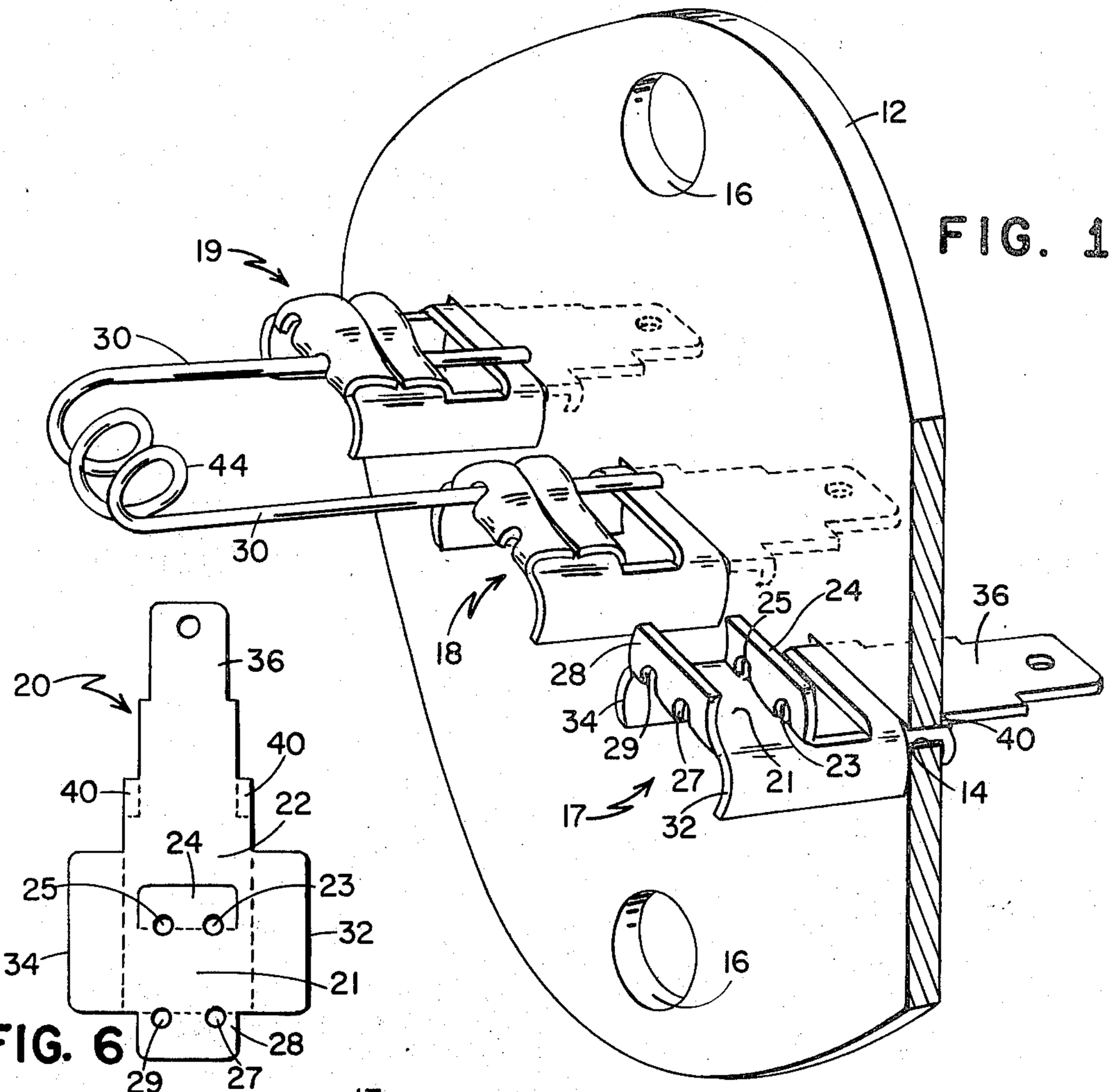

FIG. 1

FIG. 6

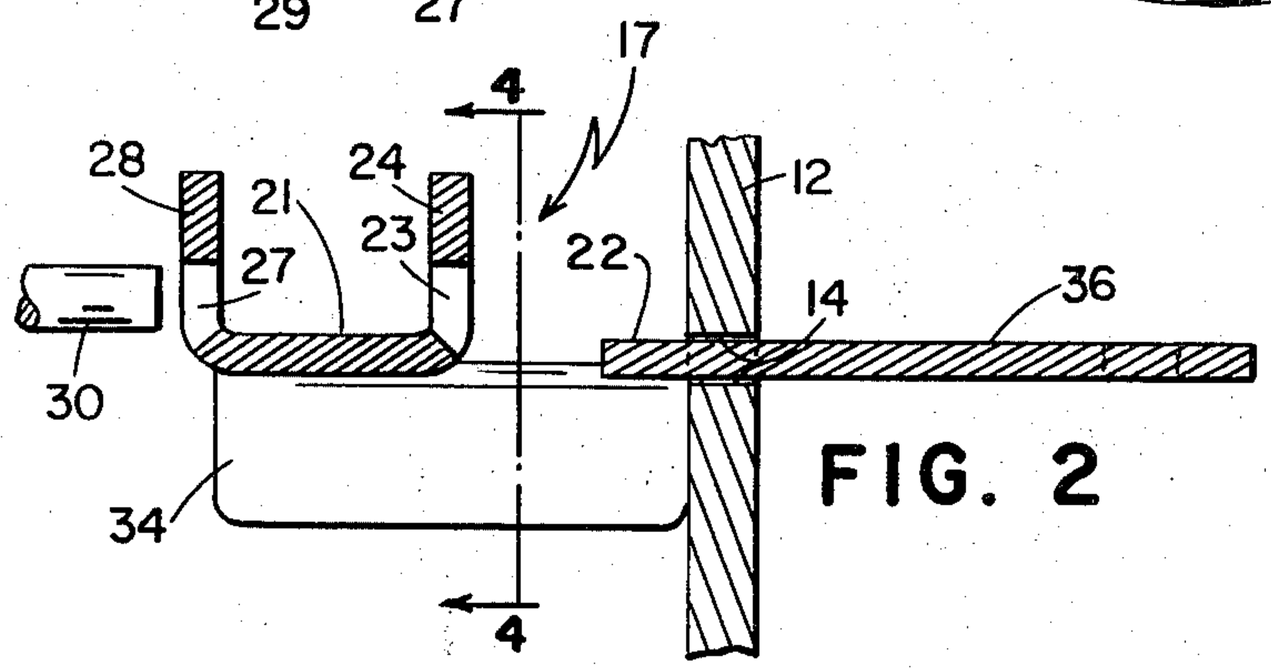

FIG. 2

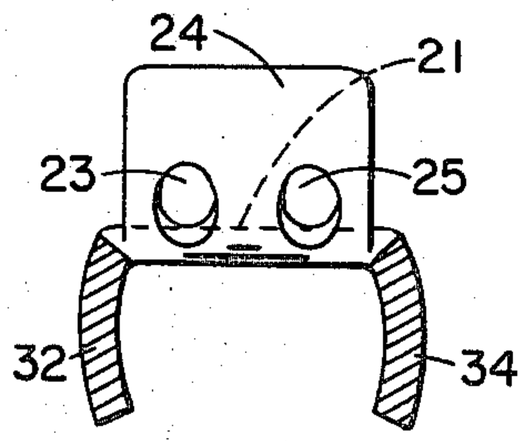

FIG. 4

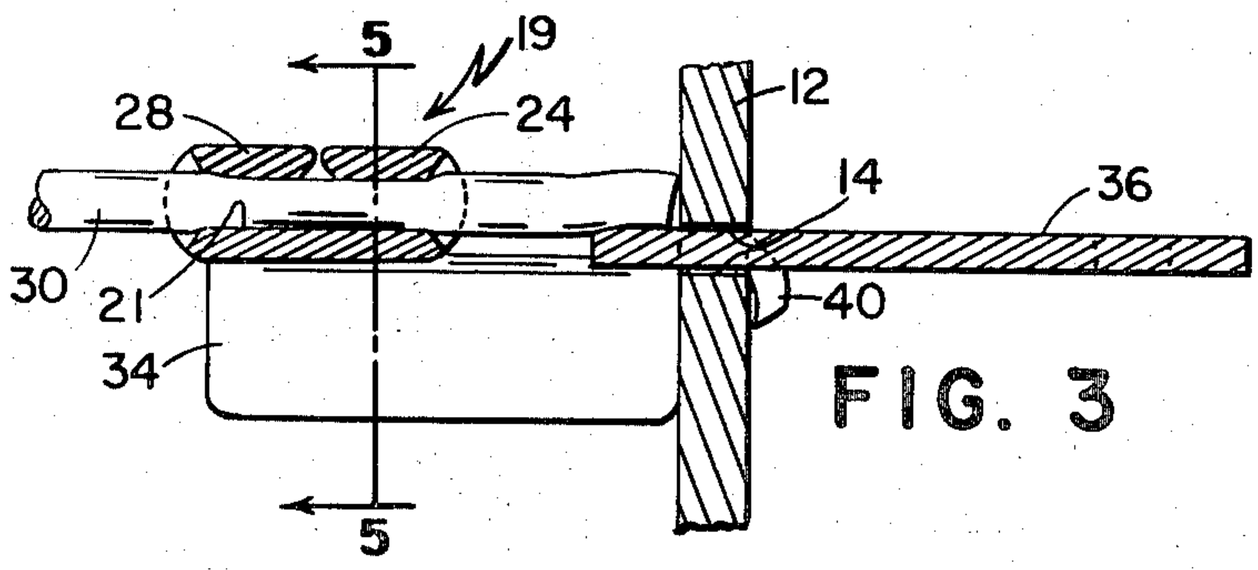

FIG. 3

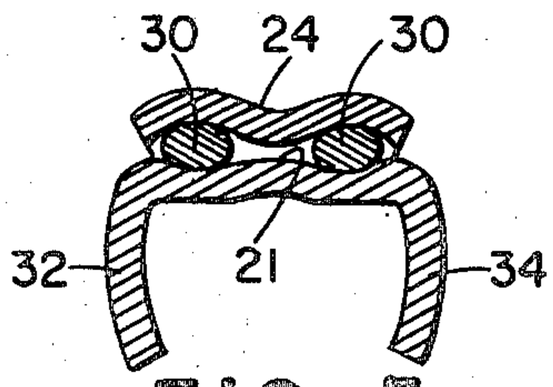

FIG. 5

WIRE CONNECTOR

This invention relates to electric wire connectors and terminal assemblies thereof.

The provision of satisfactory electric wire connectors and assemblies thereof has been a problem especially in connection with the mounting of bare resistance wire elements. This is due to the intermittent heating and cooling of such elements, with its resulting expansion and contraction, tending to loosen the elements with respect to their connectors, producing an unreliable electrical connection therebetween.

Accordingly, it is a major object of the present invention to remedy this deficiency in a practical and economical manner.

This is accomplished in the present invention by providing an electric wire connector, formed of readily bendable sheet metal, comprising a flat base having bent, preferably perpendicularly, out of the plane thereof on one pair of opposite sides a pair of spaced, opposed, generally flat clamping tabs each having at least one and preferably at least two wire receiving apertures closely adjacent to the base, with the base having a portion extending between the apertures in opposite tabs. The apertures in opposite tabs are positioned with respect to one another for the insertion of a wire thereinto to be gripped and clamped between the tabs and the base portion upon bending of the tabs toward one another into substantial parallelism with the base portion. Preferably, the base has side extensions at the sides thereof between the tabs bent perpendicularly out of the plane of the base on the side thereof opposite the tabs, said side extensions extending beyond at least one and preferably both of the tabs in a direction perpendicular thereto and being interconnected in the plane of the base to provide an end extension which is provided with terminal board mounting means for mounting the connector on a terminal board of flat sheet insulating material having a plurality of slots therein, extending in a plane parallel to the tabs. Preferably, too, the end extension includes an electrical connecting member extending beyond the terminal board mounting means.

For the purpose of more fully explaining further objects and features of the invention, reference is now made to the following detailed description of a preferred embodiment thereof, together with the accompanying drawings, wherein:

FIG. **1** is an isometric view, partly in section, showing a terminal assembly including a plurality of the wire connectors of the invention;

FIGS. **2** and **3** are, respectively, side sectional views of a wire connector of FIG. **1** in open and clamped positions;

FIGS. **4** and **5** are, respectively, cross sectional views of the wire connectors of FIGS. **2** and **3**; and

FIG. **6** is a projected view of a wire connector of FIG. **1**.

Referring to the drawings, in FIG. **1** is illustrated a terminal assembly comprising a terminal board **12** of flat sheet insulating material having a plurality of slots **14** therein and a plurality of electric wire connectors **17, 18** and **19** mounted on said board and extending through said slots. Board **12** is also provided with two holes **16** for attaching it to a suitable mounting structure.

According to the invention, connectors **17, 18** and **19** are formed from flat stock of readily bendable sheet metal and are shown in projected, unbent configuration **20** in FIG. **6.** Each such connector has a flat base **22** having bent perpendicularly out of the plane thereof on one side thereof a pair of spaced, opposed, generally flat clamping tabs **24, 28** and on the opposite side thereof a pair of side extensions **32, 34** at the sides thereof between said clamping tabs.

The side extensions **32, 34** extend beyond clamping tab **24** in a direction perpendicular thereto and are interconnected in the plane of base **22** to provide an end extension including an electrical connecting member **36** extending through slots **14.** The end extension has mounting tabs **40** for mounting connectors **17, 18** and **19** on terminal board **12** with their connecting members on one side of said terminal board and the remainder of said connector on the opposite side of said terminal board.

Clamping tabs **24, 28** each have a pair of wire receiving apertures closely adjacent to the plane of base **22** generally tangential thereto, apertures **23** and **25** in tab **24** and apertures **27** and **29** in tab **28,** with said base having a portion **21** extending between apertures in opposite tabs. Furthermore, the apertures in opposite tabs, for example aperture **27** in tab **28** and aperture **23** in tab **24,** are aligned with one another for the insertion of a wire **30** (FIGS. **2** and **4**) thereinto to be gripped and clamped between said tabs and base portion **21** upon bending of said tabs toward one another into substantial parallelism with said base portion (FIGS. **3** and **5**), as shown with respect to connectors **18** and **19** in FIG. **1.** It is a particularly important characteristic of the invention that when the clamping tabs are bent into parallelism with the base portion, the apertures therein are deformed from a generally circular to an oval configuration, with the edges of the apertures gripping the wire very tightly.

A typical resistance wire assembly is shown in FIG. **1** wherein a resistance wire coil element **44** extends between independent connectors **18** and **19** mounted on terminal board **12** with its opposite end wires **30** gripped and clamped between the tabs and the base portion with the tabs bent toward one another into substantial parallelism with the base portion.

What is claimed is:

1. An electric wire connector formed of readily bendable sheet metal, comprising

a flat base having bent out of the plane thereof on one side a pair of spaced, opposed, generally flat clamping tabs

said tabs each having at least one wire receiving aperture closely adjacent to said base

with said base having a portion extending between said apertures in opposite tabs and having side extensions at the sides thereof between said tabs, said side extensions being bent out of the plane of said base on the side thereof opposite said tabs

said apertures in opposite tabs being positioned with respect to one another for the insertion of a wire thereinto

to be gripped and clamped between said tabs and said base portion upon bending of said tabs toward one another into substantial parallelism with said base portion.

2. An electric wire connector formed of readily bendable sheet metal, comprising

a flat base having bent out of the plane thereof on one side a pair of spaced, opposed, generally flat clamping tabs

said tabs each having at least one wire receiving aperture closely adjacent to said base

with said base having a portion extending between said apertures in opposite tabs and having side extensions at the sides thereof between said tabs

said side extensions extending beyond at least one of said tabs in a direction perpendicular thereto and are interconnected in the plane of said base to provide an end extension

said apertures in opposite tabs being positioned with respect to one another for the insertion of a wire thereinto

to be gripped and clamped between said tabs and said base portion upon bending of said tabs toward one another into substantial parallelism with said base portion.

3. A connector as claimed in claim **2** wherein

said end extension is provided with terminal board mounting means for mounting said connector on a terminal board extending in a plane parallel to said tabs.

4. A connector as claimed in claim **3** wherein

said end extension includes an electrical connecting member extending beyond said terminal board mounting means.

5. An electric wire connector formed of readily bendable sheet metal comprising

a flat base having bent perpendicularly out of the plane thereof

on one side thereof a pair of spaced, opposed, generally flat clamping tabs and on the opposite side thereof a pair of side extensions at the sides thereof between said clamping tabs

said side extensions extending beyond one of said clamping tabs in a direction perpendicular thereto and being interconnected in the plane of said base to provide an end extension

said tabs each having at least one wire receiving aperture closely adjacent to said base

with said base having a portion extending between said apertures in opposite tabs

said apertures in opposite tabs being positioned with respect to one another for the insertion of a wire there-into

to be gripped and clamped between said tabs and said base portion upon bending of said tabs toward one another into substantial parallelism with said base portion.

6. A connector as claimed in claim **5** wherein

said end extension is provided with terminal board mounting means for mounting said connector on a terminal board extending in a plane parallel to said tabs and

includes an electrical connecting member extending beyond said terminal board mounting means.

7. A terminal assembly comprising

a terminal board of flat sheet insulating material having a plurality of slots therein and

a plurality of electric wire connectors mounted on said board and extending through said slots

said connectors being formed of readily bendable sheet metal and comprising

a flat base having bent perpendicularly out of the plane thereof

on one side thereof a pair of spaced, opposed, generally flat clamping tabs and

on the opposite side thereof a pair of side extensions at the sides thereof between said clamping tabs

said side extensions extending beyond one of said clamping tabs in a direction perpendicular thereto and being interconnected in the plane of said base to provide an end extension

said end extension including an electrical connecting member extending through said slots and having mounting means for mounting said connectors on said terminal board with their electrical connecting members on one side of said terminal board and the remainder of said connector on the opposite side of said terminal board

said tabs each having at least one wire receiving aperture closely adjacent said base

with said base having a portion extending between said apertures in opposite tabs

said apertures in opposite tabs being positioned with respect to one another for the insertion of a wire thereinto

to be gripped and clamped between said tabs and said base portion upon bending of said tabs toward one another into substantial parallelism with said base portion.

8. A terminal assembly as claimed in claim **7**, further including

a resistance wire element extending between independent connectors mounted on said terminal board

said resistance wire having its opposite ends gripped and clamped between said tabs and said base portion with said tabs bent toward one another into substantial parallelism with said base portion.

* * * * *