United States Patent [19]

Webb

[11] **3,772,636**

[45] **Nov. 13, 1973**

[54] **CONNECTOR**

[75] Inventor: **Alan David Webb,** Hinchley Wood, England

[73] Assignee: **The British Petroleum Company Limited,** London, England

[22] Filed: **Jan. 17, 1972**

[21] Appl. No.: **218,305**

[30] **Foreign Application Priority Data**

Feb. 4, 1971 Great Britain 3,886/71

[52] **U.S. Cl.** ..... **339/117 R,** 339/111

[51] **Int. Cl.** **H01r 3/00**

[58] **Field of Search** ..... 339/114–117, 111, 94; 166/.5, .6; 174/8, 17.06, 17.08, 31

[56] **References Cited**

UNITED STATES PATENTS

3,158,680	11/1964	Lovitt et al	339/94 M X
3,324,449	6/1967	McLoad	339/117 R
2,857,557	10/1958	Imhof	339/117 R UX
3,241,095	3/1966	Phillips	339/117 R X
3,602,873	8/1971	Childers	339/117 R

FOREIGN PATENTS OR APPLICATIONS

1,012,351	7/1957	Germany	339/94 R
1,114,876	10/1961	Germany	339/117 R

Primary Examiner—Marvin A. Champion
Assistant Examiner—Lawrence J. Staab
Attorney—George B. Finnegan, Jr. et al.

[57] **ABSTRACT**

An underwater connector for connecting electrical cables consists of a plug and socket. The connector operates when it is oil filled, the socket having a reservoir in its body filled with oil with the opening of the body facing down, there is a metal depression in the reservoir connected to one cable. The plug has a hollow body and a metal projection connected to the other cable which fits into the socket body. When the plug is inserted into the socket the oil in the socket reservoir is forced into the reservoir in the plug body and electrical contact between the plug and socket is made without any water coming in contact with the electrical contact in the socket.

6 Claims, 1 Drawing Figure

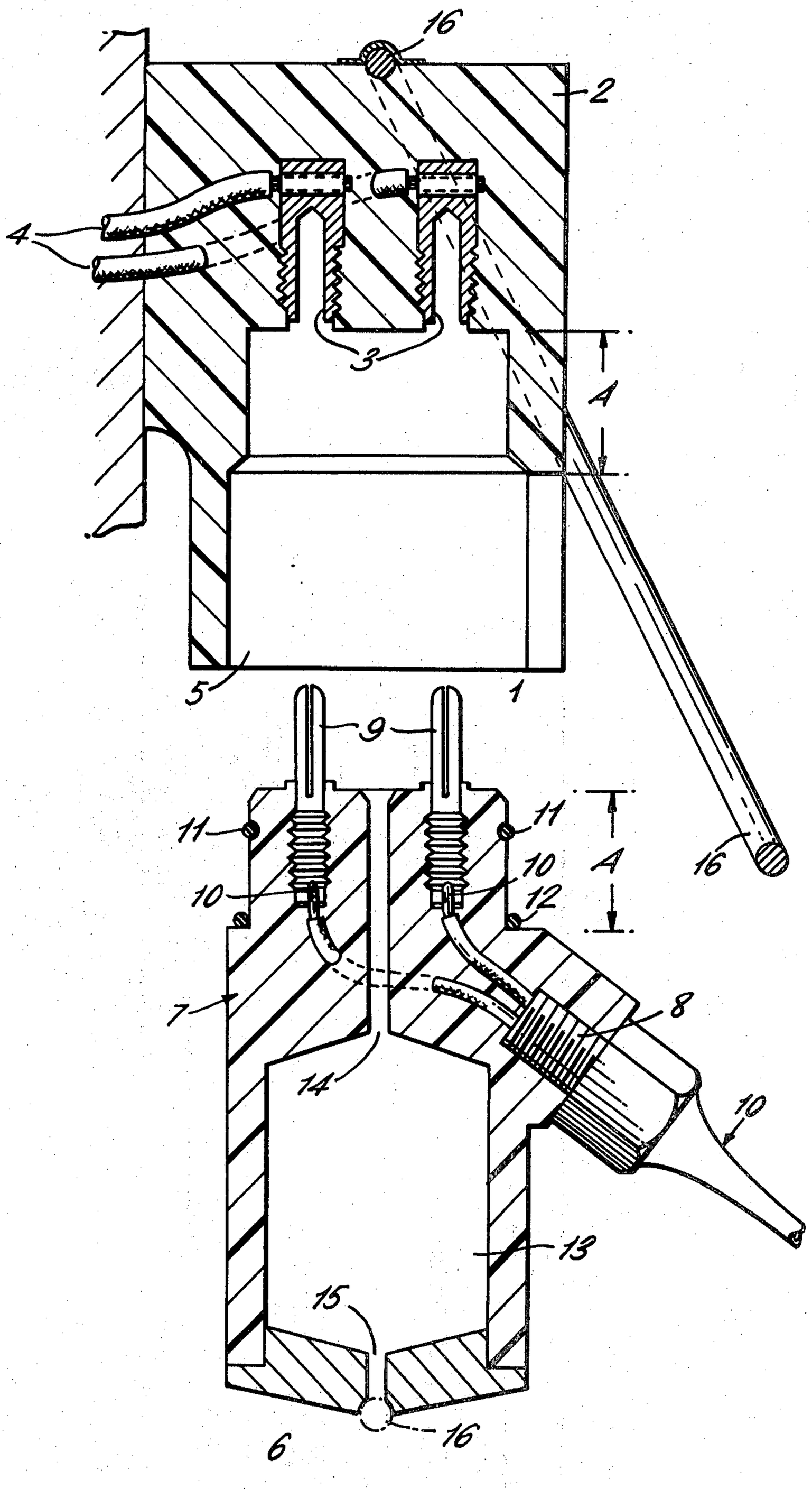
16
2
4
3
A
5
1
9
11
11
10
10
A
16
12
7
8
14
10
13
15
16
6

CONNECTOR

This invention relates to connectors for use under water, more particularly it relates to connectors suitable for use in making electrical connections under water.

It is known to make electrical connections under water e.g. sea, using a connector comprising a socket consisting of a rubber plug with holes passing through it. Part way down the holes electrical contact pieces are mounted which are joined to one end of the cable which is to be joined. The other portion of the connector comprises a plug having the same number of solid rubber cylinders projecting out of it as there are holes in the socket. The solid rubber cylinders have a slightly outwardly flared end and have electrical contact pieces mounted part way along them, which contact pieces are connected to the other part of the cable which is to be joined. When the connector is assembled the rubber clyinders of the plug fit into the holes in the socket and the two sets of contact pieces make an electrical connection. When the connection is made under water the flared end of the rubber cylinders of the plug force the water out of socket as the plug is inserted thus ensuring a dry contact.

However when it is desired to break contact the electric power in the circuit has to be switched off otherwise electrolytic action will take place causing corrosion. Thus the connector can not be left disconnected with the power still on. This drawback is particularly severe in under-sea operations.

I have now devised a connector which can reduce this difficulty.

According to the invention there is provided an electrical connector comprising a socket having a hollow reservoir open at one end and closed at the other, there being at least one depression in the closed end which depression contains an electrical contact piece adapted to be connected to a cable, and a plug containing at least one projecting member having an electrical contact mounted thereon adapted to be connected to a cable, and a reservoir with one opening adjacent the projecting member and a second opening at the other end of the reservoir so that when the plug is inserted into the socket the body of the plug fills the reservoir space of the socket and projecting member or members of the plug fit into the depression or depressions of the socket and make electrical contact therewith.

In making a connection under water the contact pieces of the socket are connected to one part of the cable to be joined and the socket is held with the opening of its reservoir facing down. A liquid lighter than water is floated up into the socket reservoir to fill the depressions in the reservoir and at least partly fill the reservoir.

The connector pieces of the plug are connected to the other part of the cable to be joined and the plug inserted into the socket. As the body of the plug enters the reservoir in the socket the oil is forced through the opening in the plug reservoir adjacent the projecting member, and water is forced out of the other opening in the plug reservoir. When the plug is fully inserted in the socket an electrical connection is made between the two connector pieces.

The projecting members of the plug preferably have a groove down their sides or a hollow channel, in order to facilitate displacement of the oil as they are inserted into the depression into the socket.

Preferably the projecting member of the plug is made of metal e.g. copper or brass and is connected to the cable using conventional means e.g. soldering.

The depressions in the socket are preferably metal inserts in the form of hollow metal cylinders, into which the projecting metal members of the plug fit, the metal cylinders can be connected to the cable using conventional connection means e.g. soldering.

The plug preferably has sealing rings round its outside in order to fit closely into the socket reservoir.

The body of the socket and plugs can be made of any non conductive material e.g. an epoxy resin, a phenol formaldehyde resin a urea-formaldehyde resin or a polyester resin.

The plug can be held in place in the socket by any suitable means e.g. a snap-fitting or by a band passing over the assembled plug and socket.

The liquid used in the connector can be any liquid lighter than water which is non conductive and immiscible with water e.g. a mineral lubricating oil.

When the connector is connected and the assembled circuit is to be broken the plug is withdrawn and water flows in through the bottom opening in the plug reservoir and oil passes through the opening adjacent the projecting member of the plug into the reservoir in the socket, thus no water comes into contact with the electrically conductive parts of the socket so no electrolytic action can take place. If the contact is to be left broken for a considerable period then a dummy plug will normally be inserted in the socket.

There can be any number of electrical connections made using the connector of the present invention, depending on the number of projecting members and the corresponding depressions in the socket. For electric power there will normally be three connections though for use in communication systems there may be a different number.

The invention will now be described with reference to the accompanying drawings which illustrate a cross-section through a plug and socket.

The socket **1** comprises an epoxy resin casing **2** having metal inserts **3** mounted and connected to cables **4** and reservoir space **5.**

The plug **6** comprises an epoxy resin casing **7** having a cable penetrator assembly **8** moulded into it. Two metal projection pieces **9** are fixed in casing **7** and connected to cable **10** through cable penetrator assembly **8.** O rings **11** and **12** are mounted round plug body as shown. The reservoir **13** is open through openings **14** and **15.** The gap A is the same in socket and plug.

In operation socket **1** is held vertical under water and an oil is floated up into it to fill socket reservoir space **5** and metal insert space **3.** When plug **6** is inserted oil is forced through opening **14** and forces water out through opening **15** till projections **9** fit into inserts **3** thus making an electrical connection. The connector is held assembled by band **16** passing over the connector.

Upon disengagement water flows through opening **15** and oil flows out of reservoir **13** through opening **14** into reservoir **5** and inserts **3,** thus preventing water coming into contact with inserts **3.**

I claim:

1. An electrical connector suitable for underwater use comprising a plug and a socket for the plug,

a. said socket having an internal space providing a reservoir for an electrically non-conductive liquid lighter than water, said reservoir being open at one

end for insertion of said plug and being closed at the other end, there being at least one depression in said closed end, said depression containing an electrical contact member having provision for connection to an electrical cable, and

b. said plug having at least one electrical contact member projecting from one end, said plug contact member having provision for connection to an electrical cable, and said plug also having an internal space providing a storage reservoir for liquid, a reduced diameter opening leading from one end of the plug reservoir to the exterior of the plug adjacent said projecting member and a second reduced diameter opening leading from the other end of the plug reservoir to the exterior of said plug at the corresponding end, said plug being of a configuration to enter and fill the socket reservoir, whereby, when the plug is inserted into the socket, the plug will force said electrically non-conductive liquid present in the socket reservoir through the opening adjacent the projecting member into the plug storage reservoir, and water present in the plug storage reservoir, will thereby be displaced and forced through the opening at the other end of the plug reservoir, out of the plug, and the electrical contact member projecting from the plug will fit into the depression in the socket and make electrical connection with the electrical contact piece in the depression.

2. An electrical connector as claimed in claim **1** in which the projecting member of the plug is made of metal.

3. An electrical connector as claimed in claim **2** in which the metal is copper.

4. An electrical connector as claimed in claim **1** in which the projecting member or members have a groove in their side.

5. An electrical connector as claimed in claim **2** in which the metal is brass.

6. A method of reducing corrosion from electrolysis in the use of an electrical connector making an electrical connection under water between two electrical cables, the connector having a plug and a a socket for the plug, the socket having an internal space providing a reservoir for a liquid open at one end for insertion of the plug and closed at the other end and having a depression in the closed end containing an electrical contact member, and the plug being of a configuration to enter and fill the socket reservoir and having an electrical contact member projecting from one end for insertion in the depression in the socket and a reservoir for liquid open at both ends, one of said cables being connected to the electrical contact member of the plug and the other to the electrical contact member of the plug, which method comprises: holding the socket below the water surface with the open end facing downwards, thereafter filling the socket reservoir with a water immiscible electrically non-conductive liquid lighter than water and then, while maintaining the downward facing position of the socket, inserting the plug in the socket, whereby the liquid lighter than water is forced from the socket reservoir into the open-ended plug reservoir and water in the plug reservoir is displaced and forced out of the plug reservoir, and contact is made between the respective contact members in the plug and socket.

* * * * *