United States Patent [19]

Frey et al.

[11] **3,772,635**

[45] **Nov. 13, 1973**

[54] **UNIVERSAL MINIATURE CONNECTOR FOR PLURAL CONDUCTORS**

[75] Inventors: **Dean Rudisill Frey,** Dover; **Robert Walter Henn,** Bridgewater Twp., Somerset Cty.; **Donald Tolman Smith,** Piscataway Twp., Middlesex Cty.; **Arthur Guntis Vedejs,** Morris Twp., Morris Cty., all of N.J.

[73] Assignee: **Bell Laboratories Incorporated,** Murray Hill, N.J.

[22] Filed: **Dec. 22, 1971**

[21] Appl. No.: **210,750**

[52] **U.S. Cl.** ..... **339/99 R,** 339/98, 339/111, 339/113, 339/208

[51] **Int. Cl.** **H01r 9/08,** H01r 3/00

[58] **Field of Search** ..... 339/98, 99, 17 F, 339/176 MF

[56] **References Cited**

UNITED STATES PATENTS

3,631,378	12/1971	Ellis	339/125 R
3,189,863	6/1965	Leach	339/99 R
3,177,458	4/1965	Buchanan	339/99
3,241,095	3/1966	Phillips	339/99 R X

FOREIGN PATENTS OR APPLICATIONS

1,377,374	9/1964	France	339/99 R

Primary Examiner—Marvin A. Champion
Assistant Examiner—William F. Pate, III
Attorney—W. L. Keefauver

[57] **ABSTRACT**

The connector is a basic-splice unit of three parts: an index strip, a connector module, and a cap. The index strip has alternately peaked and flat indexing teeth which help split the wire pairs. The strip acts as a temporary wire holder when dressing in wires to be joined. The connector module contains a double-ended slotted contact element. The module top is similar in design to the index strip top and performs the same functions. The module has two rails along its length which accommodate an optional bridge-connector block. The connector module snap-mounts to the indexing strip. In this process the slotted beam contact element penetrates the insulation and makes contact to the wire while the connector module bears down on the wire on each side of the contact element to firmly snug it in place. Between each tooth of the index strip, a cantilever beam forces the wire against a snubbing brace of the connector module, deflecting differing amounts depending on the wire gauge.

32 Claims, 19 Drawing Figures

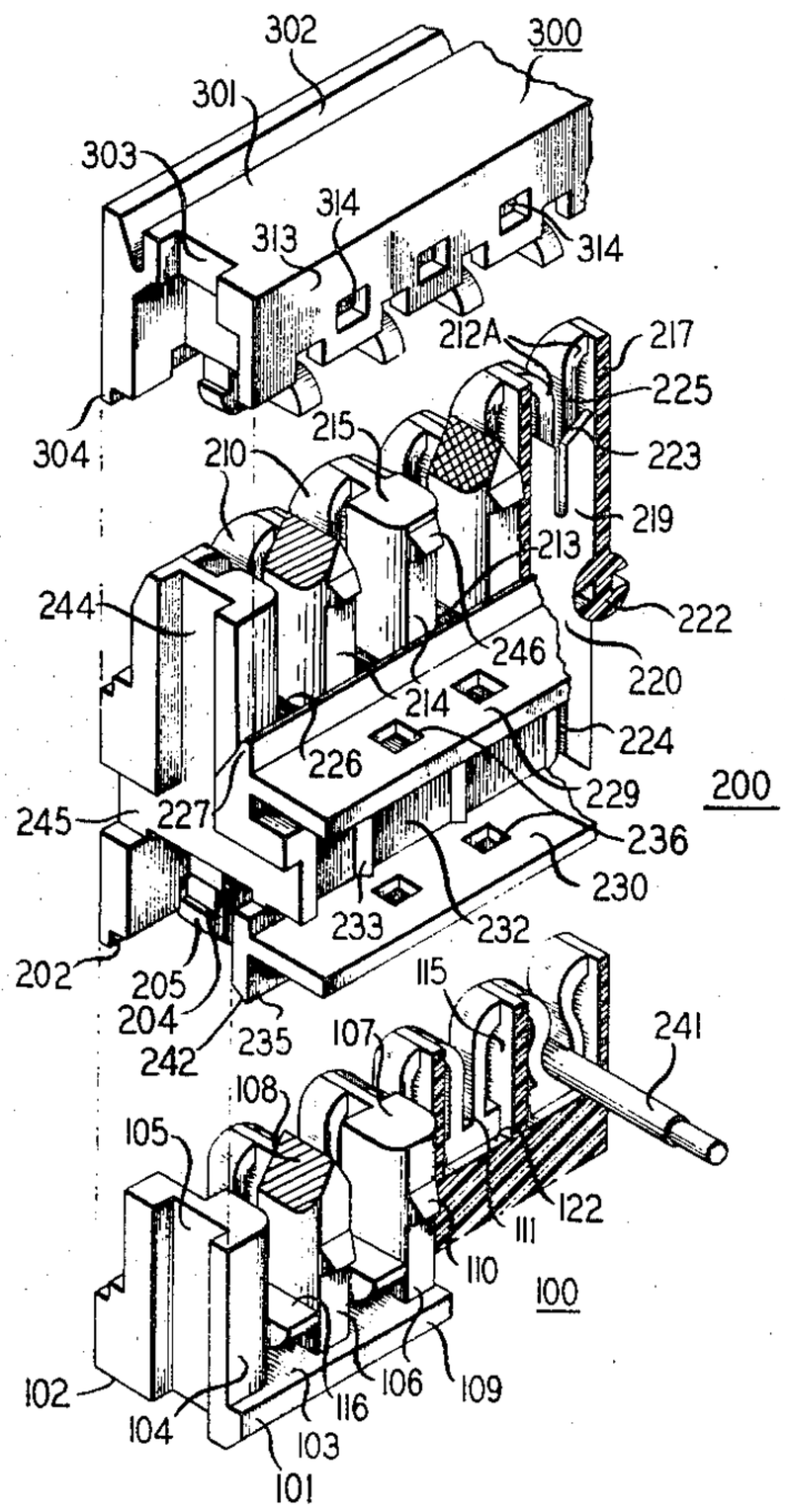

FIG. 1

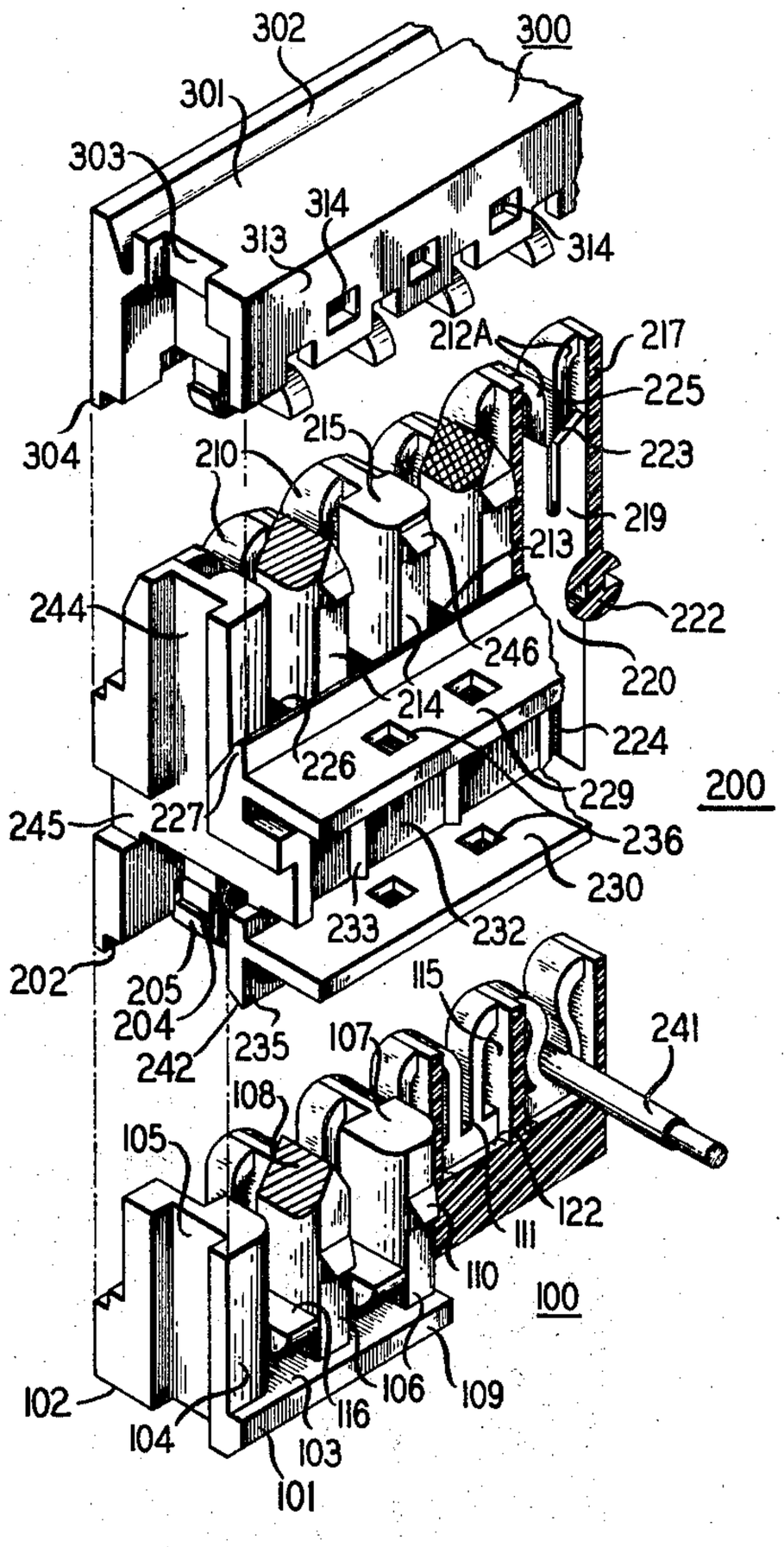
302
300
301
303
314
313
314
212A
217
225
304
215
223
210
219
213
244
222
246
220
214
224
226
229
200
245
227
236
230
233
232
202
205
115
204
235
107
241
242
108
105
122
111
110
100
102
106
109
104
116
103
101

FIG. 2

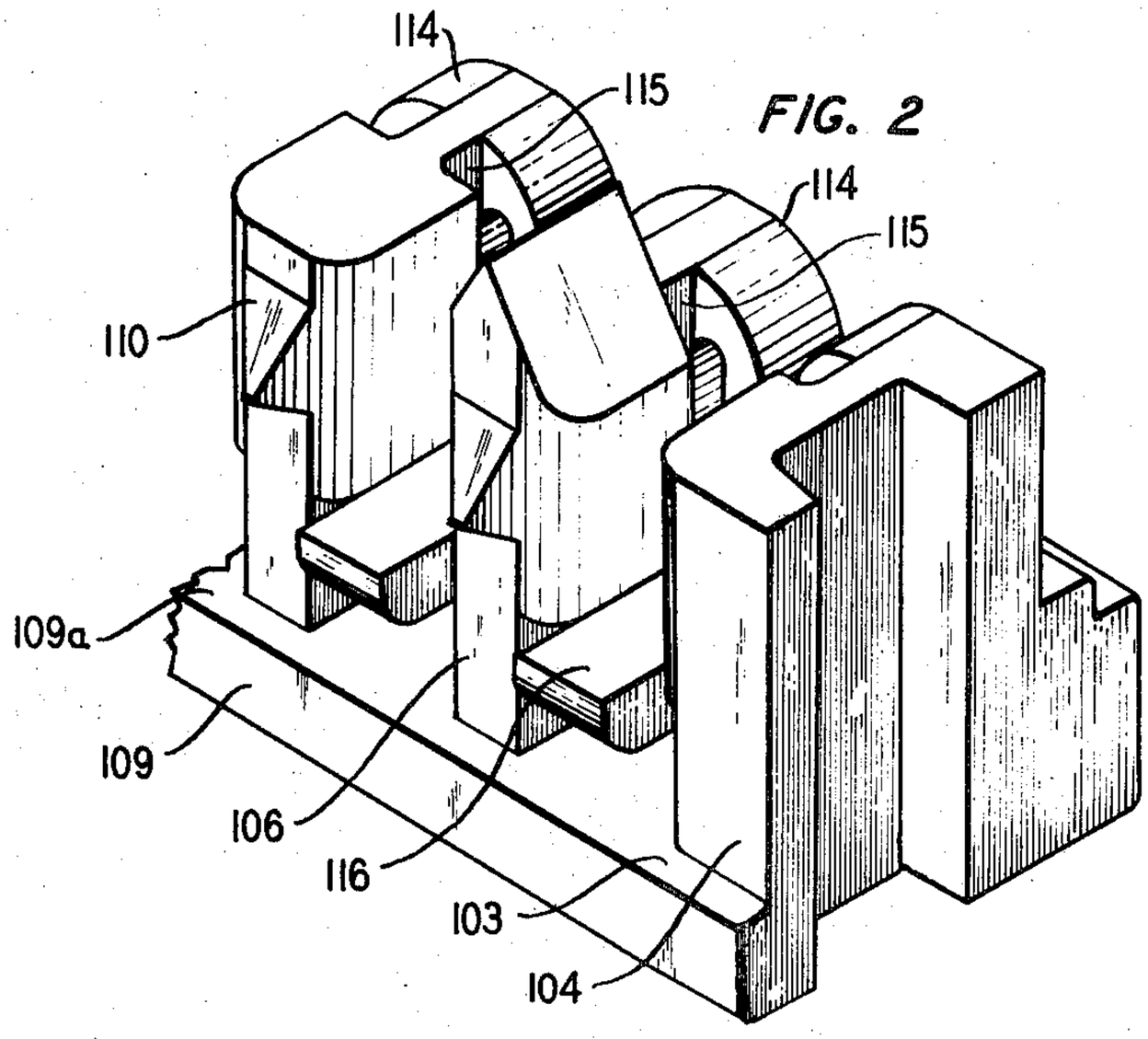
114
115
114
115
110
109a
109
106
116
103
104

FIG. 3

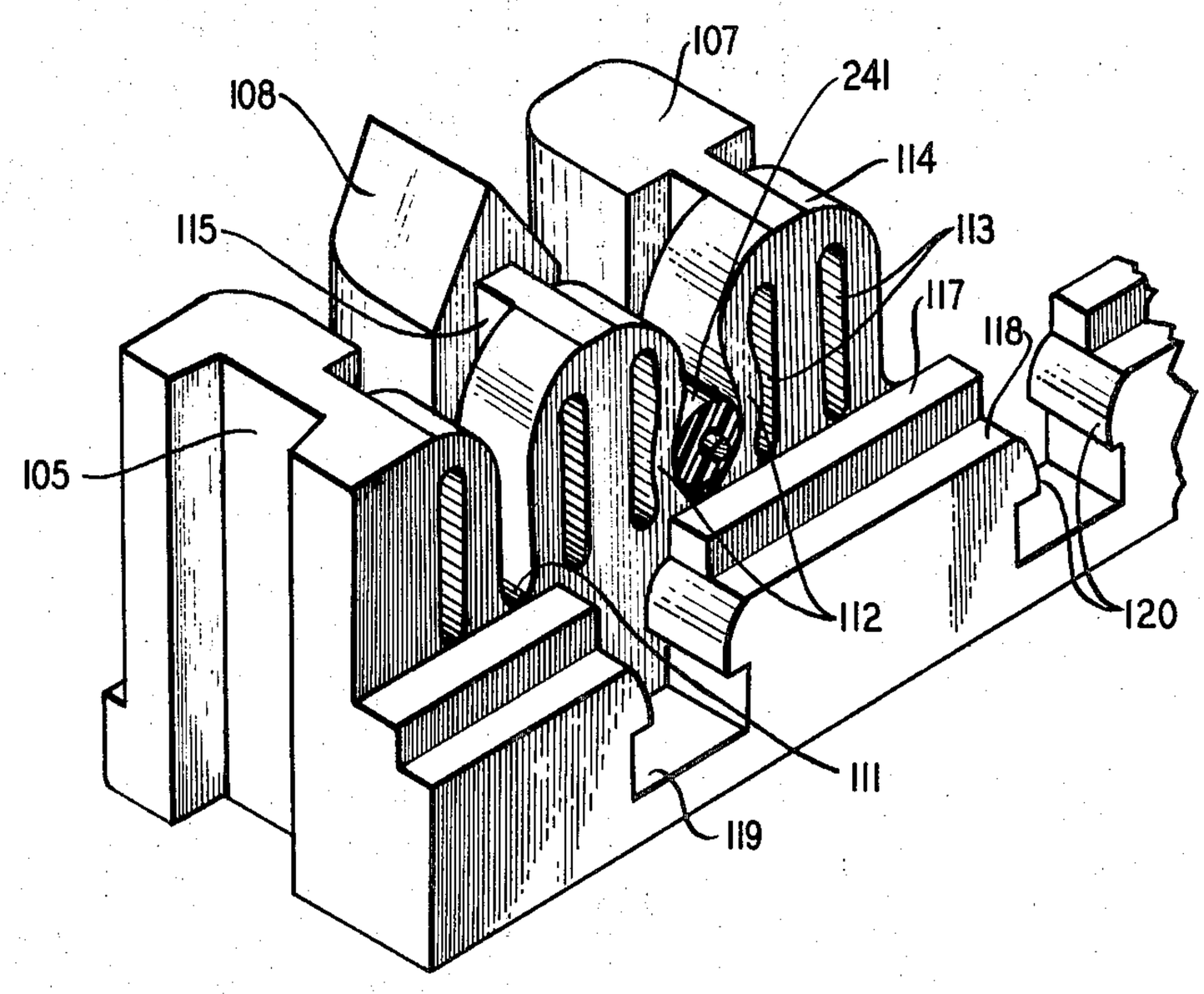
107
108
241
114
115
113
117
118
105
112
120
111
119

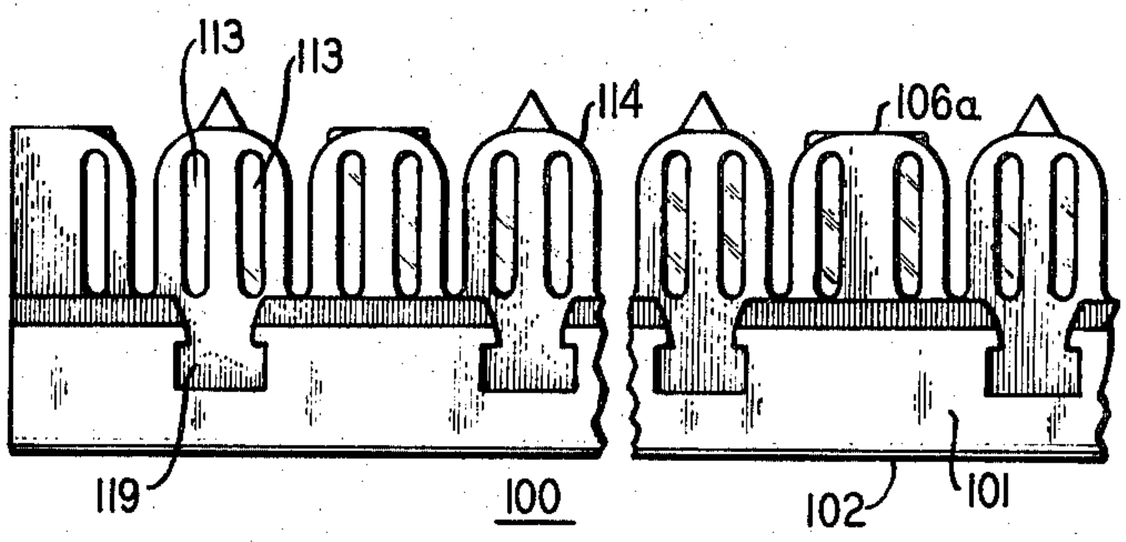

FIG. 3B

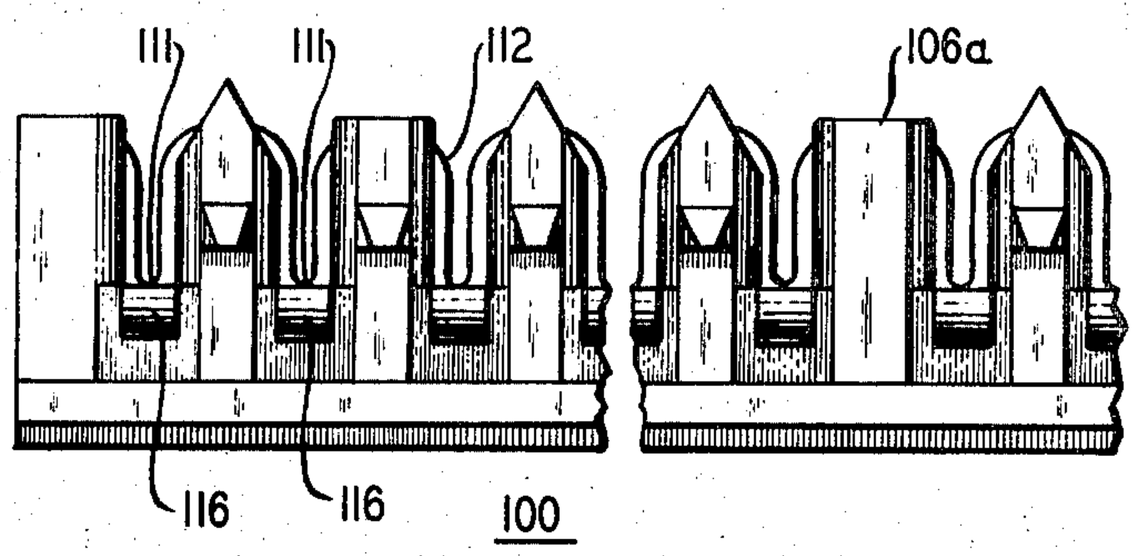

FIG. 3C

FIG. 3A

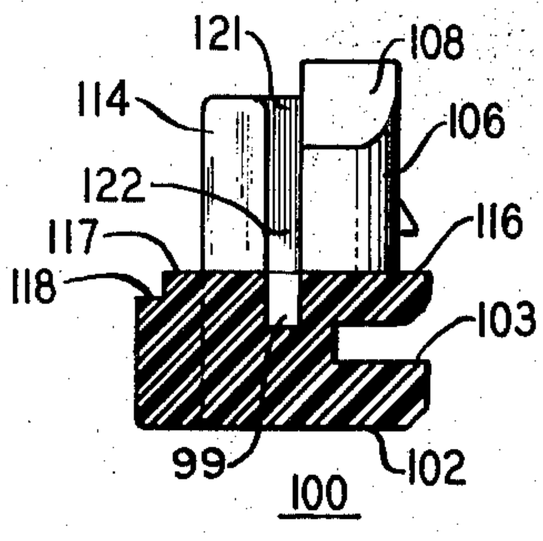

FIG. 7

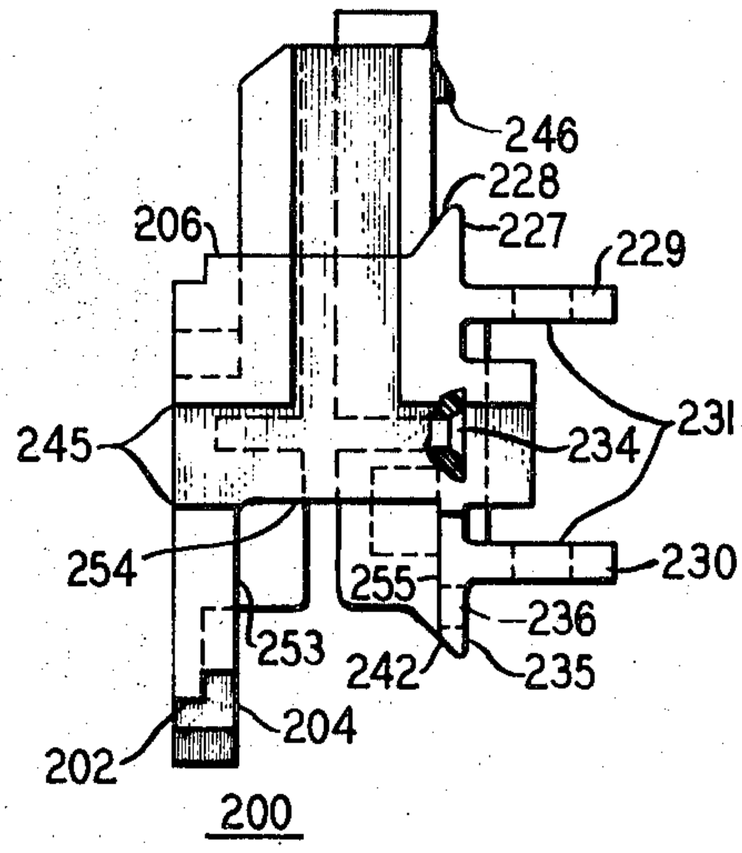

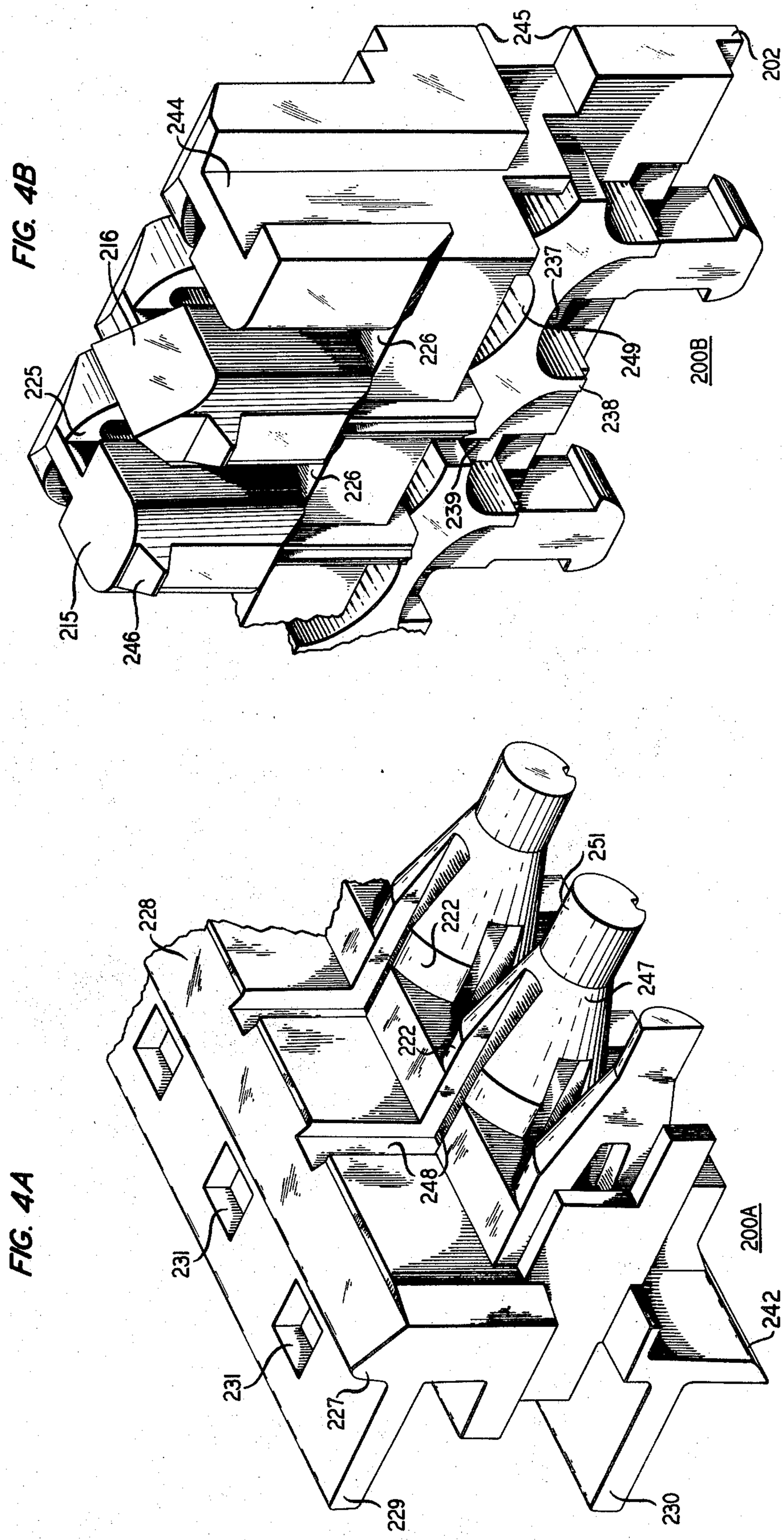
245
202
244
216
225
226
237
249
238
239
215
246
200B
228
222
251
247
248
231
227
229
230
200A
242

FIG. 4B

FIG. 4A

FIG. 5

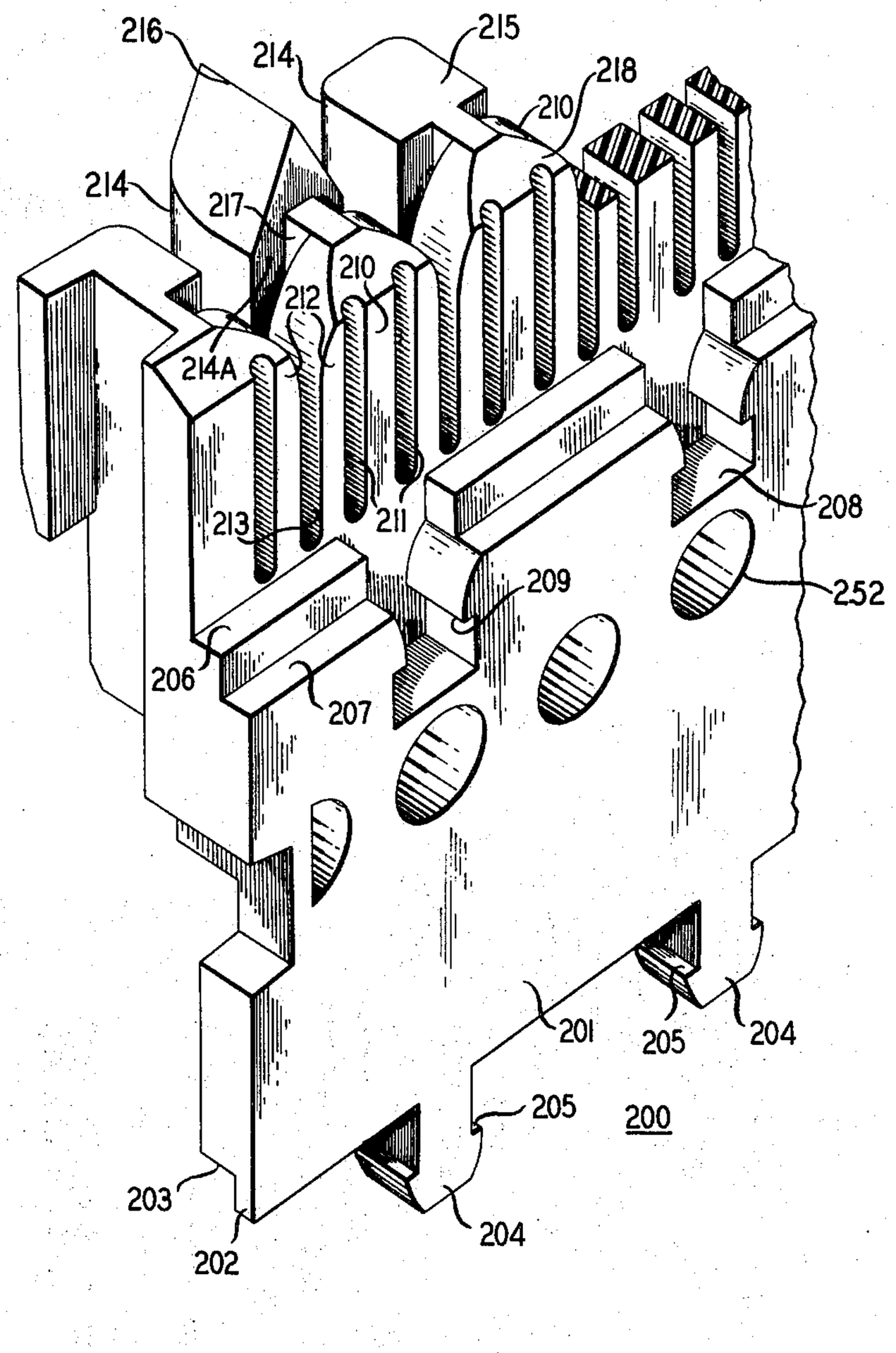
216
214
215
218
210
214
217
210
212
214A
213
211
208
209
252
206
207
201
205
204
205
200
203
204
202

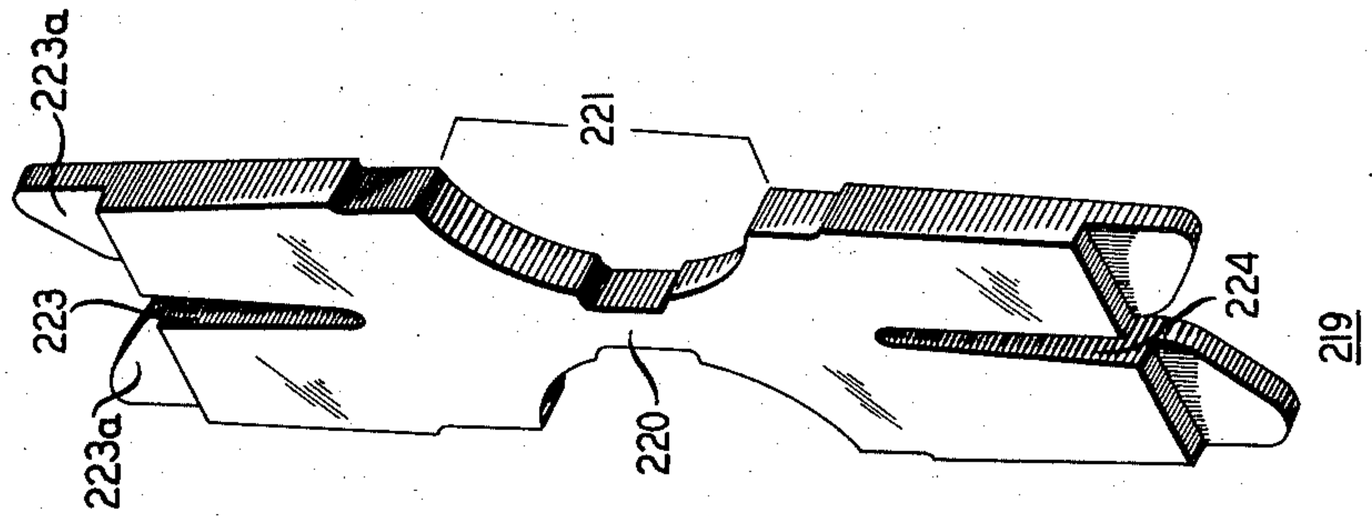
223a
221
223
224
219
223a
220

FIG. 6A

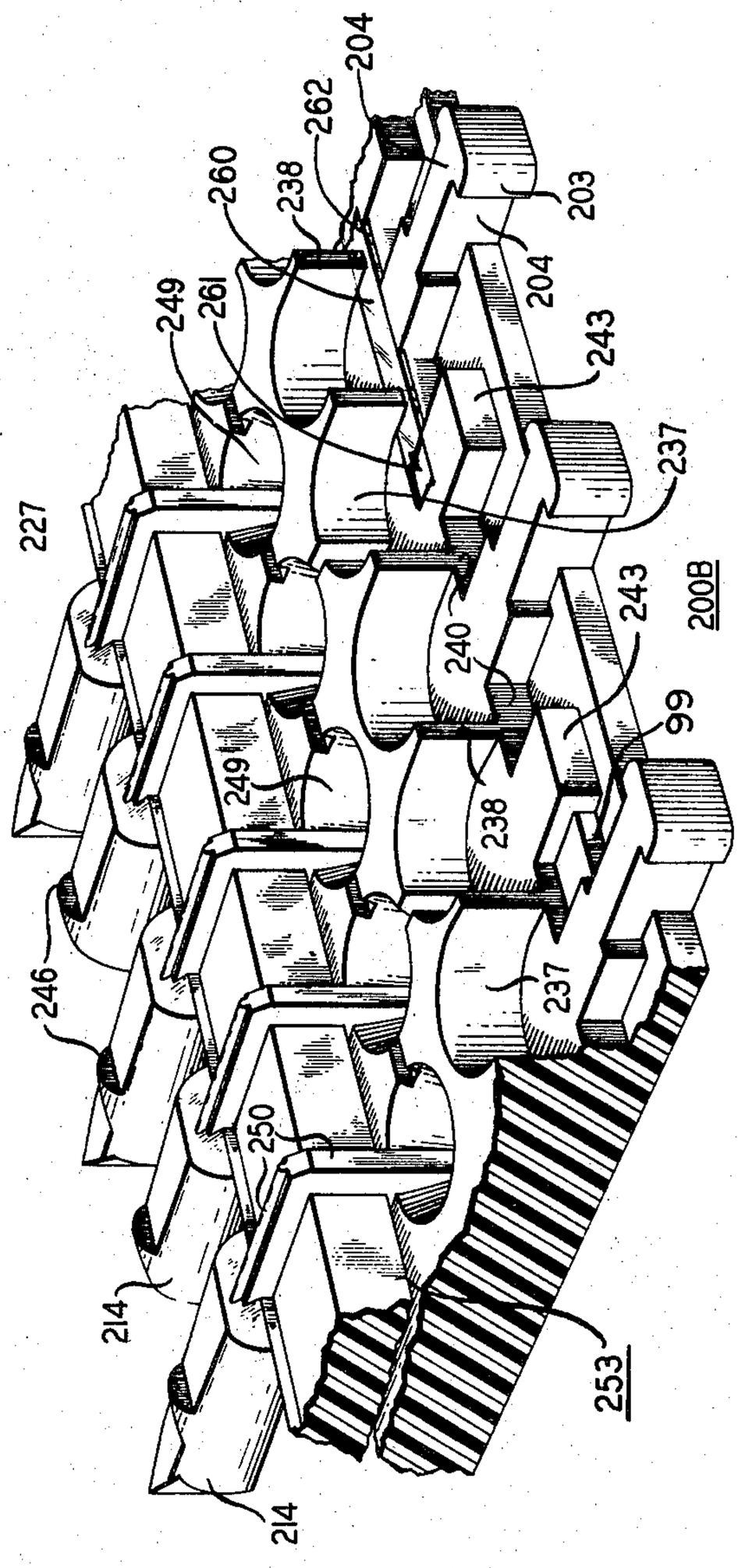
204
262
260
238
203
249
261
204
243
237
227
240
243
200B
249
238
99
246
237
250
214
253
214

FIG. 6

FIG. 8

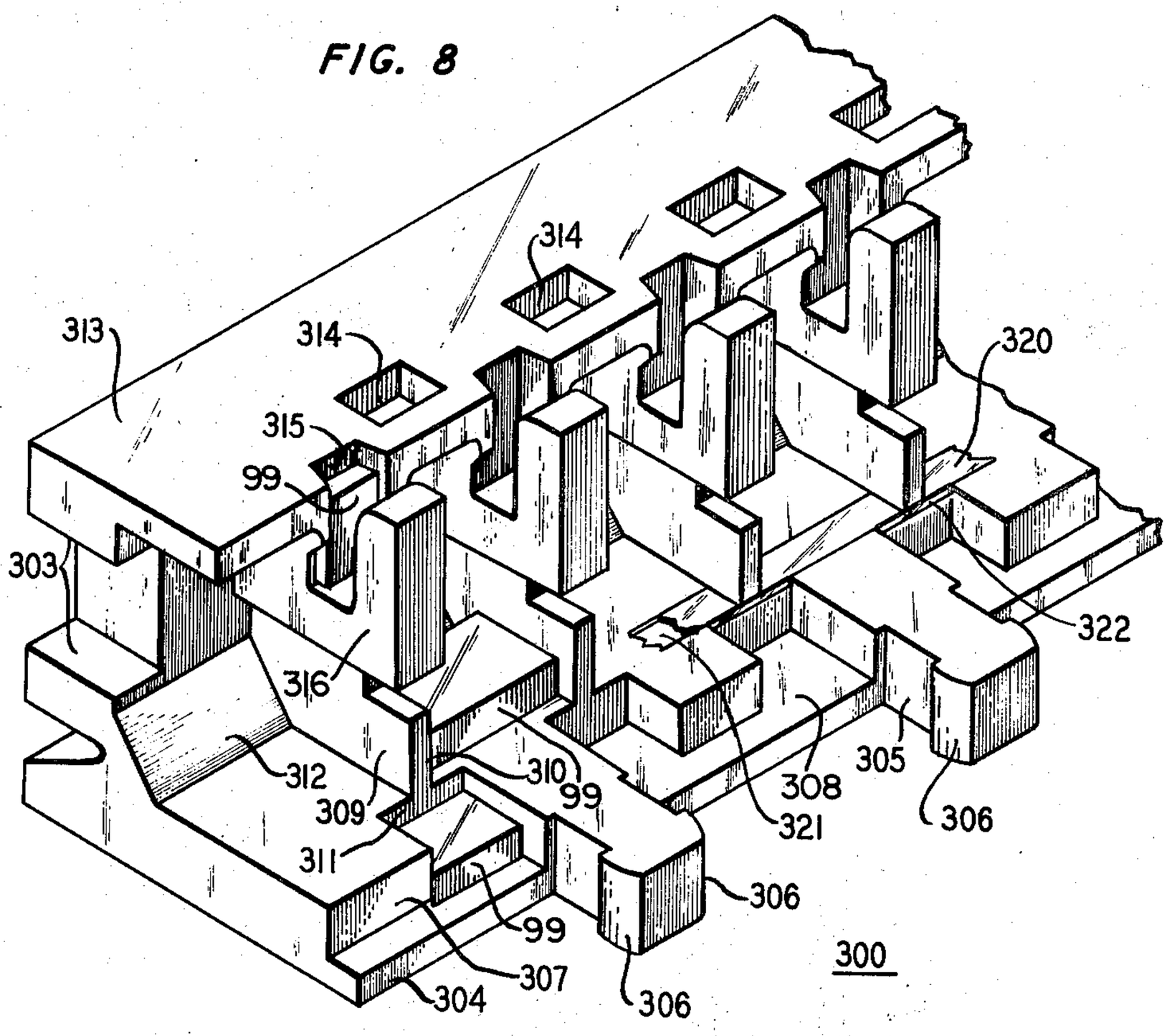
313
314
314
315
99
303
316
312
309
311
304
307
99
306
310
99
308
321
305
306
320
322
306
300

FIG. 9

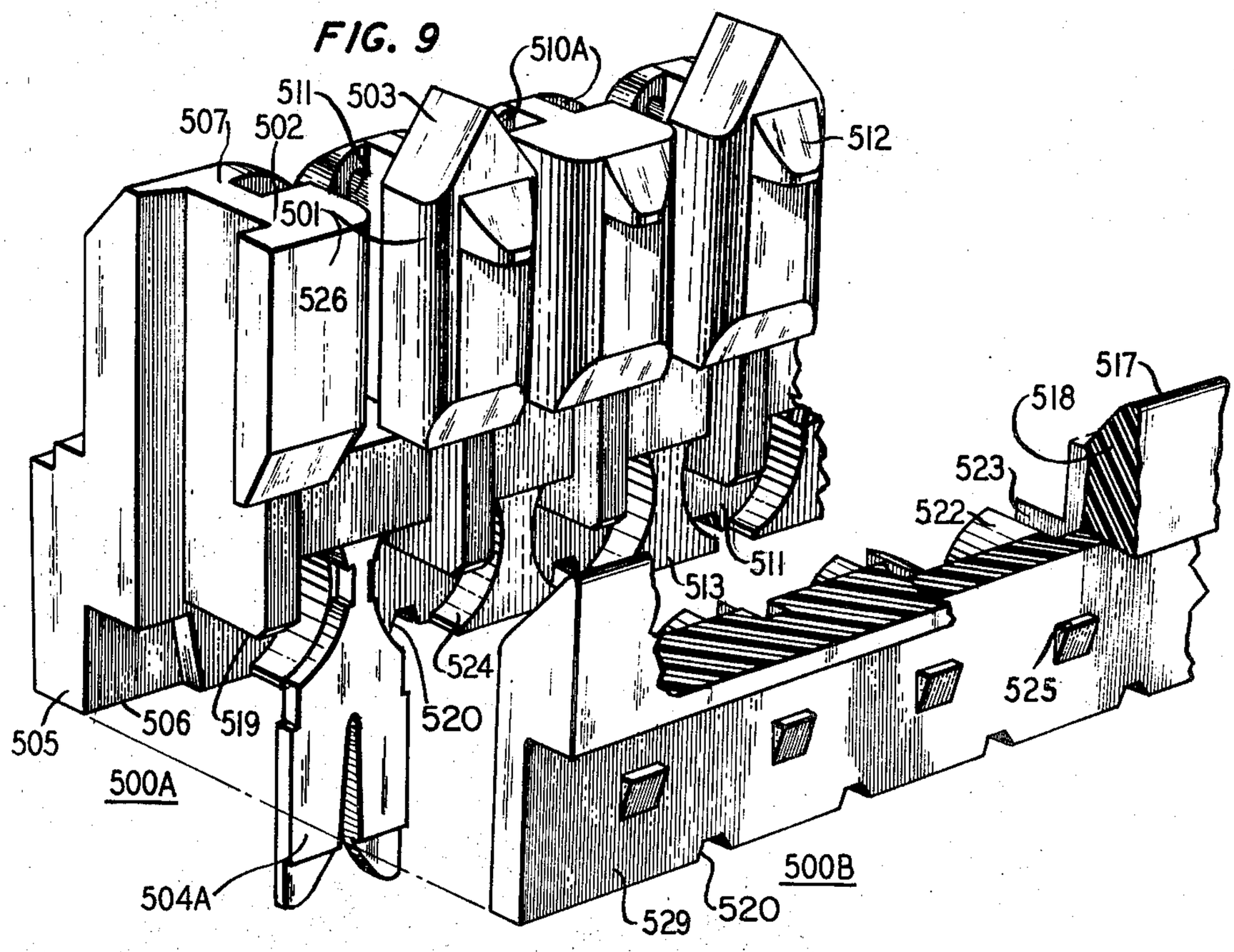
510A
511
503
507
502
512
501
526
517
518
523
522
511
513
524
520
525
505
506
519
500A
504A
529
520
500B

FIG. 10

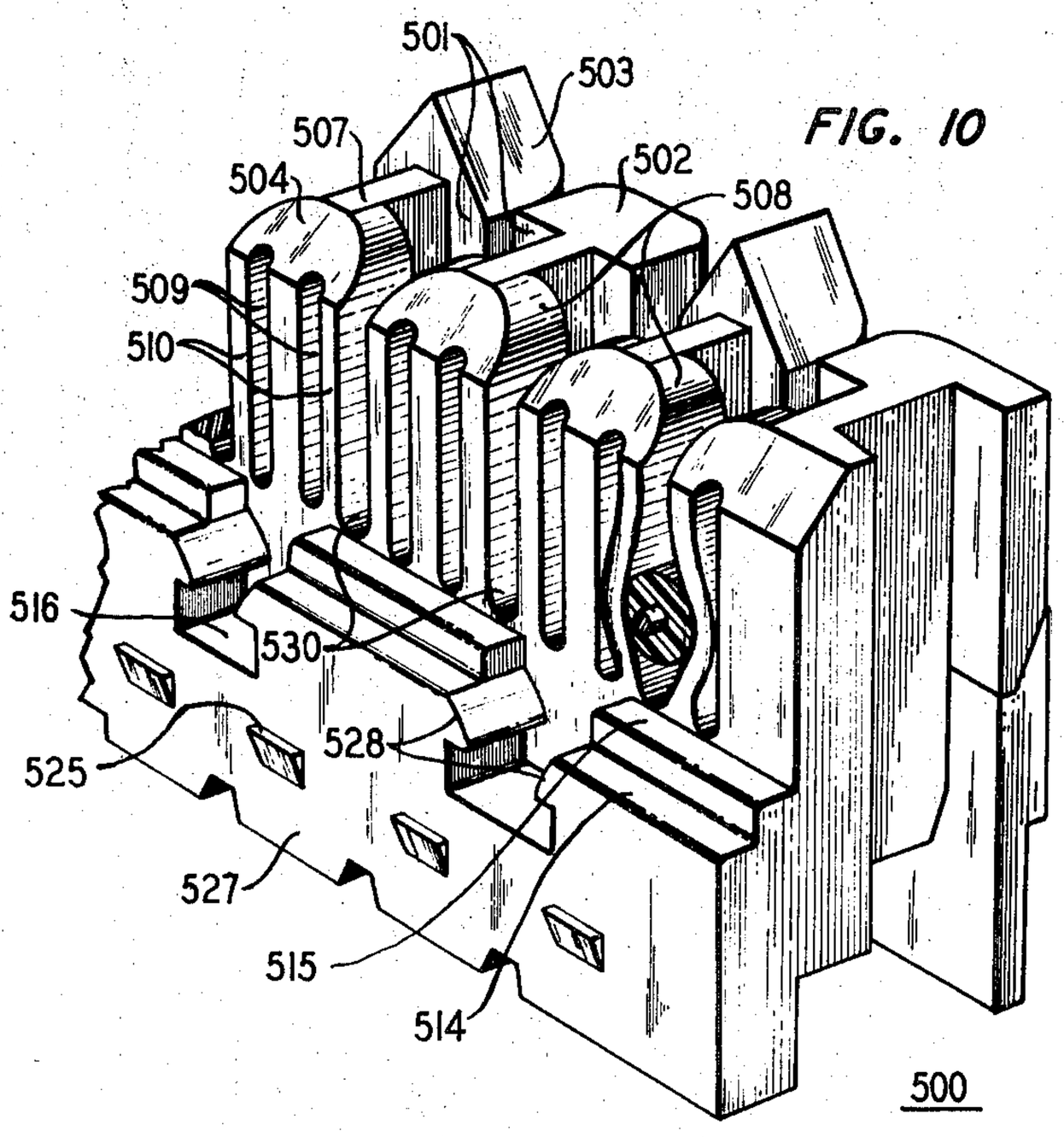
501
503
507
502
504
508
509
510
516
530
525
528
527
515
514
500

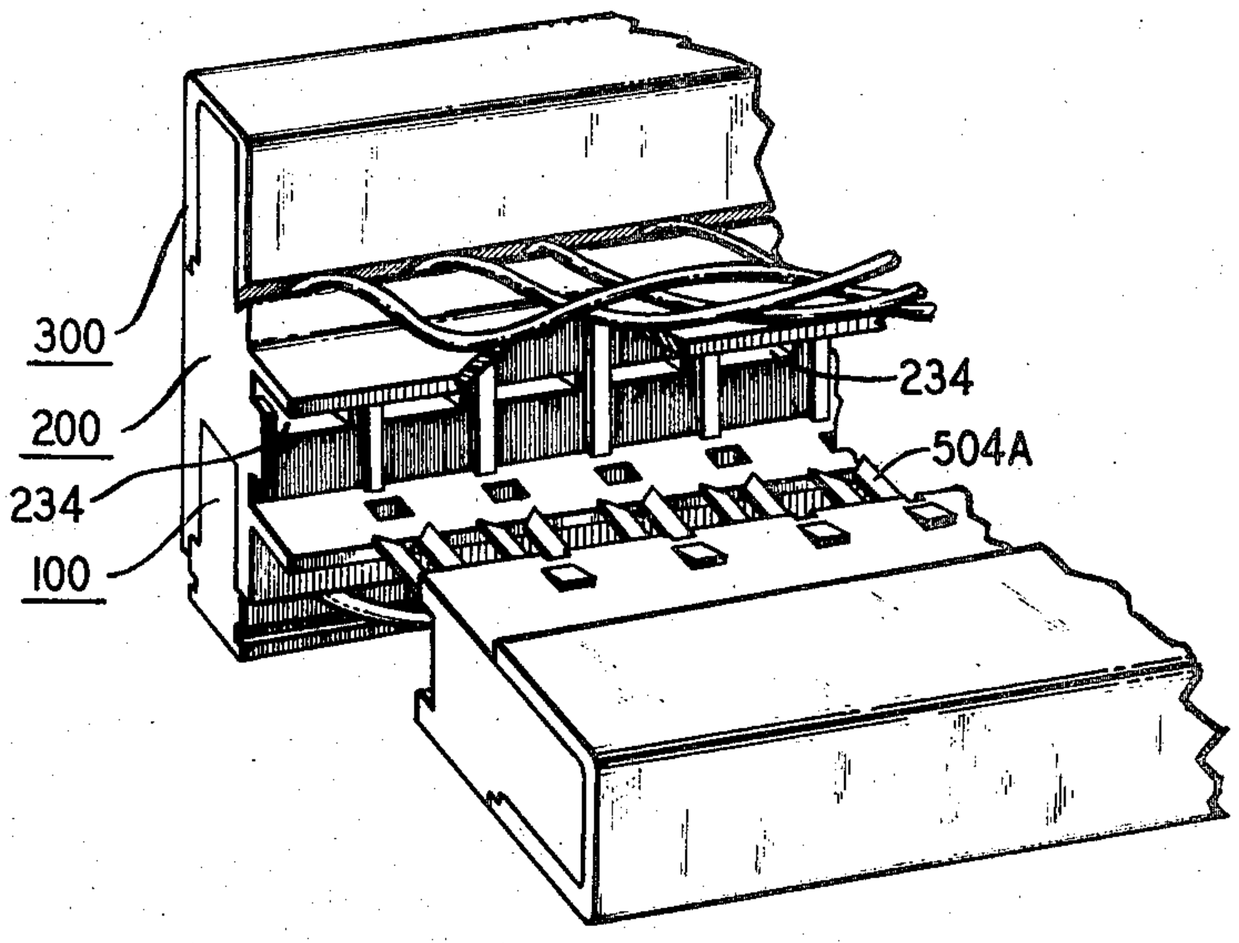

FIG. 11

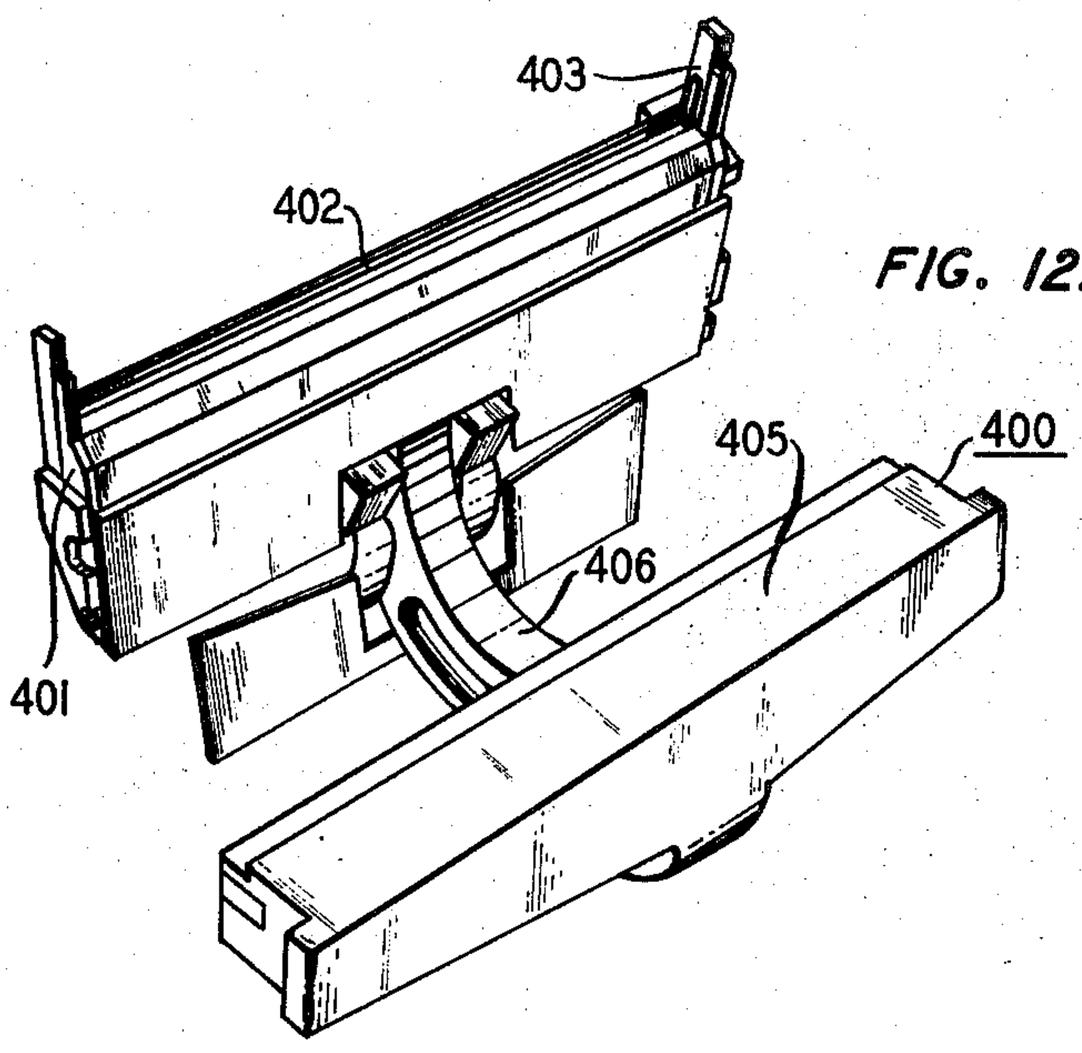

FIG. 12A

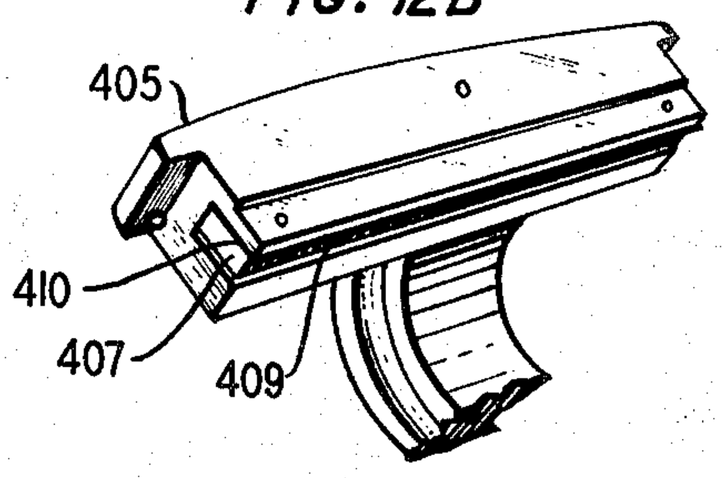

FIG. 12B

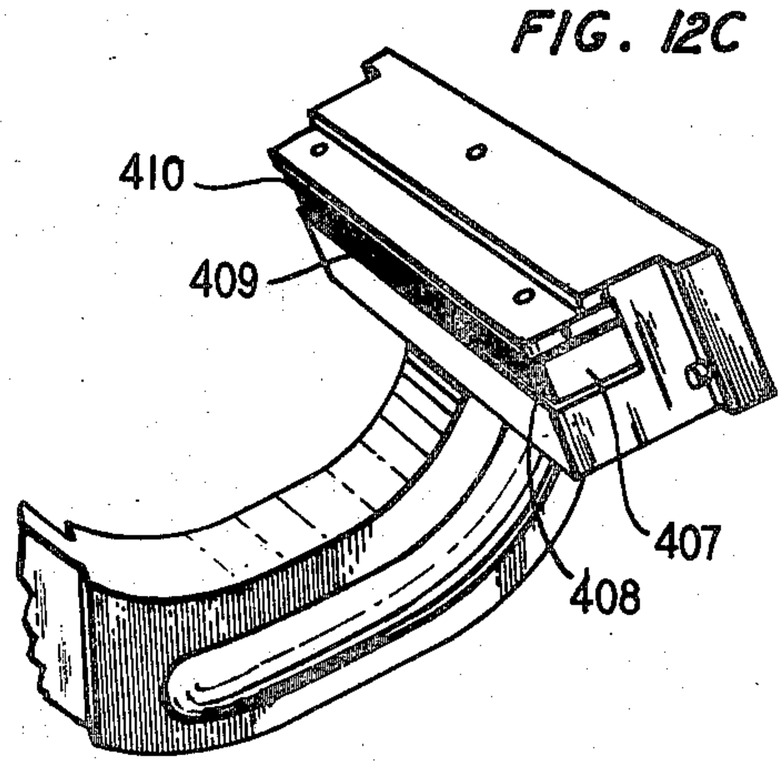

FIG. 12C

UNIVERSAL MINIATURE CONNECTOR FOR PLURAL CONDUCTORS

FIELD OF THE INVENTION

This invention relates to joining of electrical conductors; and, particularly, relates to cable splicing connections in the telephone multipair cable art.

BACKGROUND OF THE INVENTION

A wide variety of cable splicing connectors are presently used in telephone plant to perform the three basic splices of butt, bridge tap, and bridge splicing. Factors accounting for the many connector designs include differing wire gauges to be spliced, connectors designed to be used with various powered tools, need for an encapsulated splice (especially in aluminum conductor cable), modular designs to expedite wire handling and improve housekeeping, and need for ever smaller module sizes.

Given the over one billion pair splices made each year by the telephone industry and the manpower and material costs associated therewith, there is ample incentive to better systematize splicing work. Ideally, a single basic cable splicing connector to fulfill all splicing needs is desired.

SUMMARY OF THE INVENTION

Accordingly, the following are all objects of the present invention:

to provide a single cable splicing connector capable of performing all butt, bridge tap, and bridge splicing;

to accommodate aluminum and copper conductor alike in the wide range of gauges in such a basic connector;

to avoid costly post-encapsulation procedures by building encapsulation into such a connector;

to eliminate use of connectors which have no ability to accept a bridge tap;

to achieve a modular design, by which is meant a design capable of orderly spacial growth, so that wire handling is minimized and improved housekeeping results;

to reduce module size thereby holding down the overall splice bundle size in a splice case; when desired to prevent disassembling a once-assembled module, thereby to prevent reuse;

To provide a basic two-wire joint with an easily addable bridge-on feature;

to make possible use of power tooling or hand tooling for all splicing operations;

to preserve the option in such a basic-splicing connector of a reusable contact element and different reusable caps for use in terminating pairs in aparatus which requires occasional pair change and rearrangements;

to provide where desired test point accessibility; and

to preserve the option for bridge-tapping in such a basic splicing.

The above and other objects are achieved in the present invention which consists of a basic-splice unit of three parts: an index strip, a connector module, and a cap. The index strip, advantageously using alternately peaked and flat-top indexing teeth, splits the wire pairs and acts as a temporary wire holder when dressing in wires to be joined.

The connector module contains a double-ended slotted contact element. The module top is similar in design to the index strip top and performs the same functions. The connector module has two rails along its length which provide support and lock for a bridge-connector block.

Between each tooth of the index strip, to one side, a cantilever beam supports the wire against a snubbing brace of the connector module. The beam helps in the accommodating of a range of wire gauges, as from 26 through 20 gauge wires.

The connector module snap-mounts to the indexing strip. In this process the slotted beam contact element penetrates the insulation and makes contact to the wire while the connector module bears down on the wire on each side of the contact element to firmly snub it in place.

The contact element of the connector module is of the type taught for example in B. C. Ellis U.S. Pat. No. 3,496,522 issued Feb. 17, 1970. Pursuant to one aspect of the invention, however, each element may be engaged at a central thin web section, by similar contact elements arranged in a bridge-connector module which mounts to two lateral rails built along one side of the connector module. The web sections are accessible through aligned slots in the wall of the connector module and are normally fully protected with encapsulant.

Pursuant to another feature of the invention, the index strip and the connector module include wire slots having horizontally deflectable walls that further serve to grip and snub the wires to be joined in a standard butt splice. Gripping in a vertical sense of the wires dressed into the teeth of the connector module is achieved by cantilever beams built into the connector module cap. The latter snap-mounts on the connector module by the same type mechanism that snap-mounts the connector module on the index strip.

Pursuant to a further feature of the invention, the index strip, connector module and cap include vertical end grooves of a standard size that accommodate to a holder used in conjunction with either a power or a hand tool for making connections and cutting wires to length.

In using the splicing connector system of the present invention, the splicer first places the end grooves of the index strip into the guide tabs of a tool. Then, using the alternate peaked teeth of the strip, as a visual and physical guide he quickly locates and manipulates the pairs into position. The tool head is applied to the strip, snubbing the wires down into position. The tool head cuts off one set of conductor ends. Then, the connector module is placed in the same guide tabs of the tool, other wires are positioned into the connector module teeth, and the tool head is again applied to snub down the wires. The slotted beam contact in the connector module pierces insulation and electrically contacts the wires in the indexing strip and module. The ends of conductors applied to the module are cut, and the action also snap-mounts the module onto the index strip. Finally, the cap is applied through the same guide tab and is snap-mounted onto the module.

For thereafter applying a bridging connector, pursuant to another feature of the invention, the now-assembled butt splice is removed from the tool and rotated 90° and reinserted on the tool through a second set of end grooves supplied in the connector module. In this orientation, the bridge-connector mounting rails of the connector module are projected upwardly to receive the bridging cnnector.

The foregoing objects, features, and advantages of the invention as well as others not summarized above,

will be readily noted from a reading of the description to follow of an illustrative embodiment.

BRIEF DESCRIPTION OF THE DRAWING

FIG. **1** is an exploded perspective view showing the index strip, the connector module, and the module cap;

FIG. **2** is a partial isometric front view of the index strip;

FIG. **3** is a partial isometric rear view of the index strip;

FIG. **3A** is a sectional end view of the index strip;

FIG. **3B** is a rear partial view of the index strip;

FIG. **3C** is a front partial view of the index strip;

FIGS. **4A** and **4B** are exploded and slightly rotated isometric views of the two parts of the connector module, before the two parts are assembled;

FIG. **5** is a partial isometric rear view of FIG. **4B**;

FIG. **6** is a partial bottom perspective view of connector module portion shown in FIG. **4B**;

FIG. **6A** is a rear perspective view of the slotted beam contact element;

FIG. **7** is an end view of the connector module;

FIG. **8** is a bottom perspective view of the cap;

FIG. **9** is an exploded perspective view of the bridging connector showing the two components of which it is molded before their assembly;

FIG. **10** is a partial rear iosmetric view of the bridging connector;

FIG. **11** is an assembly view of the index strip connector module and cap assembled as a two-wire butt connector, showing also a bridge module and its cap assembled and ready to be placed into the butt assembly;

FIGS. **12A**, **12B**, and **12C** are various perspective views of an assembly tool in use assembling the components of the invention.

DETAILED DESCRIPTION OF AN ILLUSTRATIVE EMBODIMENT

The structure of each of the parts that in combination make up a two-wire butt assembly with bridge module will first be described, followed by a description of the operation of the connector which will include its functional features.

A two-wire butt assembly is shown in FIG. **1** as consisting of an index strip **100,** a connector module **200** and a cap **300.** This assembly connects at least one or more wires of a first group respectively to one or more wires of a second group.

INDEX STRIP

FIGS. **1, 2, 3,** and **3A–C** show the index strip **100.** It consists of a lower body designated generally **101** with a generally flat undersurface **102** and a side floor **103.** An end wall **104** rises vertically from body **101** and includes a vertical female guide slot **105.**

A plurality of spaced teeth **106** rise vertically from body **101.** Alternate teeth **106** have flattened top surfaces **107**; and the other teeth **106** have peaked cathedral roofs **108.** Each tooth **106** is set back slightly from the side edge **109** of index strip **100,** to create a narrow ledge **109a.** Each tooth **106** includes a latching nub **110** on its front surface about midway along its height.

In between each tooth **106,** and along the rear side of strip **100** are wire slots **111** formed by adjacent upright arms **112.** The arms **112** are formed by two vertical through-slots **113** in a dome-roofed riser **114** located directly behind each tooth **106** and connected thereto by a web **115.** With no conductor in the slots **111,** the arms **112** are vertical and substantially separated by a constant distance. When a conductor **241** is introduced in slot **111,** the arms **112** horizontally deflect away from each other in the vicinity of the conductor, and because of their mode of suspension, toward each other in the region above the conductor as seen in FIG. **1.** This reverse bend serves to further snub and secure a conductor such as conductor **241.**

Along the entire rear surface of index strip **100** is a platen surface **117** which has an edge notch **118.** The surface **117** serves as a conductor cutting anvil, as will be described. The region is broken periodically by slots **119** which have beveled snap-in entrance wings **120.** Each slot **119** advantageously is located laterally in line with the teeth with peaked roofs **108,** and thus out-of-line with the wire slots **111.**

FIGS. **1, 2, 3A,** and **3C** show a vertically yielding wire confining means comprising the cantilever beam **116** suspended above the side floor **103** and between each of the teeth **106,** in line with each wire slot **111,** and preferably at nominally the same level as slot **111.** Beam **116** is not attached to the adjacent walls of the teeth **106**; and has sufficient flexibility to deflect all the way into contact with the side floor **103.** Each beam **116** extends beyond the front vertical surface of the teeth **106** as seen in FIG. **3A.**

A vertical slot **121** is defined between each two webs **115,** and the adjacent interior surfaces of the riser **114** and the teeth **106.** The slot **121,** as seen in the breakout of FIG. **1** and in FIG. **3A,** extends below the level of the conductor slots **111,** to form a well **122.** The slots **121** receive conductive means such as double-ended slotted beam contact elements **219** mounted in the connector module **200,** which pierce the insulation of conductors placed in the conductor slots **111** between the upright arms **112** and the cantilever beam **116.** The well **122** may contain an encapsulant compound **99,** such as polyethylene-polybutene compound or a like nonconductive, nonflowing normally highly viscous material that protects cut wire ends against water and corrosion.

As earlier stated, the splicing connector of the present connection is modular; and advantageously may be made in, for example, five-pair modules or 25-pair modules. In the latter case, it is desirable pursuant to a further inventive feature to make each fifth tooth, such as tooth **106A** in FIGS. **3B** and **3C** wider than the others. This will avoid the inadvertent placing of a five-pair connector module on anything but the right teeth.

CONNECTOR MODULE

Numeral **200** designates the connector module, as seen in FIG. **1.** A convenient way to illustrate the complex interior structure of connector module **200** is by showing the two parts of which the module seen in FIG. **1** is made: the front part **200A** seen in FIG. **4A** and the rear part **200B** seen in FIG. **4B.** This approach teaches at the same time the presently preferred way of molding the connector module; but it should be understood that the term connector module refers to the entire module as assembled and used in practice, such as is depicted in FIG. **1.**

FIG. **5** illustrates rear part **200B** as having a rear face **201** with a lower edge **202** having a notch **203** and downwardly extending legs **204,** each with two arrowback grips **205.** The legs **204** lock into slots **119** of index strip **100.**

Rear face **201** terminates at a top edge or platen **206** which includes a notch indentation **207.** Top edge **206** serves as a conductor cutting anvil in a manner to be described. Into the top edge **207,** plural receiving slots **208** with entrance wings **209** are placed, which snap-mount latching legs **305** of the cap **300.**

Along top edge **206** are plural dome-roofed risers **210,** substantially identical to the risers **114** of index strip **100.** The dome roofs of risers **210** have chamfers **218.** The risers **210** include two vertical through-slots **211** in each, which structure creates upright arms **212.** Between each adjacent two of the arms **212** and the corresponding adjacent teeth **214** is defined a conductor slot **213.** In front of each riser **210** alternate teeth have a flattened top surface **215** while the others have a peaked cathedral-like roof **216.** Each of the teeth **214** is attached to the corresponding riser **210** by a narrow web **217.**

Advantageously, one or both sides of each cathedral roof **108** and of each cathedral roof **216** may be identically color-coded such as with the color sequence blue, orange, green, brown, slate. Color coding of the roofs **108, 216** facilitates spotting the point over which to correctly split each differently color-coded pair of conductors.

The inner recesses of connector module **200** are best explained with the aid of FIGS. **4A, 4B, 5** and **6,** beginning with the contact element **219** and its mounting.

Each contact element **219,** as depicted in FIG. **6A** and seen also in FIG. **1,** is basically an elongated conductive means comprising bifurcated end portions **223A** which define a wide-mouthed entrance to end slots **223.** The wide-mouthed entrances taper to entrance width of the corresponding end slot **223,** the latter thereafter undergoing a slowly converging taper. The thickness of the contact element is substantially reduced at each of the bifurcated end portions. The slots **223** extend toward a norrow waist section **220,** and terminate within the body of element **219** before the body begins undergoing the indentations **221.**

A series of radial or half-circle mounting surfaces **222** are molded into the module interior, at positions which place the space between adjacent half circles **222** in a plane with the conductor slots **213.** Thus, the element **219** mounts on the half-circle surfaces **222** as seen in FIG. **1,** which places its upper insulation-piercing slot **223** in line with—or facing—the conductor slot **213.** The lower insulation-piercing slot **224** is, when the module **200** is applied to index strip **100,** introduced into the well **122** so that the lower slot **224** is in line with or facing the conductor slots **111.**

The contact elements **219** mounted on surfaces **222** are housed in a loose fit, in a well **225** formed of the zone between adjacent webs **217,** the backs **212A** of adjacent upright arms **212,** and the backs **214A** of adjacent teeth **214.** The element **219** lower slot **224** extends through the tunnel **253** which is seen in FIG. **6,** and in cross-section in FIG. **1.**

As seen in FIG. **4B,** the front end floor and slot **213** constitute a snubbing surface **226** between each of the teeth **214.** An elongated top snubbing brace **227** seen in FIG. **7** having a downwardly tapering surface **228** joins the snubbing surface **226** as seen in FIG. **1.** Extending out from the brace **227** is an upper rail **229** and below this is a lower rail **230.** The rails **229, 230** receive a bridging connector pursuant to the invention, in the manner to be described. Rails **229, 230** are respectively provided with a row of spaced latching holes **231.** The vertical surface **232** between the rails **229, 230** includes a series of upright walls **233** which affords improved dielectric breakdown between contact elements of the bridging connector to be described. In the surface **232,** midway between each pair of adjacent walls **233,** and in line with the waist **220** of pin connectors **219,** there are provided bridging slots **234** with tapered entrances, as seen in FIG. **7.** The bridging slots **234** provide additional electrical access from without the assembly to each contact element **219.**

Beneath the lower rail **230** is molded the bottom snubbing brace **235** of the module **200.** Along the length of the brace **235,** latching holes **236** are spaced so that the module **200** can fit over the teeth **106** of index strip **100** and into latching engagement with the latching nubs **110** of teeth **106.**

The interior of module **200** shown in FIG. **6** includes arches **237** which are bordered by downwardly extending wire stuffers **238.** The slotted contact elements, as seen, are mounted behind the braces **227, 235.** When the connector module **200** is applied to an index strip **100** through which conductors have been dressed, the wire stuffer **238** first bears down upon each insulated conductor lodged in the slots **111,** thus to ensure that thereafter each conductor is fixably positioned for receiving contact element **219.**

Every alternate one of the arches **237** is provided with a split **239** as shown in FIG. **4B,** which accommodates a key (not shown) axially located under alternate mounting surfaces **222,** to block space between surface **222** and tooth surface **107** on index strip **100** for the purpose of maintaining dielectric strength between adjacent contact elements **219.**

Centered directly behind each wire stuffer **238** is a clearance cutout or recess **240** for the snubbed conductor, which permits each conductor end to be enclosed and surrounded by encapsulant **99** for the purpose of maintaining dielectric strength between adjacent conductors. The recesses **240** are separated by walls **243** which are molded between each of the legs **204.** An encapsulant is advantageously preplaced in recess **240.**

Opposite the notched lower edge **202** of connector module **200** is the front brace **235** which acts as a snubbing bar and has an inwardly facing bevel surface **242.**

As seen in FIG. **3A,** the index strip cantilever beams **116** extend beyond the forward edges of the teeth **106.** When th module **200** is pressed down on the index strip **100,** the brace **235** effects bending contact with insulated conductors such as **241** resting on the beams **116,** deflects the beams **116** and the conductors downwardly until the latching holes **236** lock onto the latching nubs **110** of the strip **100.** At this point, the conductor **241** is firmly snubbed by the brace **235.**

The connector module **200** includes vertical female guide grooves **244** at either end which enable the module **200** to mount in the bed of a hand- or power-operated splicing tool with the teeth **214** pointing upwardly, as will be described. A horizontal female guide groove **245** is also formed in the sides of module **200** to enable mounting in a tool bed so that the bridge connector mounting rails **229, 230** face upwardly.

As with the index strip teeth **106,** every fifth tooth of the module teeth **214** is widened (not illustrated) to help avoid placing the cap **300** improperly. Each of the teeth **214** is provided with latching nubs **246.**

It would be appreciated that in FIG. 4A the detail denoted 247 that resembles a space capsule, and the L-shaped grooves 248 are merely molding details to facilitate assembly of the two parts, 200A, 200B by insertion of the detail 247 into the like-shaped holes 249. The tongues 250 of part 200B, shown in FIG. 6, lodge in the grooves 248. The plug portions 251 of detail 247 will upon assembly with their female counterparts protrude through the assembly holes 252 seen in FIG. 5. The plugs 251 thereafter will be rendered flush with the surface of the rear face 201 of the module. Obviously, other ways may be devised by persons skilled in the molding art to construct the connector module.

CAP STRUCTURE

The cap designated 300 and seen in FIGS. 1 and 8 consists of a generally flat roof 301 with a longitudinal groove 302 which accommodates a tool-cutting or compression blade. A vertical guide groove 303 in each end is received in a tool-mounting fixture when the cap is to be assembled to the connector module 200.

The bottom rear edge 304 of cap 300 is continuous except for legs 305 each of which include a pair of arrowback grips 306. The legs 305 fit into receiving slots 208 of the connector module 200. The notched indentation 207 of the module 200 is contacted by edge 304 and by the offset regions 307 directly above it. On either side of each leg 305, the offset regions are extended into a wire recess 308, each of which falls in line with a respective conductor slot 213 of the module 200. Above each wire recess 308 is a wire stuffer 309 formed by a downwardly depending rib whose bottom surface 310 is planar with the top roof 311 of each recess 308. Encapsulating sealant 99 is preplaced in the interior cavities of cap 300, including recess 308, wells 315, and in the regions below beams 316.

When the cap 300 is in place on module 200, the module's risers 210 are accommodated in the chambers of cap 300 that are defined between each stuffer 309 and slanted roof portions 312, which latter contact the chamfers 218 of the dome of risers 210.

Along the forward wall 313 of cap 300 are plural-spaced latching holes 314 similar in purpose and function to the latching holes 236 of the module 200. The bottom edge of forward wall 313 includes spaced wells 315 which receive a beam 316 that deflects when coming in contact with a conductor present on snubbing surface 226 of module 200. The deflecting beam 316 is the same in purpose and basic structure as the beam 116 of index strip 100.

OPERATION OF INDEX STRIP, CONNECTOR MODULE AND CAP

The two-wire butt assembly that is shown assembled in FIG. 11 is pieced together with the aid of a tool such as depicted in FIGS. 12A, 12B, and 12C. The tool designated 400 consists essentially of a base or platen 401 with a longitudinal slot 402 that is just wide enough to snugly receive the width of index strip 100. Rising normally from the slot 402 are ribs 403 which engage the female guide slots 105 of index strip 100, then the guide groove 244 of the module 200, and finally the guide groove 303 of cap 300. To assure a tight fit, the ribs 403 can be spring-loaded (springs not shown).

A head 405 is pivotally attached to the base 401 by pivot arm 406. Head 405 mounts a boss bar 407 from the bottom edge 408 of which extend plural bosses 409. Behind the boss bar is mounted a blade 410 that advantageously is extensible beyond the bosses, or retractable.

For assembly, an index strip 100 is placed as described in the tool base 401 with its teeth 106 facing upwardly. Then, insulated conductors 241 are loosely placed in the conductor slots 111 between the upright arms 112 and between the corresponding spaced teeth 106.

With all conductors in place, the head 405 is pivoted into position above the strip 100, and the boss bar 407 is forced downwardly, the spaced bosses 409 pressing each respective insulated conductor 241 fully down in its slot 111 and causing the arms 112 to horizontally yield. The extent of boss penetration is limited by contact of the boss bar bottom edge 408 on the flattened top surfaces 107 of strip 100.

Toward the end of the downward stroke, the blade 410 severs the conductors on surface 117 which serves as a cutting anvil as in FIG. 3. The head 405 then is pivoted away, and a connector module 200 is placed on the tool guide ribs 403 and brought down into contact with strip 100. The tool head 405 is again swung into position and brought down.

Pressing against the connector module 200 flattened top surfaces 215, the head 405 first causes the lower insulation-piercing slot of each element 219 to engage the conductors 241 by slicing through the outer insulation and effecting firm compliant electrical and mechanical connection to the underlying wire. As this connection is made, toward the end of the downward stroke of head 405, the legs 204 snap into the slots 119 of strip 100. Similarly, the latching nubs 110 engage the latching holes 236 of module 200, thus achieving in this dual fashion a permanent engagement of the module 200 to the underlying strip 100. During this procedure, sealing compound preplaced in connector module 200 cavities formed by surfaces 253, 254, 255 of the connector module end and preplaced also in slot 121 of index strip 100, is displaced and surrounds the electrical connection.

The assembly tool head 405 is again raised and swung back. The splicer uses the cathedral roofs 216 of module 200 to split his pairs, just as he used the cathedral roofs 108 of strip 100 to do likewise.

Thus, conductor pairs to be selectively connected to those now mounted on index strip 100 are assembled onto module 200 in exactly the manner described for the assembly of conductors onto strip 100. The boss bar 407 similarly is then engaged to snub down the conductors on their snubbing surfaces 226, thus effecting connection between these conductors and the upper insulation-piercing slot 223. The blade 410 severs the conductor ends, using surface 206 as a cutting anvil.

The head 405 is again retracted, and a cap 300 is placed on ribs 403. The final downward stroking of head 405 brings the vertically deflecting beam 316 into engagement with the conductors. Beam 316 puts a snubbing bend in each conductor by causing it to press against snubbing surfaces 226, brace 227 and upper rail 229. Finally, the legs 305 of cap 300 snap into receiving slots 208 of module 200; and the latching nubs 146 engage the latching holes 314 of the cap 300.

Additionally, the cantilever beam 116 acting at one point of a conductor 241, and the horizontally deflecting upright arms 112 acting at a close second point of the conductor provide rigid support of the conductor

in the vicinity to each side of the contact element **219**, thus preventing motion of the conductor in the area to be contacted.

An alternative tool operation could be to put the connector module **200** on the guides over the index strip **100**, then dress the wires into the top of the connector module and then press the connector module onto the index strip, seating and cutting the wires in this operation.

A further inventive embodiment is illustrated with the aid of portions of FIGS. **6** and **8**. A blade which performs the function of the tool blade **410** is added directly into the connector module. As seen in FIG. **6**, a blade **260** fits into a slot **261** of the module **200** so that the blade outer surface is substantially flush with the interior surface of legs **204**. The edge **262** is also flush with the same surface, and extends about **40** mils below the wire sutffers **238**.

Similarly, in FIG. **8**, a blade **320** is mounted into a slot **321** of cap **300** with the blade outer surface flush with the interior surface of the legs **306**, and with the blade edge **322** extending about **40** mils below the wire stuffer bottom surface **310**.

The blades **260** and **320** advantageously may be made of a ceramic or glossy material, or an equivalent, that is hard enough to slice relatively ductile metal, sufficiently nonbrittle, and has good insulative and dielectric properties. The blades may be adhered to the mounting slots by a suitable adhesive.

It should be apparent from the foregoing discussion that the connector module upright arms **212** and the index strip upright arms **112** are each rigidly supported at a top and a bottom end. The wire slots which they thus serve to define are made so that the presence therebetween of an insulated conductor of greater diameter than the nominal arm separation causes the arms to retract at the contact zone. Elsewhere, the arms grippingly close over the conductor, as in a reverse bend shown in FIG. **1**.

Depending on the wire gauge size, when the module **200** has snap-mounted into place, the beams **116** may actually be in contact with the index strip side floor **103**; and the insulation of the conductors **241** may actually be deformed.

The operation of the lower brace **235** and the index strip cantilever beam **116** is to grippingly accommodate different conductor guages with varying degrees of deflection of the beam **116**. This is due in part to the cantilever beam being suspended from an interior position outwardly between adjacent teeth at a nominal at-rest position above the interior floor. The same operation holds true with respect to the interaction of deflecting cantilever beams **316** of cap **300** and the snubbing surface **226** of module **200**.

The index strip **100**, connector module **200** and cap **300** advantageously may be made by plastic molding procedures known to the art. Materials of which each may be made include polycarbonate, polyamide, or a polystyrene or related polymer such as ABS resin, all of which provide good mechanical strength and rigidity as well as adequate electrical insulation.

BRIDGE CONNECTOR

As seen in FIGS. **9** and **10**, a convenient way to illustrate the structure of the optional bridge connector is by showing the two parts **500A** and **500B** of which the connector is made. The bridge connector designated **500** consists of a rear surface **527** with a platen **515** running from one end wall **505** to a second end wall not shown. An edge notch **514** is provided in platen **515**, as well as slots **516** with snap-in entrance wings **528**. Latching nubs **525** are formed both on rear surface **527** and on front surface **529** shown in FIG. **9**.

Conductor slots **530** opening onto platen **515** are formed between adjacent domed roof risers **508**. Two vertical slots **509** in each riser **508** form horizontally yielding flexible arms **510** which yield to conductors in the manner described with respect, for example, to arms **212** of connector module **200**.

Forward of each riser **508** is a tooth **501**, joined to the corresponding riser **508** by a web **507**. A well **511** is formed by adjacent webs **507**, the backs **510A** of adjacent upright arms **510**, and the backs **501A** of adjacent teeth **501**. The well **511** is similar to the well **225** shown in FIG. **1**, and is for the purpose of mounting and housing double-ended slotted metallic contact element **504** which may for example, be similar to the element **219** shown in FIG. **1** and in FIG. **6A**. The element **504** mounts on adjacent half-circle mounting surfaces **523**.

The holes **520** are for the purpose of bleeding encapsulant during assembly. The two pieces **500A** and **500B** are advantageously molded separately, and then joined by insertion of molding ribs **519** into mounting grooves **523**, with the half circles **522** fitting through the circular openings **524** formed between adjacent downwardly extending ribs **513**.

The conductor slots **530** are substantially at the same level as a floor **526** which is adjacent to each tooth **501**. On the outboard side of each tooth **501**, are latching nubs **512**. Each alternate tooth **501** has a peaked cathedral roof **503**; and the in-between teeth **501** have flattened top surfaces **502**.

A snubbing brace **517** with an inwardly facing bevel **518** is situated next to the floor **526** between each two adjacent teeth **501**. The bevel **518** tends upwardly from floor **526**.

Pursuant to another aspect of the invention, a cap identical to the cap **300** snap-mounts onto bridge connector **500** by engagement of slots **516** by legs **305** and of nubs **512** by latching holes **314**. The action of deflecting beam **316** on a conductor **541** in slot **530** is the same as has already been described in earlier mention of beam **316**. Likewise, with the cap **300** snap-mounted in place, the brace **517** snubs the conductor **541** and the wire stuffer **309** of cap **300** stuffs conductor **541** into the slot **530**.

The pin connector ends **504A** of connector **504** extend downwardly and out beyond the lower edge **506**, as seen in FIG. **11**. Engagement of bridge connector **500** onto connector module **200** is by latching of nubs **525** into the latching holes **231**, with the ends **504A** extending through the bridging slots **234** and into gripping contact with the narrow waist **220** of the connector module contact element **219**.

It is to be understood that the embodiments described herein are merely illustrative of the principles of the invention. Various modifications may be made thereto by persons skilled in the art without departing from the spirit and scope of the invention.

What is claimed is:

1. Apparatus for connecting two insulated conductors comprising:

indexing means comprising:

first wire slot means,

first vertically yielding wire confining means in line with said first wire slot means,
well means between said first wire slot means and said first wire confining means,
connector module means comprising:
second wire slot means,
top snubbing means and bottom snubbing means,
double-ended conductive means mounted with its second end disposed across said second wire slot means,
means for mounting said connector module means on said indexing means so that said conductive means first end extends into said well means and across said first wire slot means, said bottom snubbing means forcing an insulated conductor against said first wire confining means, and
cap means comprising:
second vertically yielding wire confining means, and
means for mounting said cap on said block means, said top snubbing means forcing an insulated conductor against said second wire confining means.

2. Apparatus for connecting two insulated conductors comprising:
indexing means comprising:
first horizontally yielding wire slot means,
first vertically yielding wire confining means in line with said first wire slot means,
well means between and extending below said first wire slot means and said first wire confining means,
connector module means comprising:
second horizontally yielding wire slot means,
top snubbing means and bottom snubbing means,
double-ended slotted beam connector means mounted behind both said snubbing means with the beam second end slot disposed across said second wire slot means,
means for mounting said connector module means on said indexing means so that said beam first end slot extends into said well means across said first wire slot means so that said bottom snubbing means forces an insulated conductor against said first wire confining means causing the latter to resiliently yield;
first stuffing means for forcing an insulated conductor into said first wire slot means, and
cap means comprising:
second wire stuffing means for forcing an insulated conductor into said second wire slot means,
second vertically yielding wire confining means in line with said second wire slot means, snubbing means for mounting said cap means on said connector module means so that said top snubbing means forces an insulated conductor against said second wire confining means causing the latter to resiliently yield.

3. Apparatus for connecting at least one or more wires of a first group respectively to one or more wires of a second group, comprising:
indexing means comprising:
first wire slot means defined by adjacent flexible arms for receiving a first wire from said first group,
first cantilever beam means mounted in line with said first slot means, and

well means between and extending below said slot means and said beam means,
connector module means comprising:
second wire slot means defined by adjacent flexible arms for receiving a second wire from said second group,
a top snubbing brace and a bottom snubbing brace,
double-ended slotted conductive means mounted behind and crosswise of said braces, with its second end slot facing said second wire slot means,
means for mounting said connector module means on said indexing means so that said conductive means first end extends into said well means with its first end slot facing said first wire slot means and so that said bottom brace snubs said first wire when disposed in said first wire slot means against the yielding said first beam means, and first wire stuffing means for forcing said first wire into said first slot means, and
cap means comprising:
second wire stuffing means for forcing said second wire into said second wire slot means when disposed therein,
second cantilever beam means mounted in line with said second wire stuffing means, and
means for mounting said cap means on said connector module means so that said top brace snubs said second wire against the yielding said second cantilever beam means.

4. Apparatus pursuant to claim **2** wherein said indexing means further comprises:
an interior floor,
upright spaced teeth rising from said floor between said wire confining means, and
means mounting said wire confining means above said floor for yielding movement toward said floor.

5. Apparatus pursuant to claim **4,** wherein each said first wire confining means comprises a cantilever beam suspended from an interior support and extending over said floor beyond said teeth.

6. Apparatus pursuant to claim **5,** wherein said connector module means further comprises:
an interior floor, and
upright teeth rising from said floor with spaces thereinbetween each corresponding to a respective said second wire slot means.

7. Apparatus pursuant to claim **6,** wherein each said second wire confining means comprises a cantilever beam suspended from an interior point in said cap and wherein said cap means further comprises cavities between each two adjacent said cantilever beams to accommodate said connector module teeth when said cap is mounted on said connector module means.

8. Apparatus pursuant to claim **2,** wherein each said first and said second wire slot means comprise adjacent horizontally yielding arms each rigidly supported at a top and a bottom end so that the presence therebetween of an insulated conductor of greater diameter than the nominal arm separation causes the arms to retract at the contact zone and elsewhere to grippingly close over said conductor.

9. Apparatus pursuant to claim **7,** wherein each said first and said second wire slot means comprises adjacent horizontally yielding arms each rigidly supported at a top and a bottom end so that the presence therebetween of an insulated conductor of greater diameter than the nominal arm separation causes the arms to re-

tract at the contact zone and elsewhere to grippingly close over said conductor.

10. Apparatus pursuant to claim **9** wherein the top of each said arm curves outwardly at said slot entrance to form a wide-mouthed slot entrance.

11. Apparatus pursuant to claim **2,** wherein each said first wire confining means comprises a cantilever beam suspended from a support adjacent said well and said indexing means further comprises:

an interior floor,

upright spaced teeth rising from said floor the backs of adjacent said teeth defining an extension of said well, said cantilever beam being suspended freely between adjacent said teeth outwardly above said interior floor, thereby to grippingly accommodate different conductor gauges with varying degrees of deflection of said beam.

12. Apparatus pursuant to claim **3,** wherein said double-ended slotted conductive means further comprises a central narrow waist section and said apparatus further comprises means for effecting bridging connection of one or more wires of a third group to respective ones of said central narrow waist sections.

13. Apparatus pursuant to claim **3,** wherein said connector module means further comprises:

upper and lower side rails extending outwardly respectively from said top and bottom snubbing braces and defining therebetween an elongated exterior surface, and

slot means through said exterior surface, each extending to a point adjacent the central section of a respective one of said double-ended slotted conductive means, thereby to provide additional electrical access from without said apparatus to each said conductive means.

14. Apparatus pursuant to claim **13** wherein said central section of each said slotted conductive means comprises a narrow waist,

said rails each include latching holes, and

said apparatus further comprises bridge connector means comprising a bridging block, and double-ended slotted contact elements mounted in said block for engagement of first end slots with respective said narrow waists.

15. Apparatus pursuant to claim **14** wherein said bridge connector means further comprises third wire slot means defined by adjacent flexible arms, the second said end slots of said slotted conductive means facing said third wire slot means.

16. Apparatus pursuant to claim **15,** wherein said bridge connector means further comprises:

upright teeth with spaces therebetween, each space corresponding to a respective said third wire slot means, and

a third snubbing brace disposed outwardly of said teeth, and

second cap means comprising:

third wire stuffing means each for forcing a wire to be connected to a respective said contact element second end slot into a respective said third wire slot means, and

third cantilever beam means mounted in line with said third wire stuffing means, and

means for mounting said cap means on said bridge connector means so that said third snubbing brace snubs said wires against said third cantilever beam means.

17. Apparatus pursuant to claim **16** wherein said bridge connector means further comprises latching nub means for engaging said latching holes in each said rail.

18. Apparatus pursuant to claim **6,** wherein the teeth of said indexing means and said connector module means are alternately flat-topped and peak-topped.

19. Apparatus pursuant to claim **4,** wherein said index strip teeth further comprise latching nubs and said lower brace further comprises corresponding latching holes for grippingly engaging said nubs thereby to snap-mount said index strip means on said connector module means.

20. nodule means. pursuant to claim **6,** wherein said connector module means teeth further comprise latching nubs and said cap means comprises an exterior forward wall with corresponding latching holes for grippingly engaging said last-named nubs thereby to snap-mount said cap on said connector module means.

21. Apparatus pursuant to claim **4** wherein said index strip comprises a vertical female guide slot in each of its two end walls for sliding engagement with a male guide member of an assembly tool.

22. Apparatus pursuant to claim **21** wherein said connector module means and said cap means each comprise a vertical female guide slot in each of their respective two end walls for sliding engagement with a said assembly tool male guide member.

23. Apparatus pursuant to claim **22** wherein said connector module means further comprises a horizontal female guide slot in each of its said two end walls for sliding engagement with said assembly tool male guide member.

24. Apparatus pursuant to claim **3,** wherein said connector module means comprises open chambers substantially surrounding each said conductive means first end slot, and viscous encapsulating means filling said chamber.

25. Apparatus pursuant to claim **24** wherein said cap means comprises open chambers adjacent each said second wire stuffing means, and viscous encapsulating means filling each said chamber.

26. Apparatus pursuant to claim **3,** wherein said means for mounting said connector module means on said indexing means comprises: a platen extending outwardly from the exterior side of said adjacent flexible arms of said index strip means, said platen having an edge notch therein, plural receiving slots extending downwardly from said platen, each slot having narrow entrance wings and relatively wider recesses therebeneath, and plural correspondingly shaped legs extending from the lower edge of said connector module, each for snapping engagement with one of said index strip receiving slots.

27. Apparatus pursuant to claim **26,** wherein said means for mounting said cap means and said connector module means comprise a platen extending outwardly from the exterior side of said adjacent flexible arms of said connector module means, said platen having an edge notch therein, plural receiving slots extending downwardly from said platen, each slot having narrow entrance wings and relatively wide recesses therebeneath; and plural correspondingly shaped legs extending from a lower edge of said cap means each for snapping engagement with one of said connector module means receiving slots.

28. Apparatus pursuant to claim **12,** wherein said conductive means comprises bifurcated end portions

defining an entrance to each said end slot, said end portions having a relatively wide entrance that tapers to the entrance width of said end slot, the latter having a relatively narrow entrance width and a converging taper, the thickness of said conductive means being substantially reduced at each said bifurcated end portion.

29. Apparatus pursuant to claim 28, wherein each said conductive means end slot extends toward said waist section a substantial distance, the width of said conductive means being undiminished along all of said substantial distance.

30. Apparatus pursuant to claim 18 further comprising color coding of the peak-topped teeth of said index strip means and of said connector block means.

31. Apparatus pursuant to claim 3, wherein said top and bottom snubbing braces each comprise inwardly facing bevel surfaces for effecting bending contact with insulated conductors.

32. Apparatus pursuant to claim 23, wherein said cap means comprises a flat roof and said flat roof includes an indentation along and inwardly of an entire edge, said indentation comprising a bearing and guide surface for receiving a compression element of an assembly tool.

* * * * *

UNITED STATES PATENT OFFICE

CERTIFICATE OF CORRECTION

Patent No. 3,772,635 Dated November 13, 1973

Inventor(s) Dean R. Frey, Robert W. Henn, Donald T. Smith, Arthur G. Vedejs

It is certified that error appears in the above-identified patent and that said Letters Patent are hereby corrected as shown below:

Column 8, line 62, after "nubs" change "146" to --246--.

Claim 2, line 53, after "slot means," cancel "snubbing".

Claim 20, line 13, after "20." at the beginning of the line cancel "module means" and insert --Apparatus--.

Signed and sealed this 9th day of April 1974.

(SEAL)
Attest:

EDWARD M.FLETCHER,JR.
Attesting Officer

C. MARSHALL DANN
Commissioner of Patents

USCOMM-DC 60376-P69
☆ U.S. GOVERNMENT PRINTING OFFICE : 1969 O—366-334