United States Patent [19]

Hennessey et al.

[11] **3,772,634**

[45] **Nov. 13, 1973**

[54] **MOUNTING BRACKET FOR DISPLAY PANEL**

[75] Inventors: **William M. Hennessey,** Somerville; **Hector R. Schorno,** Rockaway, both of N.J.

[73] Assignee: **Burroughs Corporation,** Detriot, Mich.

[22] Filed: **May 15, 1972**

[21] Appl. No.: **253,350**

[52] **U.S. Cl.**..... **339/65,** 339/75 MP, 339/176 MP

[51] **Int. Cl.**..... **H01r 13/62**

[58] **Field of Search** 339/17, 65, 66, 75, 339/125, 126, 176

[56] **References Cited**

UNITED STATES PATENTS

3,193,791	7/1965	Bock et al.	339/65
3,487,350	12/1969	Hammell	339/17 C
3,008,113	11/1961	Johnson	339/65
3,451,034	6/1969	Beale	339/75 MP
3,636,503	1/1972	Bernutz et al.	339/17 LC
3,663,925	5/1972	Proctor	339/65

Primary Examiner—Joseph H. McGlynn
Attorney—Kenneth L. Miller et al.

[57] **ABSTRACT**

The bracket includes an elongated base member having a series of first apertures for receiving (1) metallic connectors for making electrical contact with the electrodes of a display panel, and for receiving (2) a pair of alignment members for properly aligning the panel when it is coupled to the bracket. The elongated base member also includes an array of second apertures which are adapted to receive a plurality of vertical support members which are constructed so that they can be secured to a printed circuit board or the like. The vertical members can also be provided with movable arms for engaging and holding the display panel. The base member and the upright members are designed so that two base members can be connected together in series, and they can be held together mechanically by an upright member which engages both base members simultaneously.

25 Claims, 18 Drawing Figures

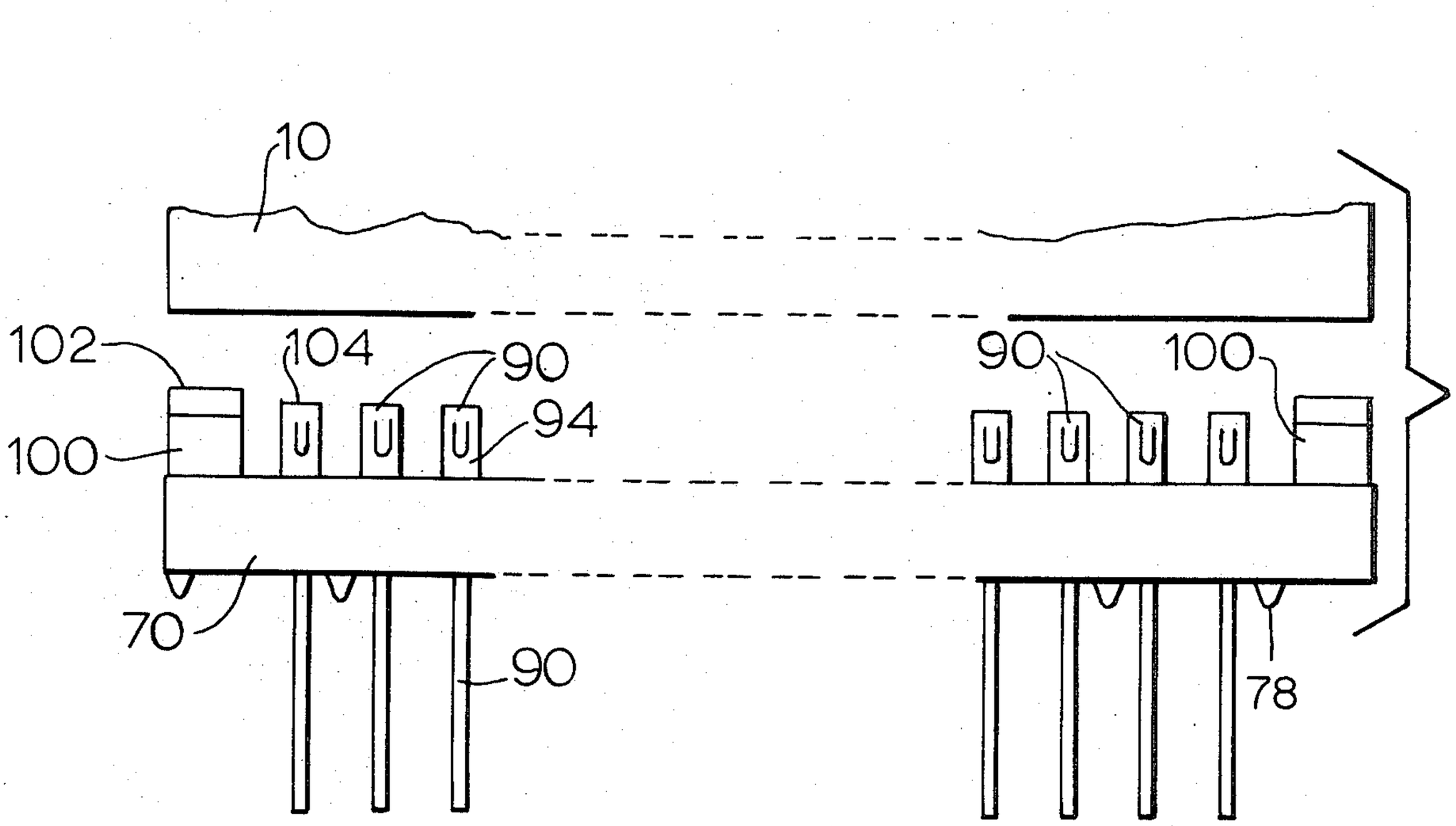

Fig. 1

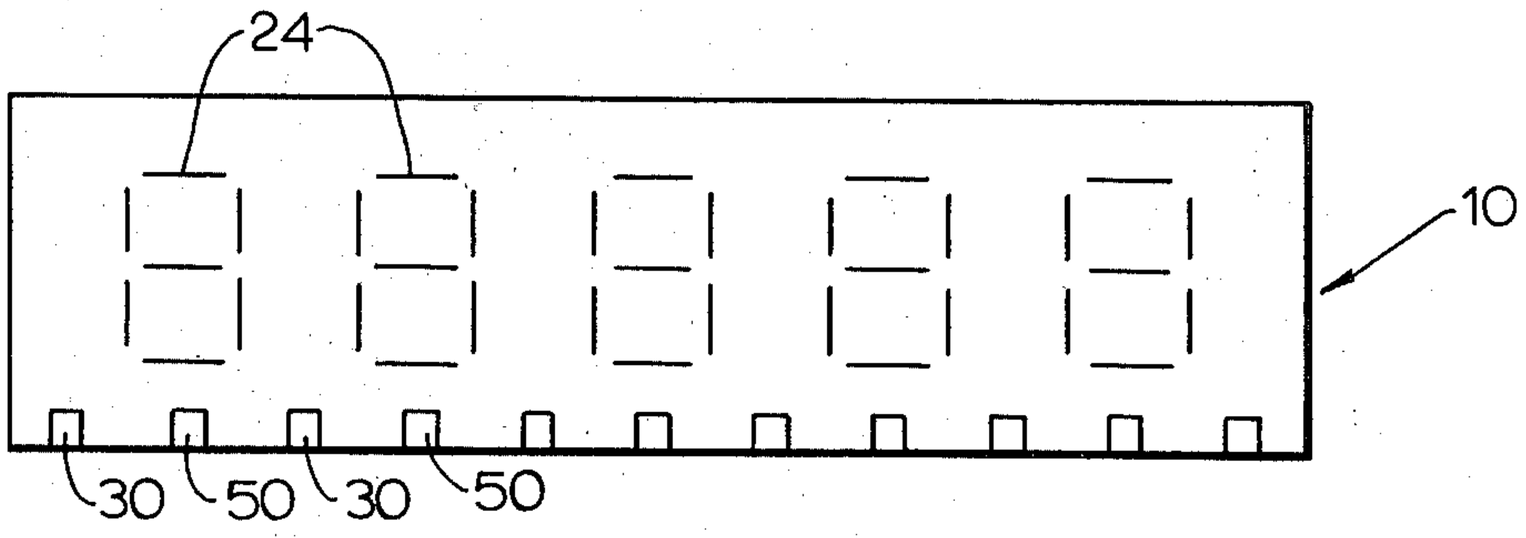

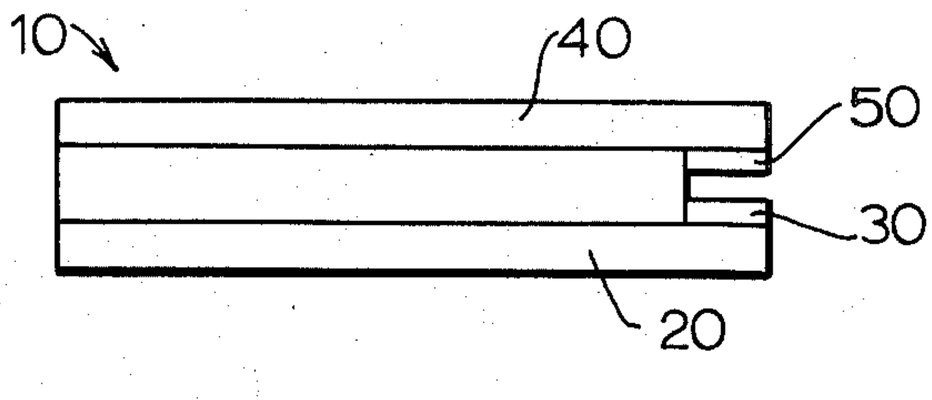

Fig. 2

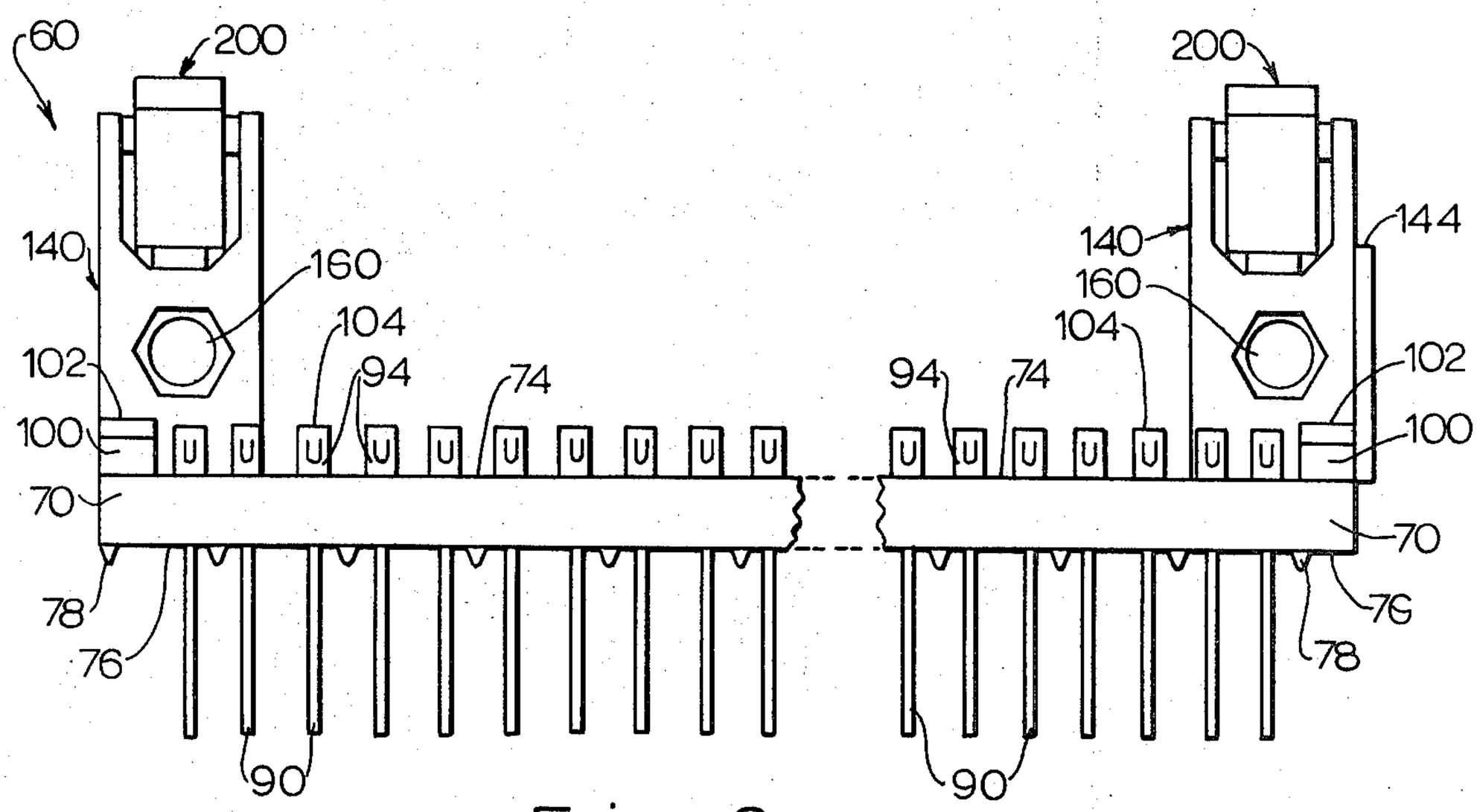

Fig. 3

Fig. 4

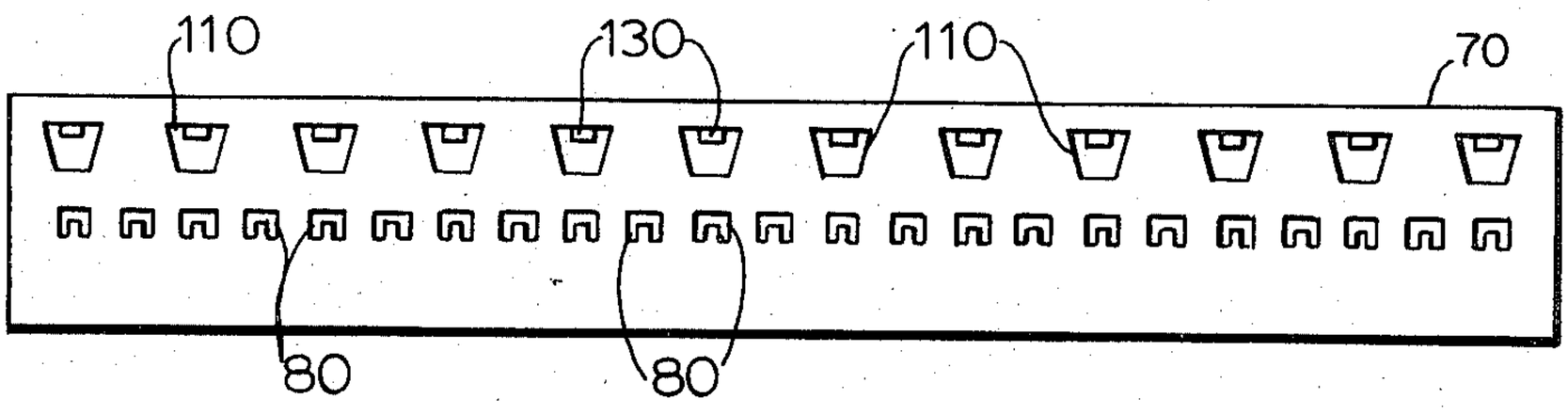

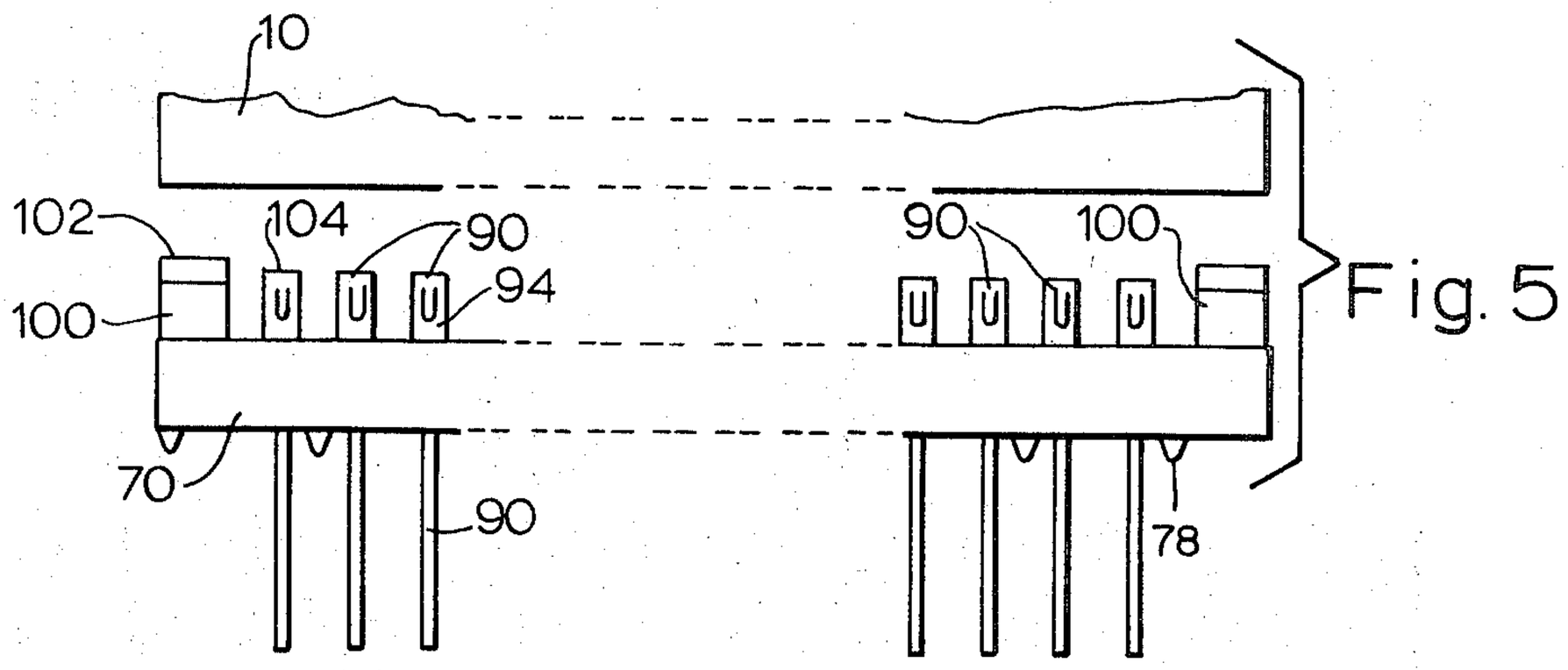

Fig. 5

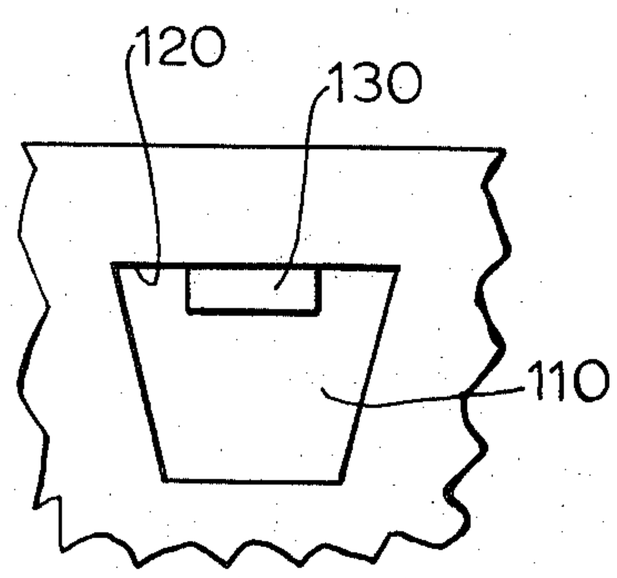

Fig. 6

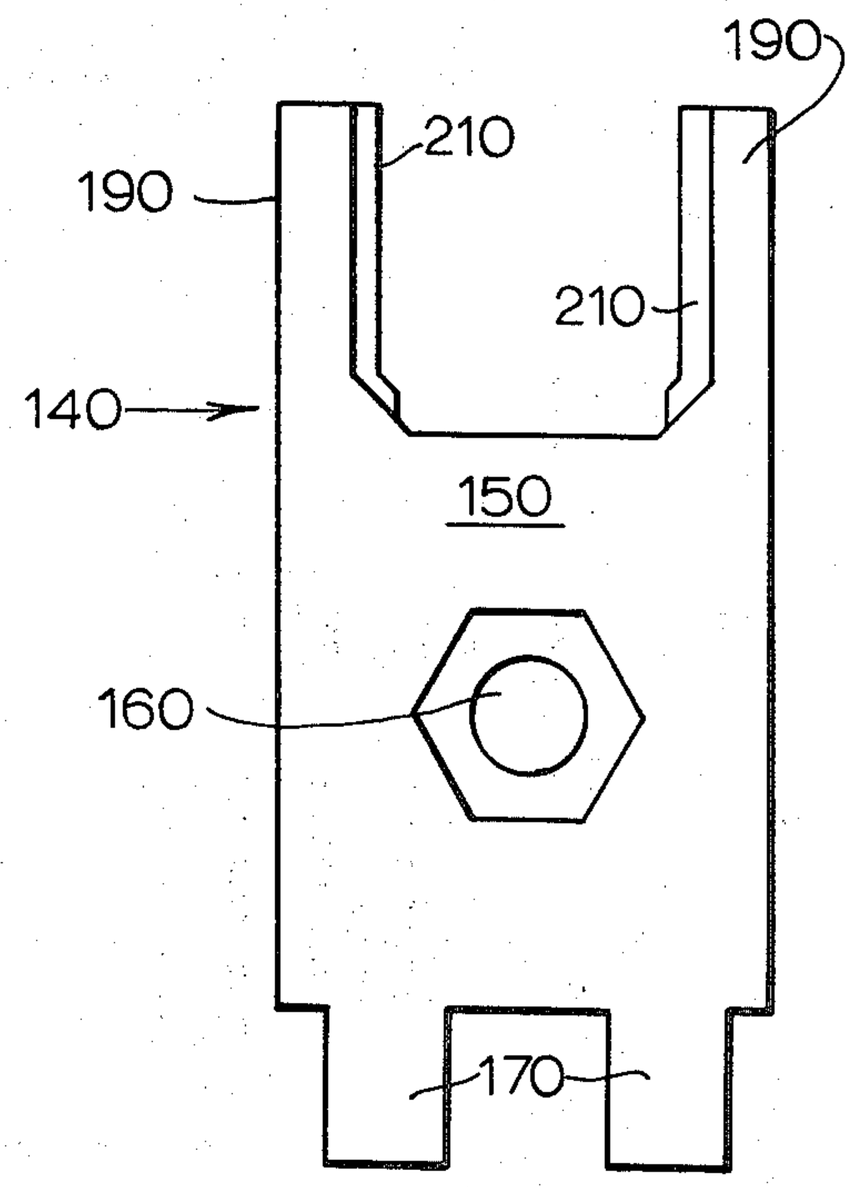

Fig. 7

Fig. 8

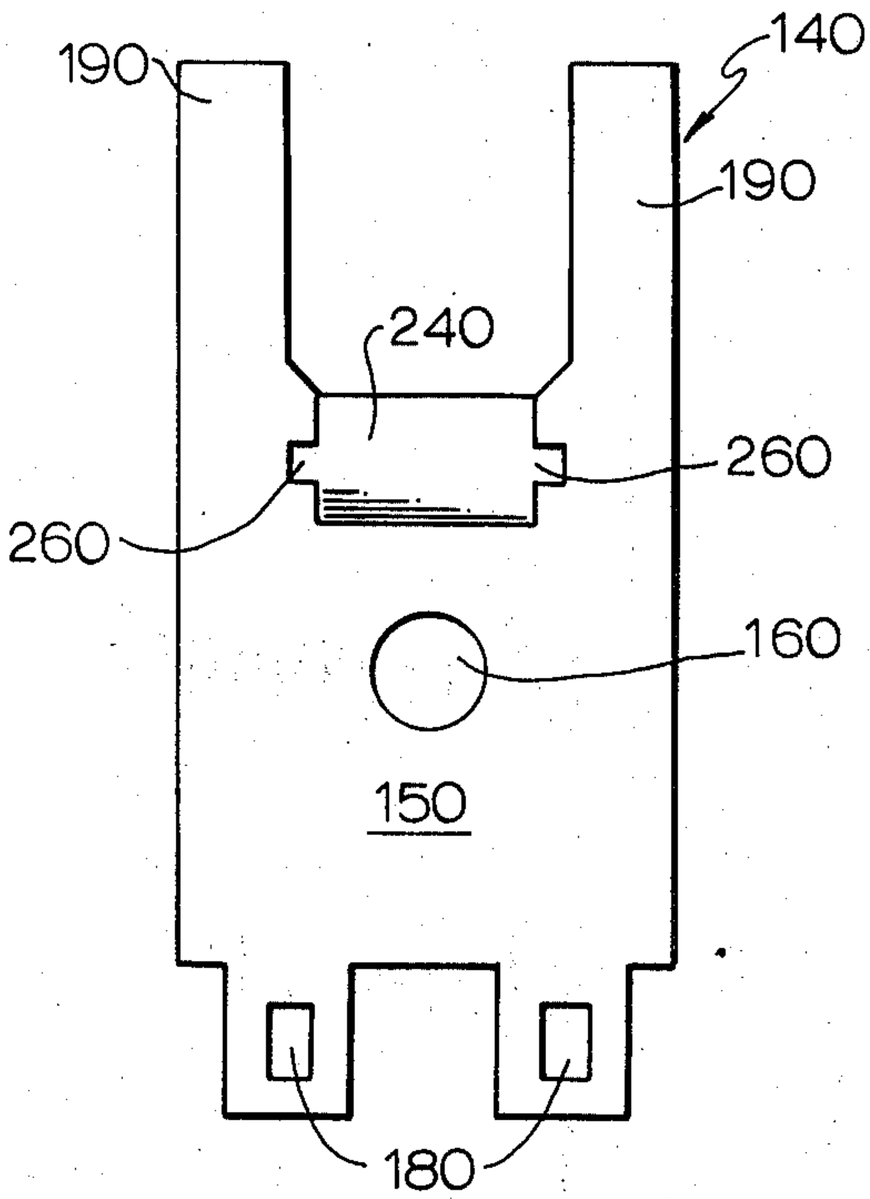

Fig. 9

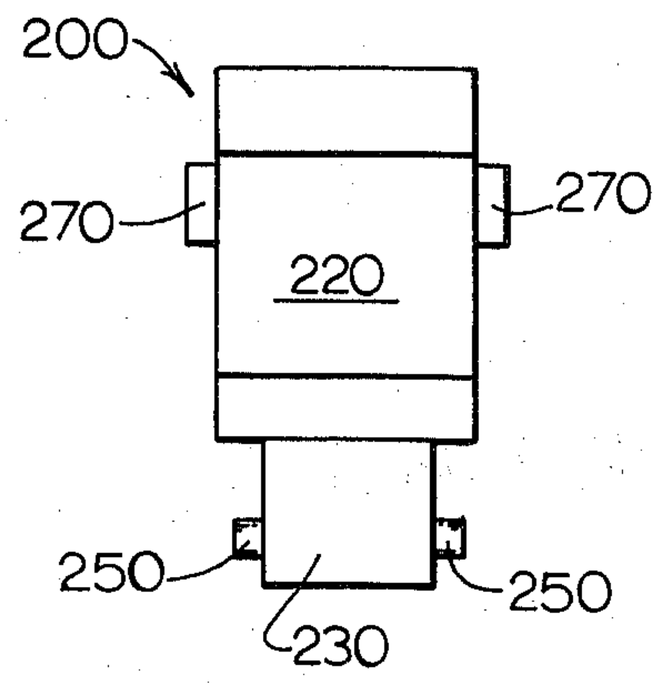

Fig. 10

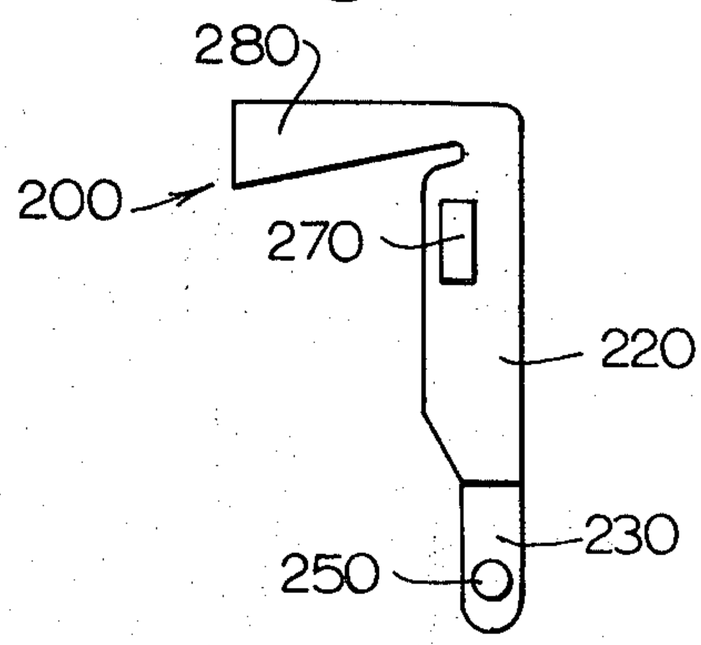

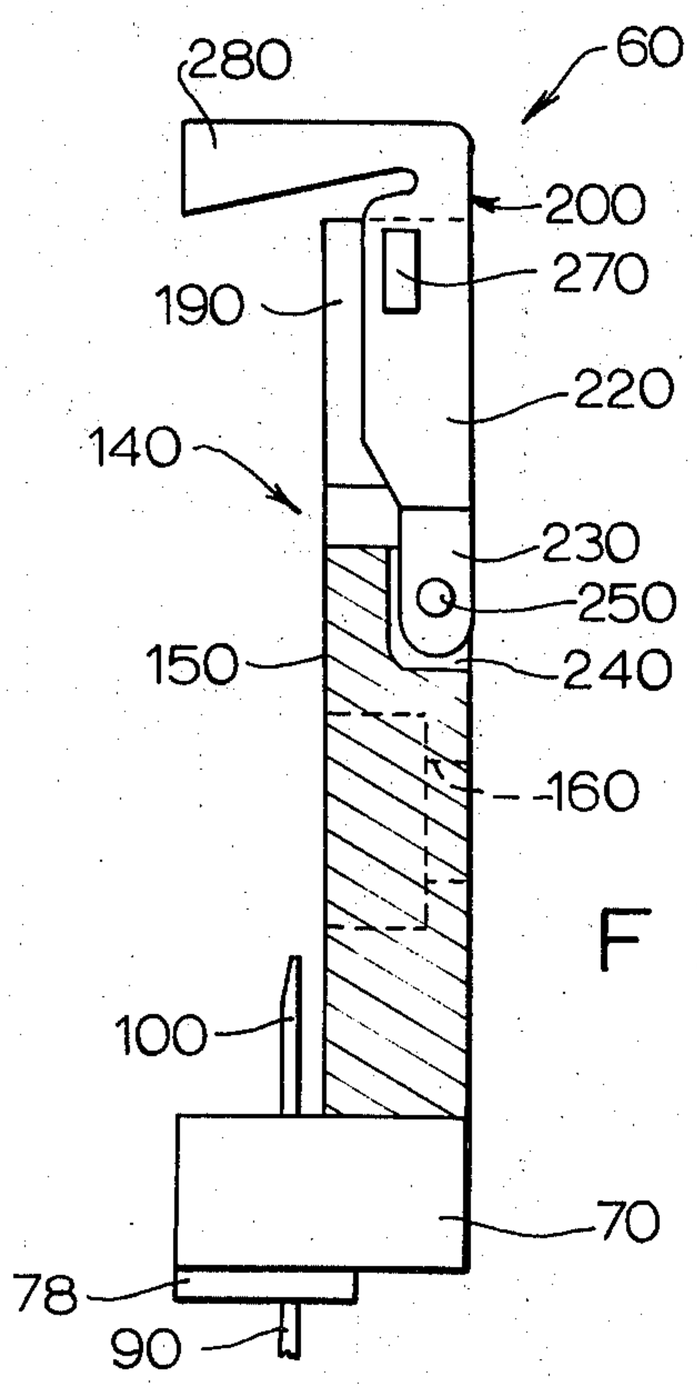

Fig. 11

Fig. 12

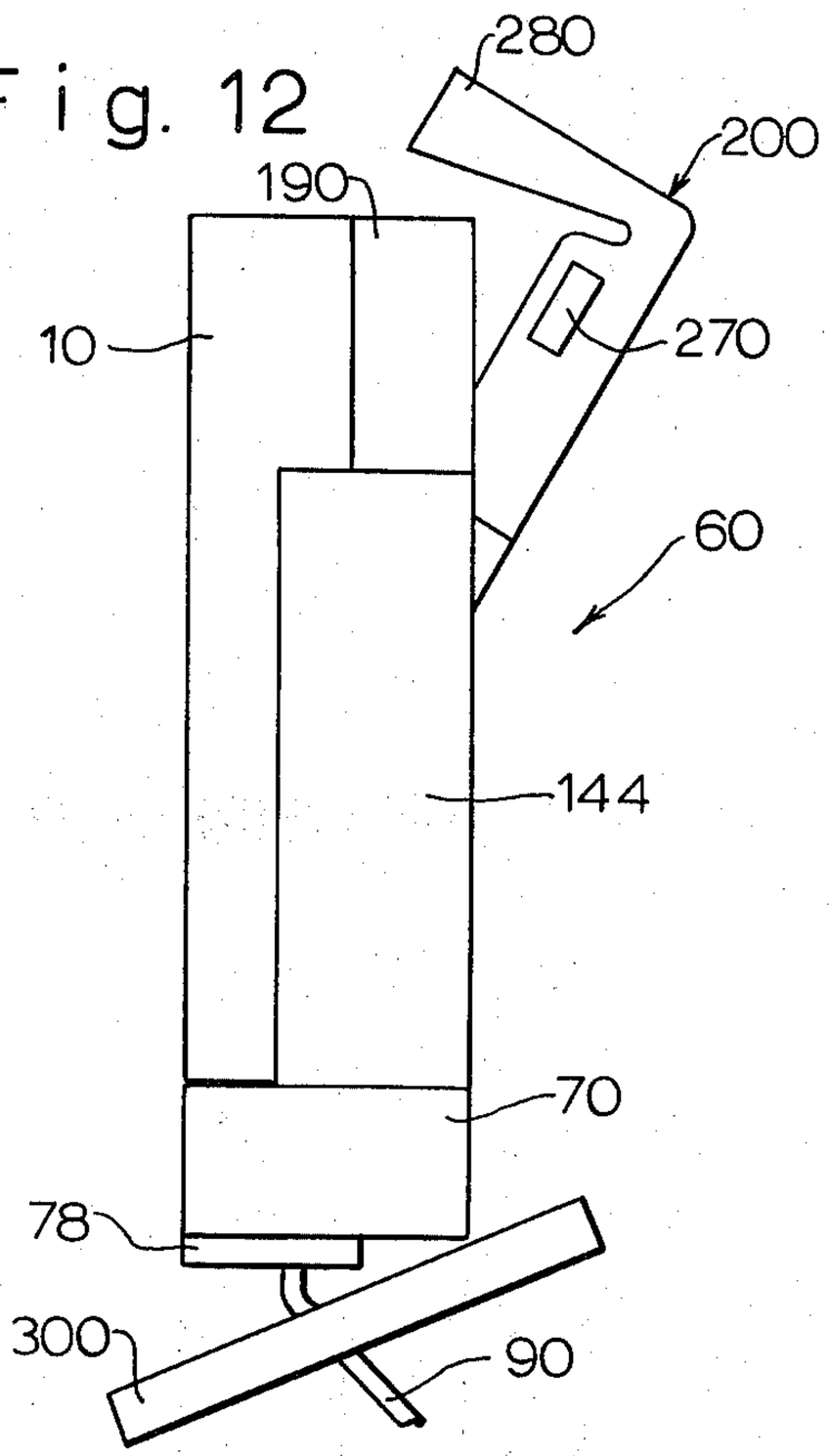

Fig. 13

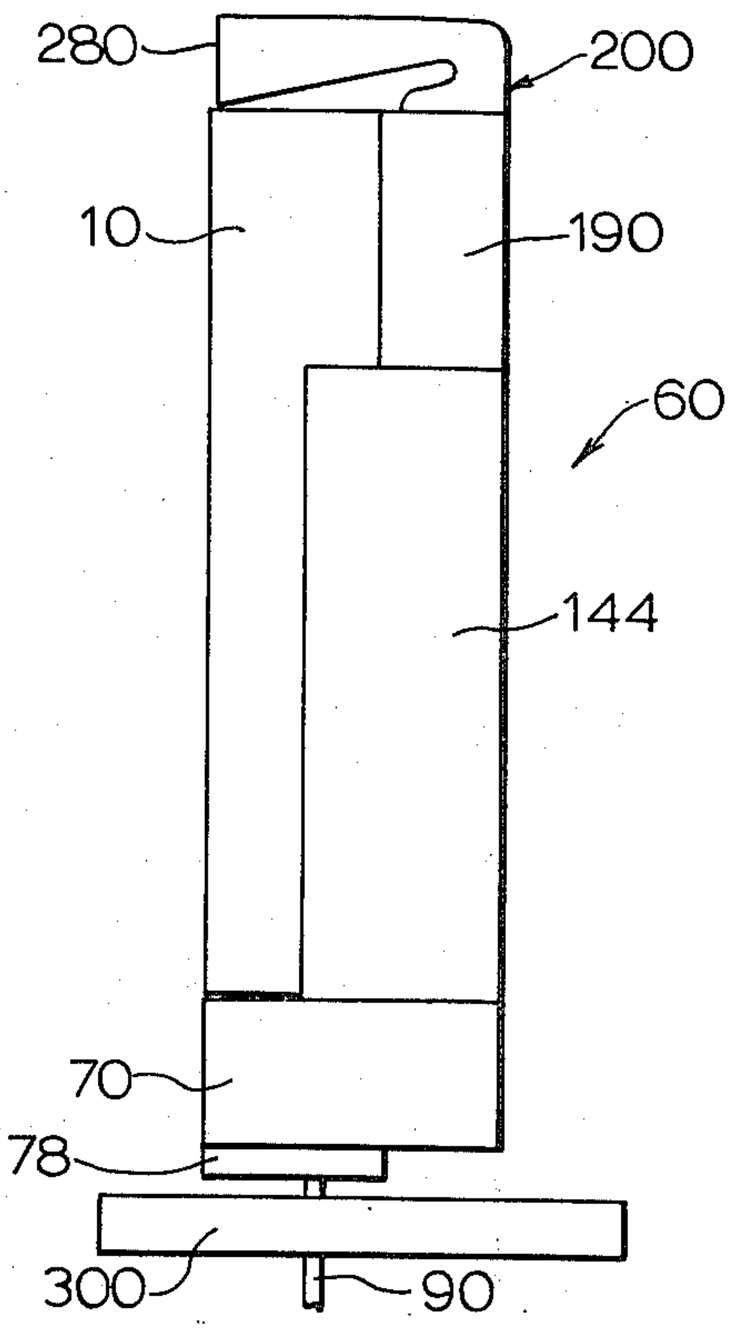

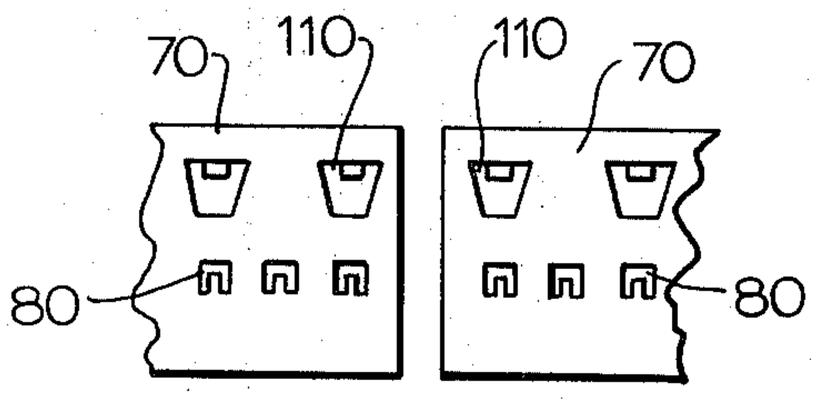

Fig. 14

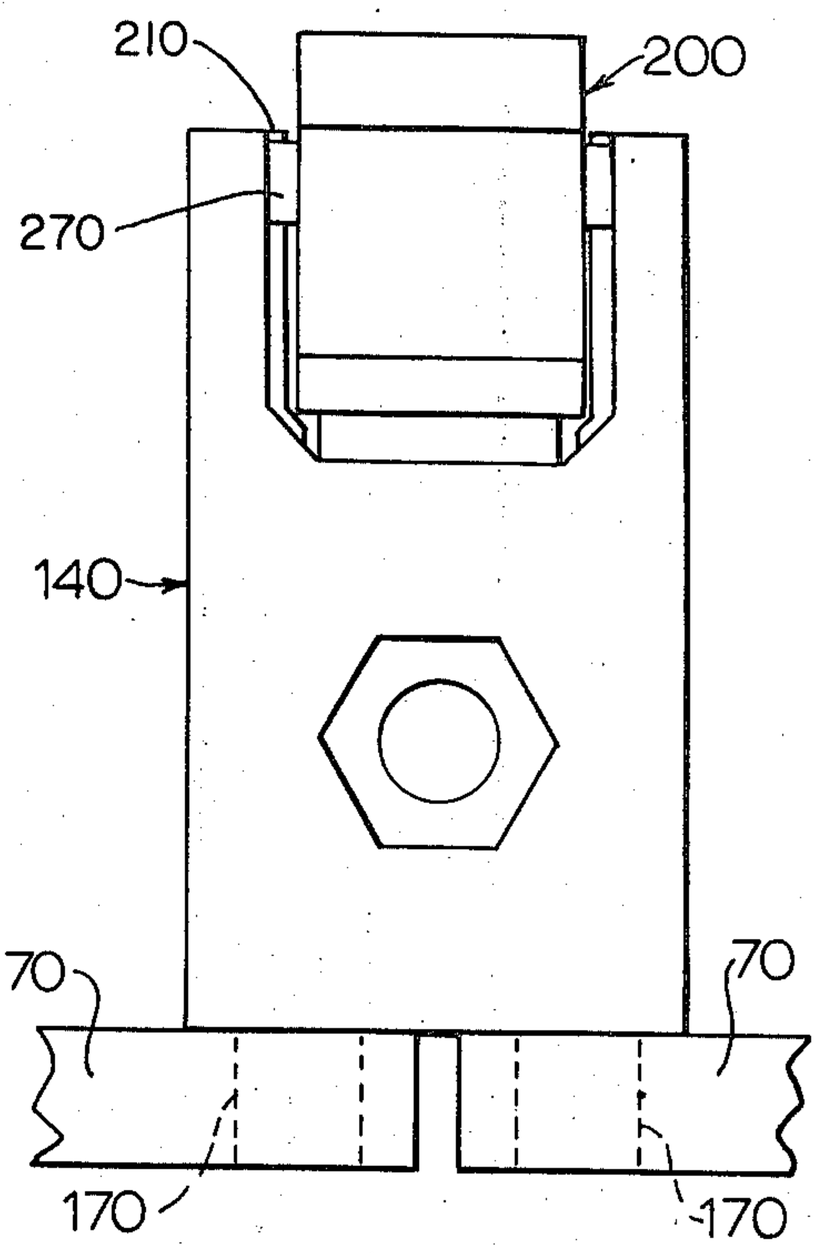

Fig. 15

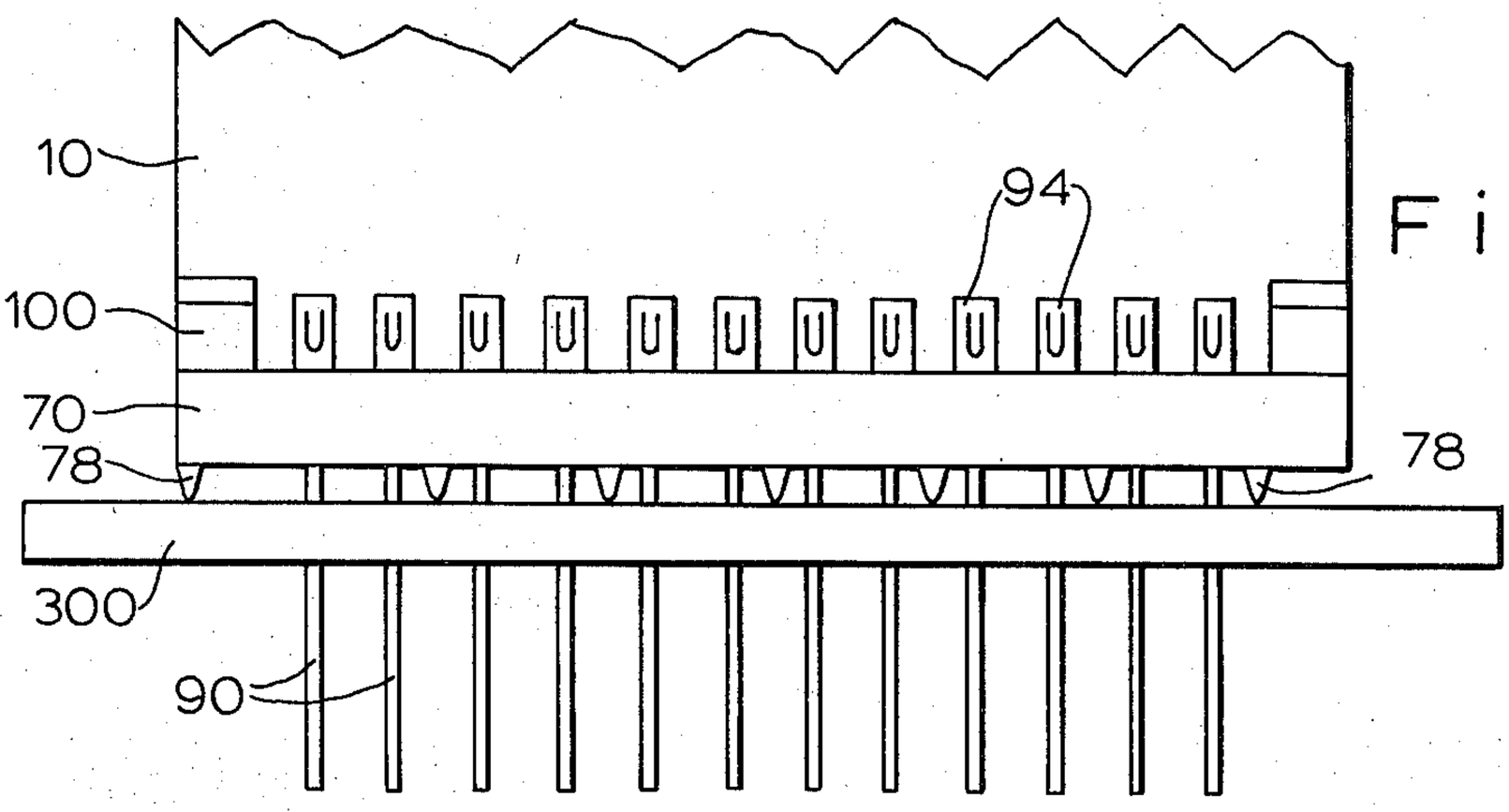

Fig. 16

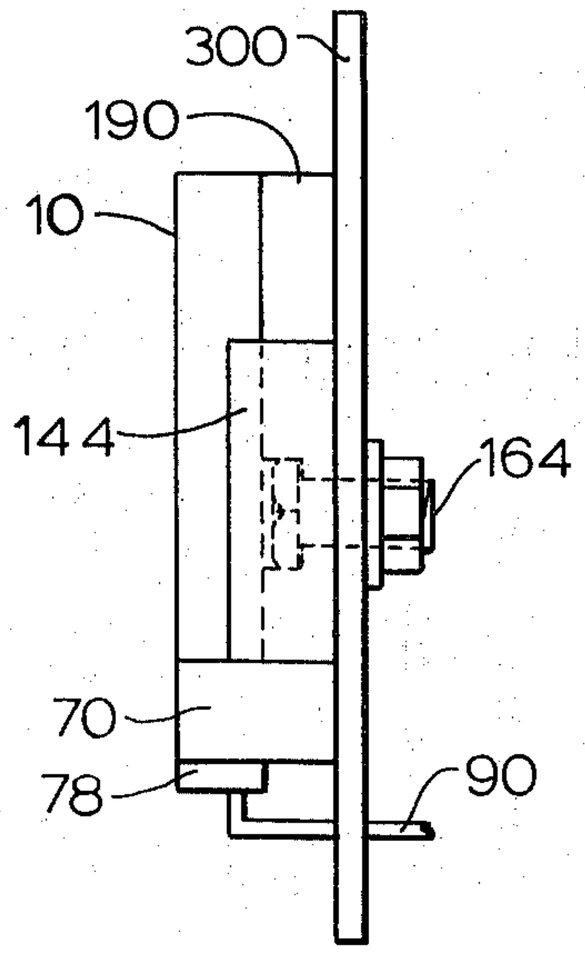

Fig. 17

Fig. 18

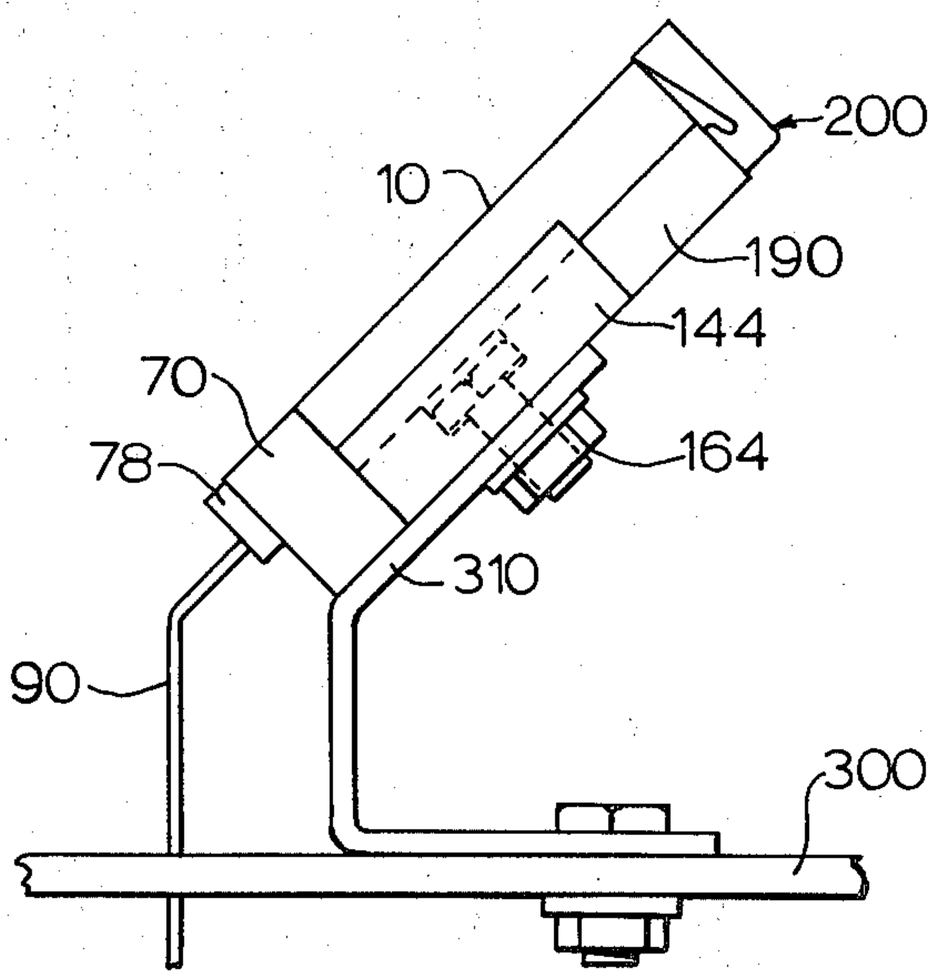

MOUNTING BRACKET FOR DISPLAY PANEL

BACKGROUND OF THE INVENTION

Through the years, electronic instruments providing numerical readout have progressed from using a plurality of individual numerical readout tubes to using display panels, each of which can itself display a plurality of numerals side by side. Display panels are relatively thin and flat, and they present novel problems which concern the means for providing electrical contact to the various electrodes, means for mounting the panel and its contacts on printed circuit boards or the like, and means for providing mechanical support for the panel itself.

SUMMARY OF THE INVENTION

Briefly, a mounting bracket for a display panel, according to the invention, includes a base member which carries a series of electrical contact elements which are adapted to engage the electrodes of a display panel and removably adjustable securing members which are mechanically secured to the base member and which mechanically grip the panel and secure it to the bracket.

DESCRIPTION OF THE DRAWINGS

FIG. **1** is a schematic plan view of a display panel used with the bracket of the invention;

FIG. **2** is an end elevational view of the panel of FIG. **1**;

FIG. **3** is a front elevational view of a bracket embodying the invention;

FIG. **4** is a plan view of a portion of the bracket of FIG. **3**;

FIG. **5** is a front elevational view of a portion of the bracket of FIG. **3** and a portion of a display panel to be mounted thereon;

FIG. **6** is an enlarged plan view of a portion of the apparatus shown in FIG. **4**;

FIG. **7** is an enlarged front elevational view of a portion of the bracket of FIG. **3**;

FIG. **8** is a rear elevational view of the bracket portion shown in FIG. **7**;

FIG. **9** is a front elevational view of a member used with the bracket portion shown in FIG. **8**;

FIG. **10** is a side elevational view of the member of FIG. **9**;

FIG. **11** is a side view of a portion of the bracket of FIG. **3**;

FIG. **12** is a side elevational view of a bracket embodying the invention carrying a display panel and illustrating one step in the method of coupling the bracket with a panel and one method of coupling the bracket to a substrate;

FIG. **13** is a side elevational view of the apparatus of FIG. **12** showing the bracket and display panel completely assembled and illustrating another arrangement for coupling the bracket to a substrate;

FIGS. **14** and **15** illustrate a special arrangement for using the bracket of the invention;

FIG. **16** is a front elevational view illustrating still another arrangement for using the bracket of the invention with a display panel and a substrate; and

FIGS. **17** and **18** are side elevational views illustrating other arrangements for coupling the bracket of the invention with display panels and mounting them on substrates.

DESCRIPTION OF THE PREFERRED EMBODIMENTS

Mounting brackets embodying the invention are particularly adapted for use with display panels of the type illustrated schematically as panel **10** in FIGS. **1** and **2**. No attempt is made to illustrate the features of the panel with exactness, and not all of the elements thereof are shown or described. Panel **10** is a thin, flat, gas-filled device and includes a base plate **20** whick carries a plurality of groups of cathode electrodes **24** and contact elements or pads **30** to which the electrodes **24** are connected by conductive runs (not shown). The panel includes a cover plate **40** spaced from the base plate but sealed to it. The cover plate carries anode electrodes (not shown) on its inner surface, one anode being provided for each group of electrodes **24**. Each anode is electrically connected to a pad **50**, the pads **50** being formed along the edge of the cover plate. Not all of the electrodes or contact elements are shown, to simplify the drawing. The contact elements **30** and **50** are all disposed along the adjacent lower edges of the base plate and cover plate, respectively as shown, and connectors are inserted between the plates to make the desired electrical connection to the cathodes **24** and anodes (not shown). This panel and connectors therefor are described in detail and claimed in copending application Ser. No. 201,655, filed Nov. 24, 1971.

A mounting bracket **60** embodying the invention, referring to FIGS. **3** to **5**, includes an elongated base member **70** which is normally oriented horizontally, is generally rectangular in cross-section, and has a top surface **74** and a bottom surface **76** (FIG. **3**). The base member is provided with a series of elevating pads **78** along its bottom surface for elevating the base member above the surface of a support member, such as a printed circuit board, on which the base member may be mounted. The small space thus provided between the base member and a support surface is sufficient to permit cleaning operations to be performed, such as the removal of flux after a soldering operation. The base member **70** includes a series of apertures **80** (FIG. **4**) oriented generally along its central axis and extending from the top surface **74** of the base member through to the bottom surface **76**. The apertures **80** are adapted to receive and lock in place metallic electrical connectors **90** which include portions **94** which are inserted between panel plates **20** and **40** to make contact with contact pads **30** and **50**.

The apertures **80** and connectors **90** are designed and shaped so that portions of the apertures engage portions of the connectors which are locked in place thereby. Such arrangements are well known in the art and need not be described in detail. The apertures **80** are particularly adapted to receive connectors of the type shown in the above-mentioned copending appliation. The connectors **90** are provided in each of the apertures **80** except in the first and the last which themselves receive relatively rigid members **100**.

The members **100** are preferably small metal plates which are adapted to be locked into apertures **80**. The members **100** are also dimensioned so that their upper edge **102** rise above the upper edges **104** of the connectors **90** so that, when a display panel **10** and a bracket **60** are brought together (FIG. **5**) and the base member **70** approaches the panel so that the connectors **90** can

be inserted between panel plates **20** and **40**, the members **100** enter the space between the panel plates first and then guide the connectors smoothly into place. This prevents the connectors from striking one of the plates **20** and **40**, and perhaps being damaged.

The elongated base member **70** also includes a series of apertures **110** (FIGS. **4** and **6**) aligned parallel to the series of apertures **80** but closer to its rear wall. The apertures **110** are spaced apart uniformly, and they have a generally trapezoidal cross-section. The rear wall **120** of each aperture is provided with an elevation or protrusion **130** which is adapted to provide a locking function with an upright member **140** (to be described) which is secured to member **70** and extends vertically therefrom.

The upright member **140**, used with the elongated base member **70** (FIGS. **3** and **7** to **11**), is generally rectangular and plate-like and has a main body portion **150** provided with a hole **160** which is adapted to receive a screw or bolt **164** or the like (FIGS. **17** and **18**), by means of which the upright member **140** and the bracket **60** to which it is secured can be bolted to a printed circuit board or the like. The member **140** includes a pair of legs **170** which project from the lower portion of the main body and are of generally trapezoidal cross-section. The legs are thus adapted to be inserted into two adjacent apertures **110** in the member **70**, and they include in their rear walls depressions **180** which receive the projections **130** in the apertures **110**. The trapezoidal shapes of the legs and the apertures **110**, and the combination of projections **130** and depressions **180**, provide optimum locking action between an upright member **140** and base member **70**.

In addition, a pair of arms **190** project upwardly from the upper margin of the main body portions **150** for receiving a pivotable L-shaped bracket **200** (FIGS. **9** and **10**). A narrow lip **210** (FIG. **7**) projects laterally from the inner rear edge of each arm **190** to permit bracket **200** to bear against it in a manner to be described. The bracket **200** is generally L-shaped and includes a first vertical portion **220**, adapted to be positioned between the arms **190** of member **140**, which includes a lower portion **230** which is adapted to be seated in a recess **240** in the rear wall of the member **140** (FIG. **8**). The lower portion **230** of member **200** carries lateral pin-like projections **250** which enter suitably shaped lateral recesses **260** in recess **240**. Member **200** is thus pivotable on the pin-like projections **250** with respect to member **140**. The side walls of member **200** carry projecting tabs **270** which bear against lips **210** on legs **190** of member **140**. The L-shaped member **200** also includes a horizontal arm **280** which extends generally perpendicularly from the upper end of vertical portion **220**, and the joint between the arm **280** and vertical member **220** is shaped and designed so that the two are flexibly connected to each other for a purpose to be described.

The L-shaped bracket **200** is coupled to upright member **140** by having the lower portion **230** locked into recess **240**, and then the bracket is pivoted so that it passes between and through arms **190**, and then it can fall back so that tabs **270** on member **220** bear against lips **210** on arm **190**. The bracket **200** can be removed by reversing the foregoing steps.

In operation of the bracket of the invention **60**, the connectors **90** and two or more alignment members **100** are secured in place on base member **70**, and at least two upright members **140** are inserted in apertures **110**, preferably at the opposite ends of the base member **70** (FIG. **3**). Generally, the member **70** is of approximately the same length as the panel **10** which it is to support. The movable L-shaped brackets **200** carried by upright members **140** are pivoted rearwardly away from the panel (FIG **12**), and the panel is mounted in place with the connectors **90** positioned between the top and base plates **20** and **40** and engaging contacts **30** and **50**, and then the pivotal members **200** are snapped into position, with the flexible arms **280** engaging the upper edge of the panel to hold it securely in place (FIG. **13**). Because of the flexibility of arms **280**, they can adapt to, and can be used with, panels of a relatively wide range of heights.

It is noted that at least one upright member **140**, in this case, the one on the right as seen in FIG. **3**, is provided with a vertical lip or guide wall **144** at the outer edge of the main body portion and extending along its length (FIGS. **3**, **12** and **13**). The guide wall **144** is used to guide the panel **10** into place, and, in coupling a panel to a bracket **60**, the edge of the panel is pressed against wall **144** as the connectors **90** and plates **100** are inserted therein, as described above with respect to FIG. **5**.

The various members **70** and **140**, and apertures **110**, are designed so that, in a modification of the invention (FIGS. **14** and **15**), to accommodate a relatively long panel **10** (not shown) when a correspondingly long base member **70** is not available, two short members **70** can be positioned in axial alignment and positioned so that the adjacent end apertures **110** are suitably spaced apart to receive the legs **170** of one of the vertical members **140**. The vertical member **140** thus provides coupling between the two individual first members **70**.

The bracket of the invention can be used in many different ways. For example, in the simplest arrangement illustrated in FIG. **16**, only base member **70**, carrying connectors **90** and alignment plates **100**, is used for supporting panel **10**. Generally, in this combination, the base member **70** is mounted directly on a printed circuit board **300**, with its connectors **90** suitably secured in place, for example, by soldering. In this type of use, the elevating pads **78** on the lower surface of base member **70** permit flux or the like to be cleaned off the board under the base member.

In another arrangement illustrated in FIG. **17**, base member **70** and at least two upright members **140** are employed without L-shaped brackets **200**. With this type of combination, the bracket **60** is secured to a printed circuit board **300** which is larger than the panel and extends above the upper edge of the panel so that, if brackets **200** had been provided, they would not be usable. With this type of arrangement, the connectors **90** are suitably bent and inserted in holes in the printed circuit board **300**.

In still another arrangement shown in FIG. **18**, the bracket **60** carrying its panel **10** is secured to one or more suitably shaped metallic brackets **310** which themselves are secured to a printed circuit board **300**. As shown, the bracket **310** is shaped to position the panel at a desired viewing angle.

It is clear from the foregoing description and the illustrations, that, with the bracket of the invention and with contacts **90** of the proper length, a panel may be mounted at any desired angle and at any distance from

a printed circuit board or other support member of substantially any size and shape.

It is also clear that modifications may be made within the scope of the invention. For example, more than two upright members **140** may be used to support a panel, and more than two guide members **100** may be used to guide a panel when coupled to a bracket.

What is claimed is:

1. A mounting bracket for a thin, flat display panel having spaced-apart top and bottom plates which carry electrical contacts along adjacent aligned edges thereof, said bracket comprising

an elongated insulating base member having a series of apertures formed along its length and having a top surface and a bottom surface,

a flexible electrical connector secured in each of a plurality of said apertures and having first portions which project to substantially the same height above said top surface of said base member for insertion into said panel, and second portions which project beneath the lower surface of said base member for insertion into a printed circuit board or the like, and

a rigid panel guide member inserted in at least two of said apertures, each said guide member extending above said connectors and positioned to engage said panel first, before said connectors engage said panel when a panel is brought into engagement with said base member,

said connectors and said guide members being oriented along a common axis for insertion into the space between said top and bottom plates of said panel.

2. The bracket defined in claim **1** and including a plurality of elevating means on the lower surface of said base member for spacing said base member from a support member when said bracket is secured to said support member.

3. The bracket defined in claim **1** wherein said guide members are positioned at the ends of said series of apertures.

4. The bracket defined in claim **1** and including at least one upright support member secured to said base member and adapted to support said display panel carried by said bracket.

5. The bracket defined in claim **4** and including a pivotable clamping member pivotally coupled to said upright member and adapted to engage an edge of said panel.

6. The bracket defined in claim **4** wherein said upright member includes a hole for receiving a bolt for securing said bracket to a support member.

7. The bracket defined in claim **4** wherein said upright member includes a pair of spaced-apart arms, each of said arms having a support lip and a generally L-shaped member pivotably secured to said upright member and positioned between said arms and bearing against said lips.

8. The bracket defined in claim **7** wherein said upright member includes a recess formed in its rear surface and receiving a portion of said L-shaped member which is pivotably secured thereto.

9. A mounting bracket for a thin, flat display panel having spaced-apart top and bottom plates which carry electrical contacts along adjacent aligned edges thereof, said bracket comprising

an elongated base member having a series of apertures formed along its length,

an electrical connector secured in each of a plurality of said apertures,

a panel guide member inserted in at least two of said apertures, each said guide member extending above said connectors and positioned to engage said panel first and before said connectors engage said panel when a panel is coupled to said base member,

said connectors and said guide members being oriented along a common axis for insertion into the space between said top and bottom plates of said panel,

at least one upright support member secured to said base member and adapted to support said display panel carried by said bracket, and

a pivotable clamping member pivotally coupled to said upright member and adapted to engage an edge of said panel.

10. The bracket defined in claim **9** and including a plurality of elevating means on the lower surface of said base member for spacing said base member from a support member when said bracket is secured to said support member.

11. The bracket defined in claim **9** wherein said guide members are positioned at the ends of said series of apertures.

12. The bracket defined in claim **9** wherein said upright member includes a hole for receiving a bolt for securing said bracket to a support member.

13. The bracket defined in claim **9** wherein said upright member includes a pair of spaced-apart arms, each of said arms having a support lip and a generally L-shaped member pivotably secured to said upright member and positioned between said arms and bearing against said lips.

14. The bracket defined in claim **13** wherein said upright member includes a recess formed in its rear surface and receiving a portion of said L-shaped member which is pivotably secured thereto.

15. A mounting bracket for a thin, flat display panel having spaced-apart top and bottom plates which carry electrical contacts along adjacent aligned edges thereof, said bracket comprising

an elongated base member having a series of first apertures formed along its length,

an electrical connector secured in each of a plurality of said apertures,

a panel guide member inserted in at least two of said apertures, each said guide member extending above said connectors and positioned to engage said panel first and before said connectors engage said panel when a panel is coupled to said base member,

said connectors and said guide members thus being oriented along a common axis for insertion into the space between said top and bottom plates of said panel,

a series of second apertures formed along the length of said base member,

at least one upright member secured to said base member and having legs inserted in selected ones of said second apertures, and

a pivotable clamping member pivotally coupled to said upright member and adapted to engage an edge of said panel.

16. The bracket defined in claim 15 wherein said upright member includes a hole for receiving a bolt for securing said bracket to a support member.

17. The bracket defined in claim 15 wherein said upright member includes a pair of spaced-apart arms, each of said arms having a support lip and a generally L-shaped member pivotably secured to said upright member and positioned between said arms and bearing against said lips.

18. The bracket defined in claim 17 wherein said upright member includes a recess formed in its rear surface and receiving a portion of said L-shaped member which is pivotably secured thereto.

19. A mounting bracket for a thin, flat display panel having spaced-apart top and bottom plates which carry electrical contacts along adjacent aligned edges thereof, said bracket comprising

an elongated insulating base member having a series of first apertures formed along its length and having a top surface and a bottom surface,

a flexible electrical connector secured in each of a plurality of said first apertures and having first portions which project to substantially the same height above said top surface of said base member for insertion into said panel, and second portions which project beneath the lower surface of said base member for insertion into a printed circuit board or the like,

a rigid panel guide member inserted in at least two of said apertures, each said guide member extending above said connectors and positioned to engage said panel first, before said connectors engage said panel when a panel is coupled to said base member,

said connectors and said guide members being oriented along a common axis for insertion into the space between said top and bottom plates of said panel,

a series of second apertures formed along the length of said base member, and

at least one upright member secured to said base member and having legs inserted in selected ones of said second apertures,

said panel having its bottom plate bearing against said upright member whereby mechanical support is provided therefor.

20. The bracket defined in claim 19 and including two of said upright support members spaced apart and clamping said panel in place.

21. The bracket defined in claim 19 and including a pivotable clamping member pivotally coupled to said upright member and adapted to engage an edge of said panel.

22. The bracket defined in claim 21 wherein said upright member includes a hole for receiving a bolt for securing said bracket to a support member.

23. The bracket defined in claim 19 wherein said upright member includes a pair of spaced-apart arms, each of said arms having a support lip and a generally L-shaped member pivotably secured to said upright member and positioned between said arms and bearing against said lips.

24. The bracket defined in claim 23 wherein said upright member includes a recess formed in its rear surface and receiving a portion of said L-shaped member which is pivotably secured thereto.

25. A mounting bracket for a thin, flat display panel having spaced-apart top and bottom plates which carry electrical contacts along adjacent aligned edges thereof, said bracket comprising

a pair of elongated base members, each having a series of first apertures and a series of second apertures formed along its length, said base members being disposed end to end, with the series of first apertures being aligned and the series of second apertures being aligned,

an electrical connector secured in each of a plurality of said first apertures,

a panel guide member inserted in at least one of said first apertures,

said guide members extending above said connectors, and

an upright member having a pair of legs coupled to said pair of elongated base members, with one leg engaging a second aperture in one member and the other leg engaging a second aperture in the other member.

* * * * *