United States Patent [19]

Danesi

[11] **3,772,633**

[45] **Nov. 13, 1973**

[54] **MULTIPLE SERVICE EXTENSION CORD**

[75] Inventor: **Paul P. Danesi,** Attleboro Falls, Mass.

[73] Assignee: **Cable Electric Products, Inc.,** Providence, R.I.

[22] Filed: **Mar. 20, 1972**

[21] Appl. No.: **235,972**

[52] **U.S. Cl.** ..... **339/28,** 29/193, 339/32 R, 339/154 R, 339/164 R, 339/204 R, 339/218 R

[51] **Int. Cl.** **H01r 11/18,** H01r 13/54

[58] **Field of Search** 339/19, 22, 28, 29, 339/31–33, 65, 66, 75, 76, 95, 176, 154, 166, 198.6, 174, 204, 205, 218, 241, 248, 252, 256, 258

[56] **References Cited**

UNITED STATES PATENTS

3,083,344	3/1963	Long	339/31 R
3,388,976	6/1968	Danesi	29/193 R
3,199,068	8/1965	Neenan	339/248 X
3,005,179	10/1961	Holt	339/159 C

FOREIGN PATENTS OR APPLICATIONS

550,848	12/1957	Canada	339/157 C
944,925	11/1948	France	339/154 A
1,574,163	7/1969	France	339/198 N

Primary Examiner—Marvin A. Champion
Assistant Examiner—Terrell P. Lewis
Attorney—Max Schwartz

[57] **ABSTRACT**

The device comprises a conventional multiple service extension cord in which the multiple service tap is reduced to a minimum size of a small rectangular block. Further savings are accomplished by providing a single pair of contact elements for receiving a pair of male contact plug elements from opposite directions. The contact elements are designed so that they can be stamped from a single piece of stock requiring no assembly operations. The transverse passageways for receiving the male contact elements are offset so that one pair of contact elements enter a passageway which leads below the service contacts and the opposite pair of male contacts enter a passageway which is offset to swing above the contacts. This results in a reduction in size. Since the plastic dielectric material from which the service tap is molded is fairly expensive, the reduction in weight results in a considerable saving in costs. Furthermore, the contact elements also are reduced to an irreducible minimum of contact areas. This is also an expensive metal and any reduction here also results in a cost reduction. The rectangular block construction permits safety in that the block can be stepped on without injuring the parts.

4 Claims, 5 Drawing Figures

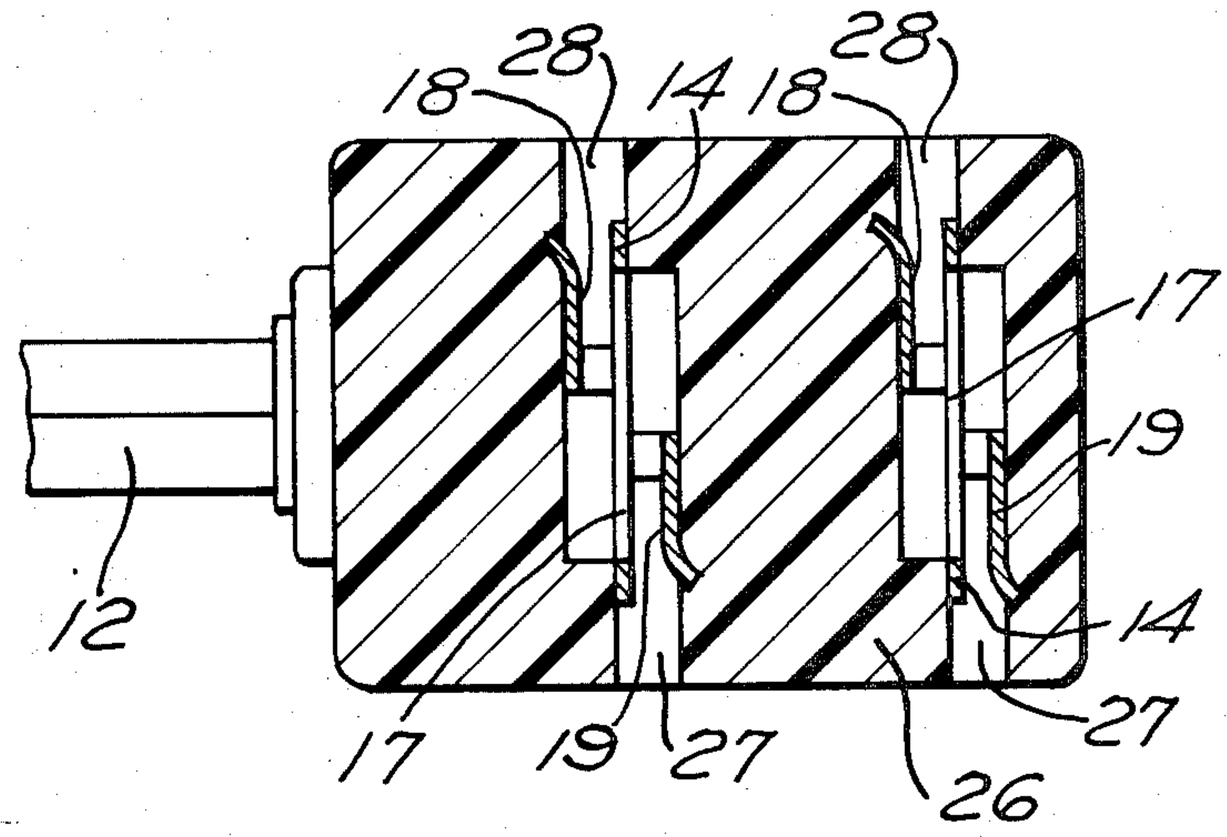

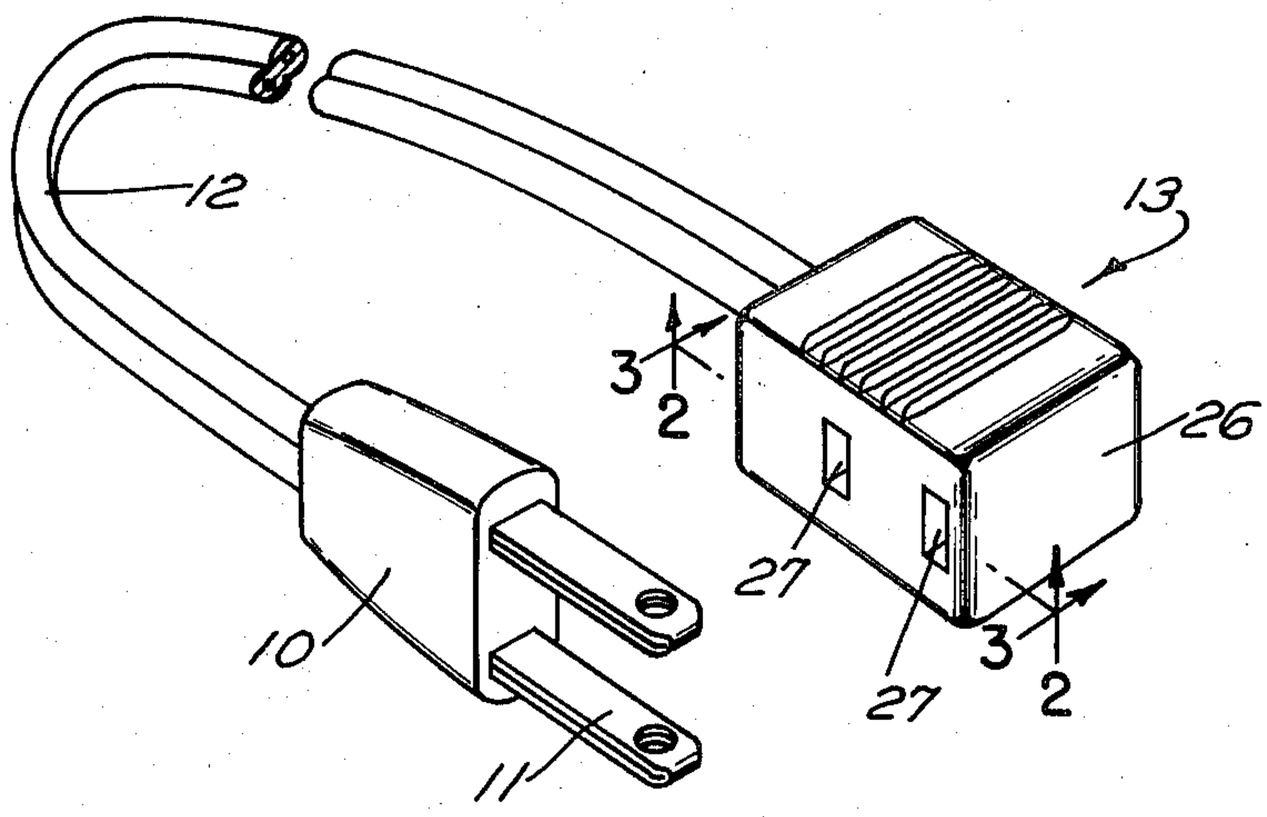

FIG. 1

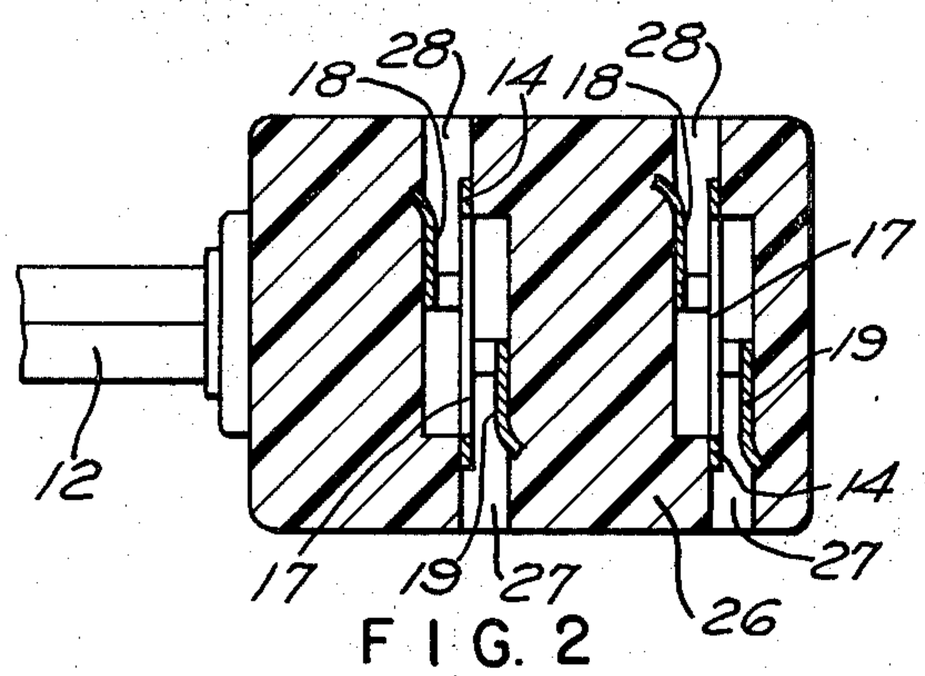

FIG. 2

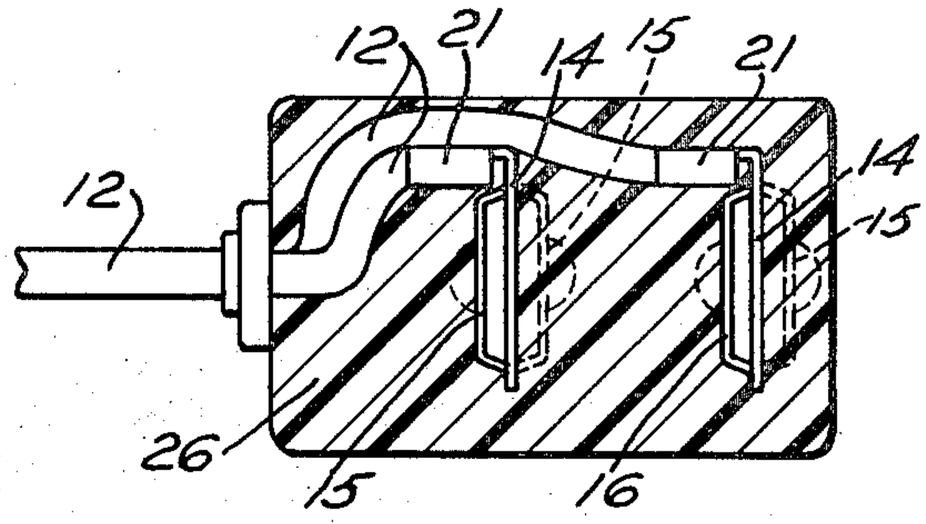

FIG. 3

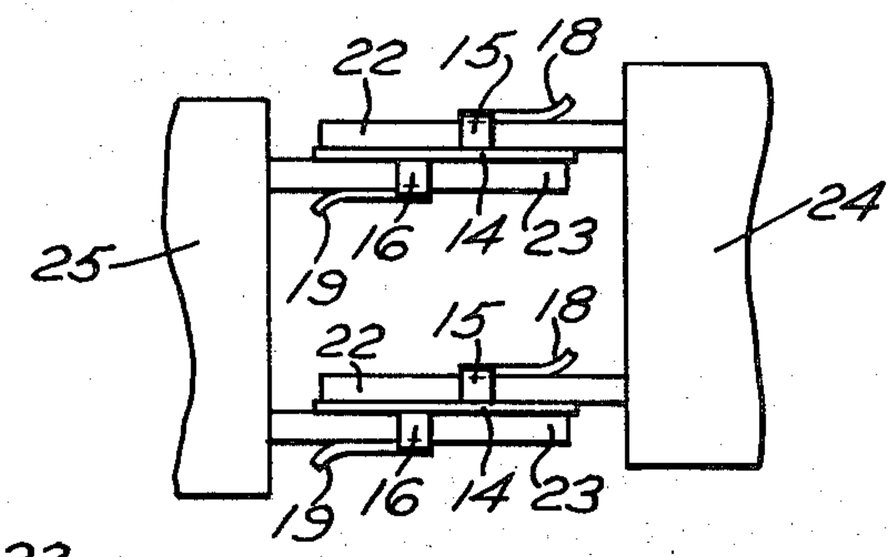

FIG. 4

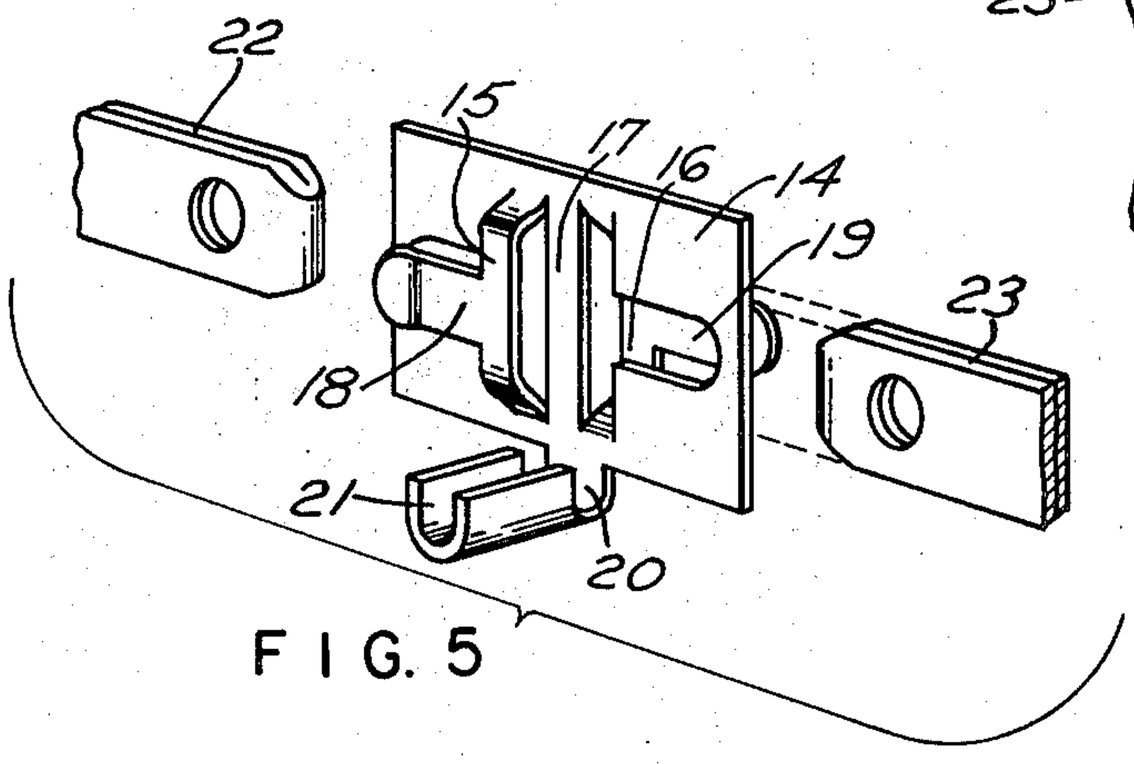

FIG. 5

MULTIPLE SERVICE EXTENSION CORD

My present invention relates to the electrical art and more particularly to a novel construction of an extension cord with a multiple service tap.

The principal object of the present invention is to provide a multiple service tap for an extension cord in which the body of the service tap and the metallic contact elements are reduced to a minimum.

Another object of the present invention is to provide a multiple service tap having a single pair of novel contact elements adapted to receive a plurality of male contact elements from opposite directions.

A further object of the present invention is to provide a multiple service tap in which a single contact element receives a plurality of male contact elements one above and one below in offset relation to save space.

Another object of the present invention is to provide a multiple service tap in which the metallic contact elements can be stamped from sheet stock requiring no further assembly operations.

A further object of the present invention is to provide a multiple service tap for an extension cord which is simple in construction and easy and economical to manufacture and assemble.

With the above and other objects and advantageous features in view, my invention consists of a novel arrangement of parts more fully disclosed in the detailed description following in conjunction with the accompanying drawings, and more particularly defined in the appended claims.

Multiple service extension cords conventionally comprise a male contact plug having a pair of contacts which are insertable in a wall receptacle. An extension cord of suitable length extends from the male contact plug. At the outer end of the extension cord is a multiple service tap. This is a female type element designed to receive one or more male contact plugs usually attached to lamps or other electrical devices. The multiple service tap is designed to receive the male contact elements on different faces of the tap and suitable female contact elements must be provided for receiving the male contact elements and for providing the continuity in the electrical connection. Therefore. most multiple service taps are fairly bulky and comparatively expensive to manufacture. The present invention is designed to provide a multiple service tap which reduces its bulk to a minimum size and reduces the metallic parts to a minimum. Assembly operations are eliminated and the cost is greatly reduced. Furthermore, the multiple service tap of the present invention is designed in the form of a flat rectangular element so that it will not be damaged if stepped on accidentally.

In the drawings,

FIG. 1 is a perspective view of a multiple service tap and extension cord embodying the present invention.

FIG. 2 is an enlarged section taken on line 2—2 on FIG. 1.

FIG. 3 is a similar section taken on line 3—3 on FIG. 1.

FIG. 4 is a plan view showing the contact between a pair of male contact elements and the multiple service contacts with the body of the multiple service tap removed.

FIG. 5 is an exploded view showing the position of the male contacts with relation to the multiple service contact.

Referring more in detail to the drawings illustrating my invention, the usual multiple service extension cord comprises a male contact element 10 having the usual pair of electrical contacts 11 for insertion into a wall receptacle. Extending from the male contact element 10 is the extension cord 12 of a suitable length. Attached to the opposite end of the extension cord is the multiple service tap 13. While any type of dielectric material suitable for the purpose can be used, it is contemplated that the various body parts such as the contact element 10, the insulation cover for the double cord 12 and the body of the multiple service tap 13 all be molded of a plastic material.

Now referring to FIG. 5, I provide a pair of female contact elements to be mounted in the multiple service tap 13. Each contact element comprises a flat rectangular body portion 14 having a strap 15 extruded outwardly from the body of the contact element 14 in transverse position adjacent one side of the center. A second strap 16 is similarly extruded in the opposite direction at the other side of the center strip 17. An integral tongue 18 extends at right angles from the strip 15 out towards the edge of the contact element 14 and a similar tongue 19 extends from the straps 16. The tongue portions 18 and 19 form resilient contact portions in parallel spaced relation to the body portion 14. The body portion 14 is also provided adjacent one edge towards the center with an integral extending lug 20 which may be bent at right angles to the body portion and is provided with an annular body portion 21 adapted to receive the bared ends of a cord lead connection and to be wrapped around it in a conventional manner.

As can be seen in FIG. 5, a male contact element 22 enters from the left and can be pushed in the space between the tongue 18 and the body portion 14 and slid between the ends of the strap portion 15 to make electrical contact with the element. Simultaneously a second male contact element 23 may be moved into contact with the element 14 from the opposite direction. However, the element 23 is offset from the element 22 so that it slides on to the other side of the body portion 14 and between the resilient member 19 and the body portion. Thus the male contact elements 22 and 23 both make contact with the contact portion 14 in identical manner but on opposite sides thereof. Therefore, they can be pushed into position as far as they must go without interfering with each other.

This arrangement is more clearly demonstrated in FIG. 4. In this figure the contact elements 14 are duplicates of the one shown in FIG. 5 and are properly positioned in spaced parallel relation. It will be seen that the male tap 24 will slide its male contact elements 22 above the body portions 14 and beneath the resilient member 18 into the straps 15. Also the male contact element 25 will push its contact members 23 below the body portions 14 and between the resilient members 19 and straps 16. Note that the male contact elements 22 and 23 slide by each other without interference, each making the necessary full physical electrical contact with the element 14.

In assembly, the electrical cord lead wire 12 is provided with a pair of bared ends which are locked in the portions 22 of the contact elements 14 as shown in FIG. 3. The body portion 26 is now molded around the assembly illustrated in FIG. 3 in the usual manner. By providing inserts in a conventional mold, the body por-

tion **26** is now provided with a pair of spaced passageways **27** leading from one face to one side of the contact elements **14** and a pair of spaced parallel passageways **28** leading to the other side of the contact elements **14** so that they will receive the male contact elements in a manner shown in FIG. **4.**

A small pair of contact elements can therefore receive two pairs of small contact plugs thus enabling the reduction in size of the multiple service tap together with a reduction in size of costly material of the contact elements per se. The positioning of the contact elements, the cord lead connection and the passageways from opposite directions, permit a great reduction in the size of the body portion **26.** The overall structure results in a small rectangular body portion which is only slightly more than an inch in length, approximately ¾ inch in width and less than ¾ inch in thickness. The resultant multiple service tap is light in weight yet sturdy, requires a minimum of assembly operations and is extremely economical to manufacture. Other advantages of the present invention will be readily apparent to a person skilled in the art.

I claim:

1. A multiple service extension cord comprising a length of two conductor electrical cord, a male connector at one end of said cord, a multiple service connector at the other end, said multiple service connector

comprising an oblong block of dielectric material, said block having a pair of spaced parallel openings extending inwardly from opposite sides of said block, said pairs of openings being contiguously offset from each other, and means in said block at each pair of contiguous openings for electrically contacting a male contact element inserted in either opening, each of said means being electrically connected to one of said electrical cords, said means comprising a flat rectangular conductive metal member having a T-shaped portion stamped therefrom and extending in spaced parallel relation thereto to receive a male contact element therebetween, said member having a second T-shaped portion on the opposite side from said T-shaped portions.

2. A multiple service connector as in claim **1,** wherein each of said means comprises an integral one-piece member.

3. A multiple service connector as in claim **1,** wherein each of said means is provided with an integral U-shaped portion for electrically connecting to one of said cords.

4. A multiple service connector as in claim **2,** wherein each of said means is provided with an integral U-shaped portion for electrically connecting to one of said cords.

* * * * *