United States Patent [19]

Owen

[11] **3,772,631**

[45] **Nov. 13, 1973**

[54] **RESISTOR AND METHOD OF MAKING AND TRIMMING SAME**

[75] Inventor: **Alex B. Owen,** Wallingford, Pa.

[73] Assignee: **Litton Systems, Inc.,** Beverly Hills, Calif.

[22] Filed: **Aug. 12, 1969**

[21] Appl. No.: **849,332**

[52] **U.S. Cl.** **338/195,** 338/308

[51] **Int. Cl.** **H01c 9/02**

[58] **Field of Search** 338/75, 89, 90, 91, 338/121, 138, 139, 140, 142, 185, 195, 307, 308, 309, 333, 334, 118; 29/610, 620

[56] **References Cited**

UNITED STATES PATENTS

1,918,050	7/1933	Mattern	338/185 X
2,500,605	3/1950	Lange et al.	338/195 X
2,632,831	3/1953	Pritikin et al.	29/620
3,379,567	4/1968	Wright	338/195 X

Primary Examiner—Robert K. Schaffer
Assistant Examiner—Gerald P. Tolin
Attorney—Alan C. Rose, Ronald W. Reagin and Joseph H. Golant

[57] **ABSTRACT**

An improved resistor such as found in potentiometers and rheostats is disclosed as well as the method of manufacturing such resistors and the method of trimming such resistors. A preferred embodiment of the resistor is structured with a resistive film deposited upon a substrate. A number of closely spaced electrically conductive segments are deposited upon the resistive film for reducing electrical distortion caused by trimming and manufacturing anomalies.

10 Claims, 17 Drawing Figures

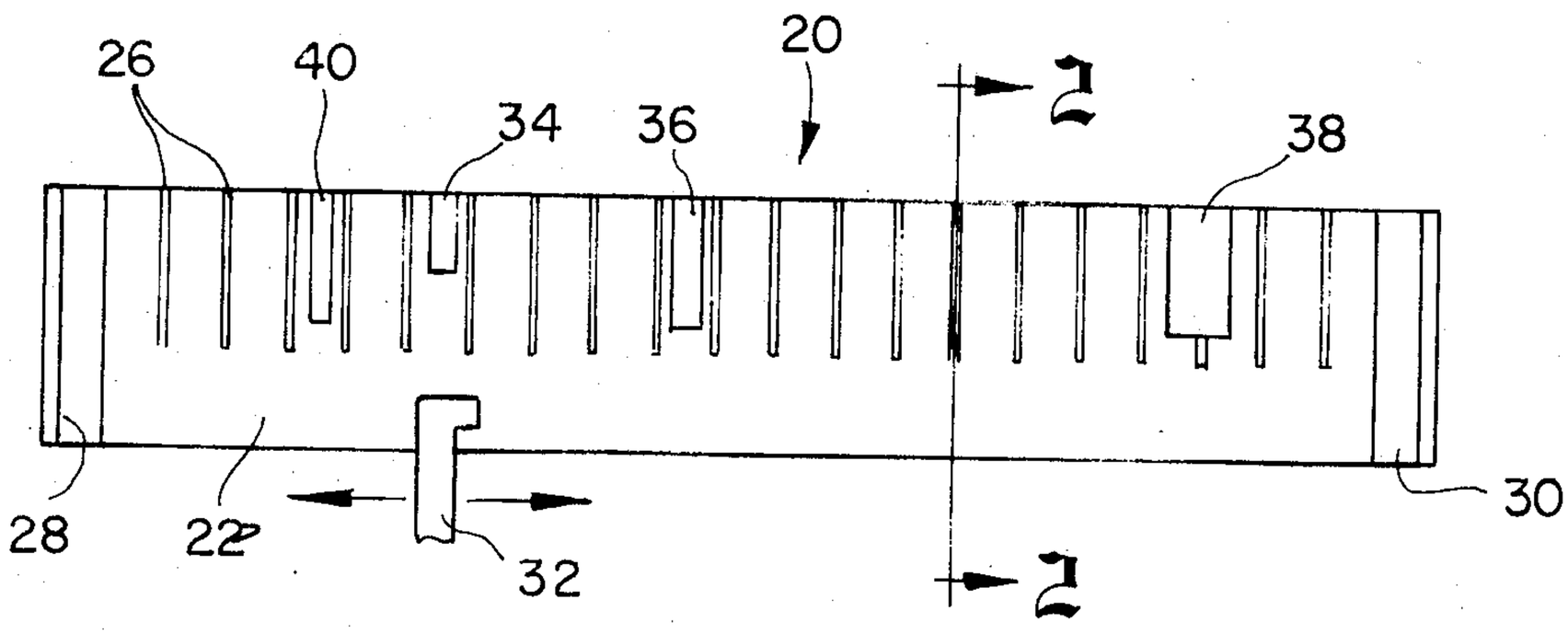

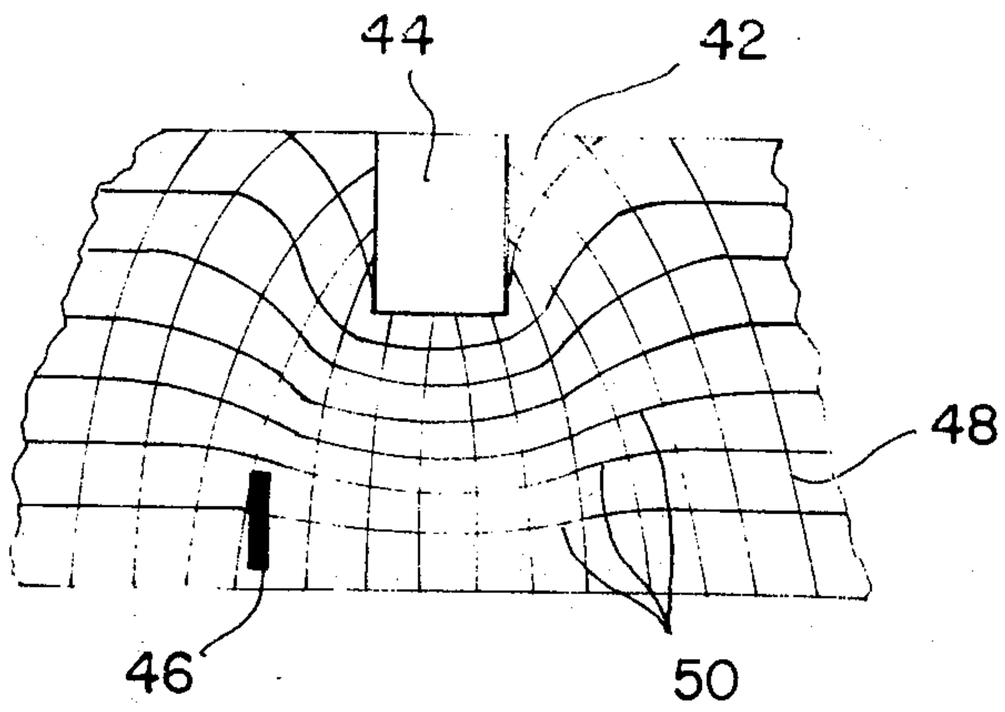

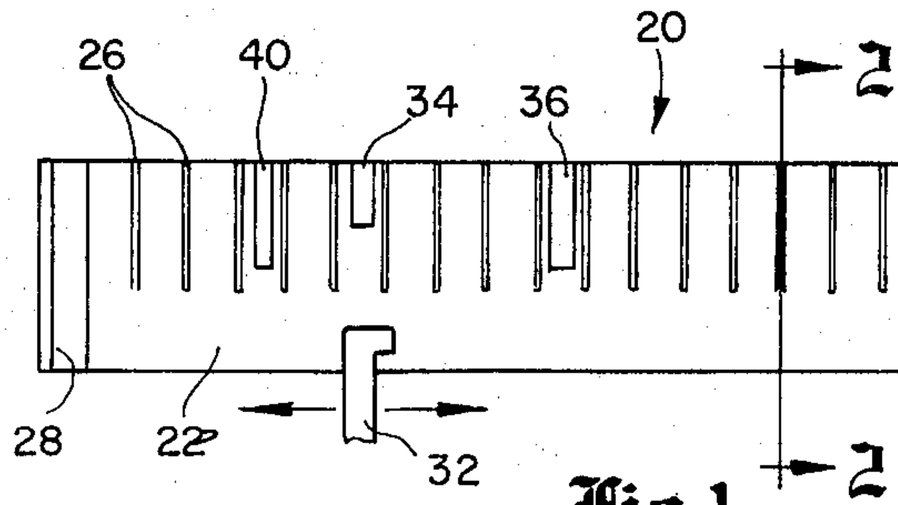

Fig.1

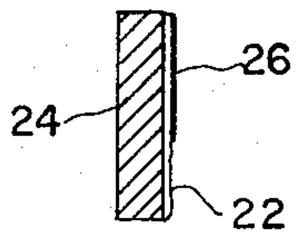

Fig.2

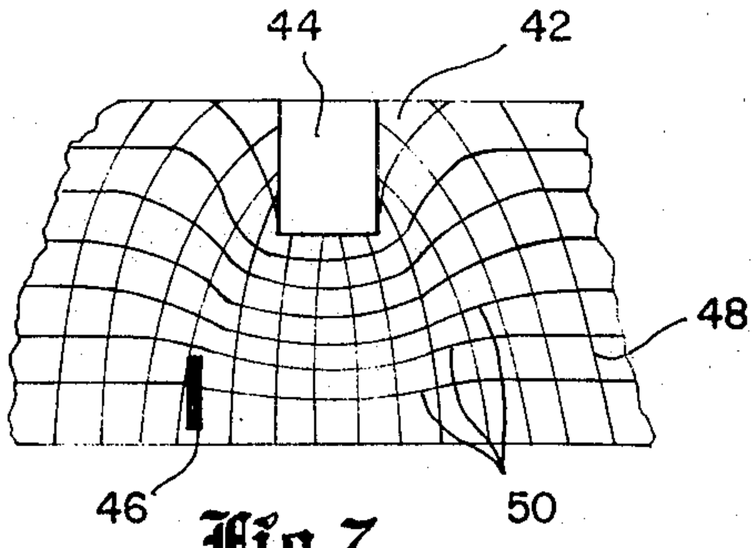

Fig.7

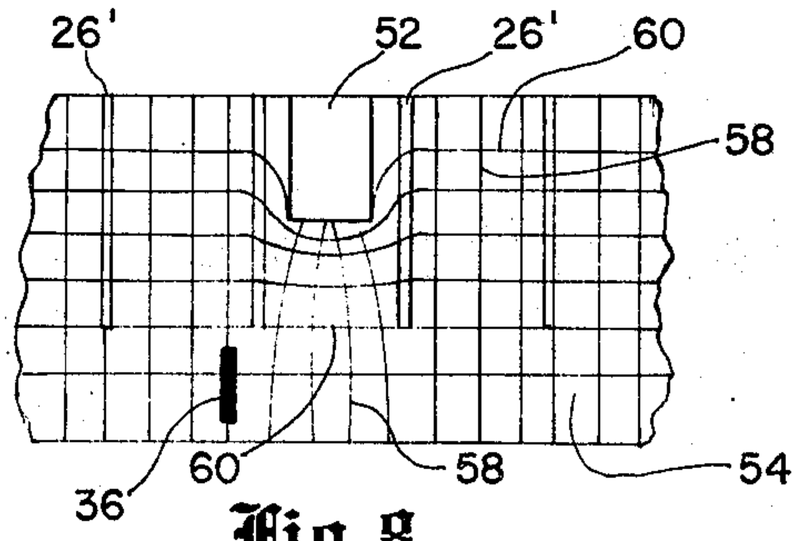

Fig.8

Fig.15

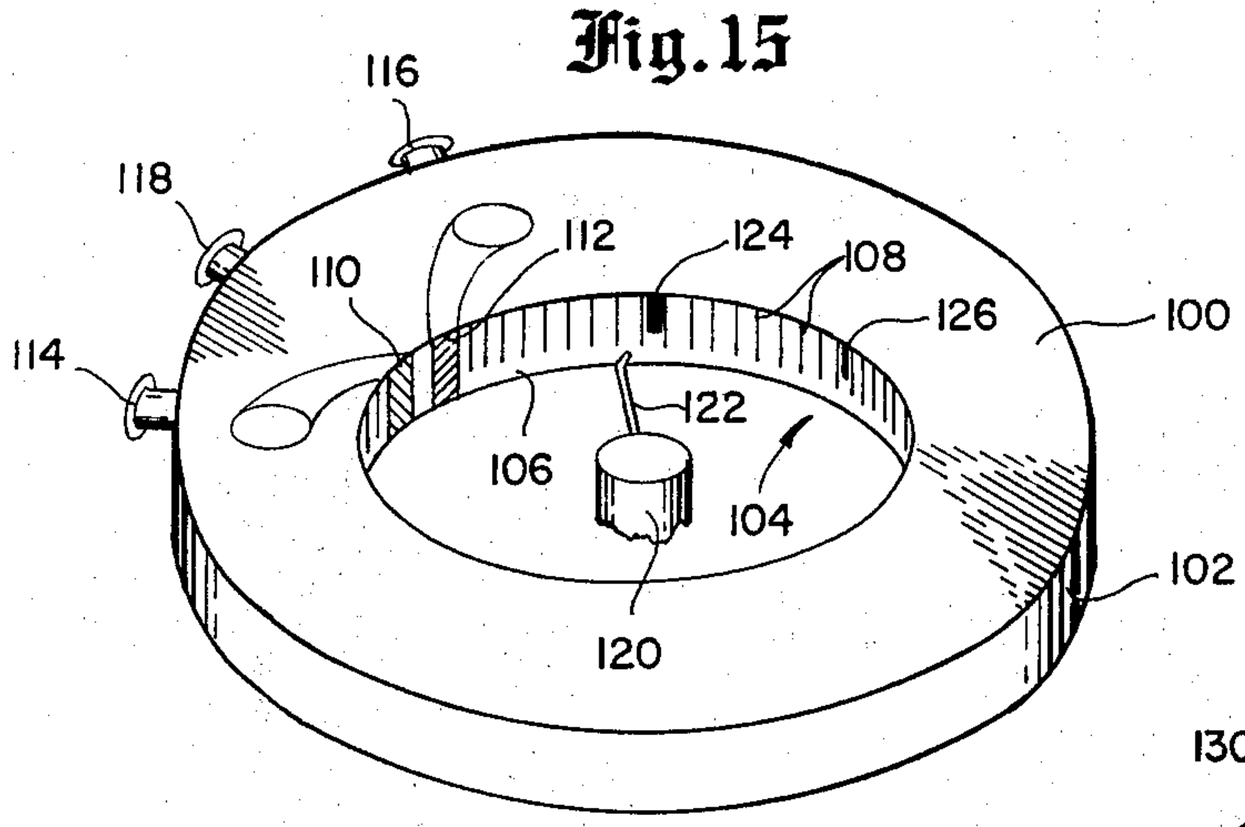

Fig.16

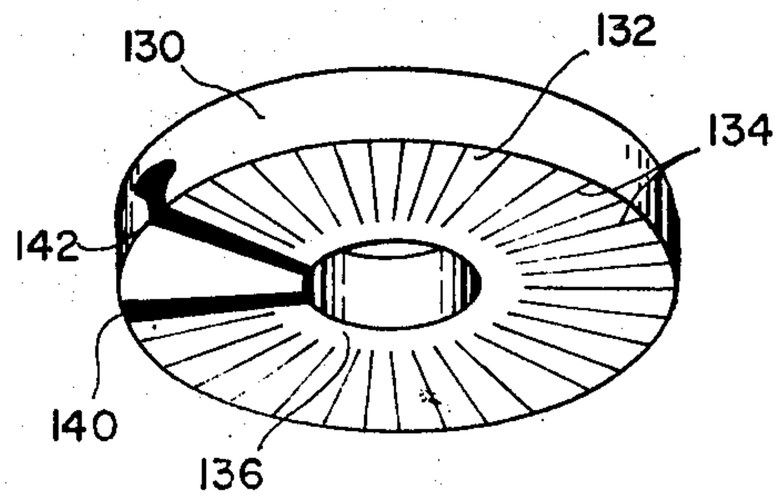

Fig.17

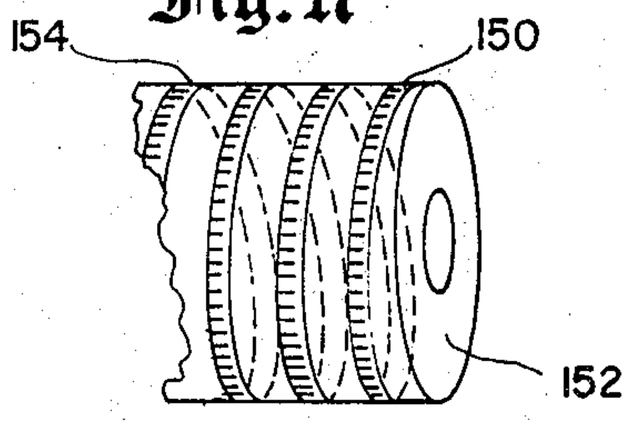

INVENTOR.
ALEX B. OWEN

BY

JOSEPH H. GOLANT
ATTORNEY

PATENTED NOV 13 1973

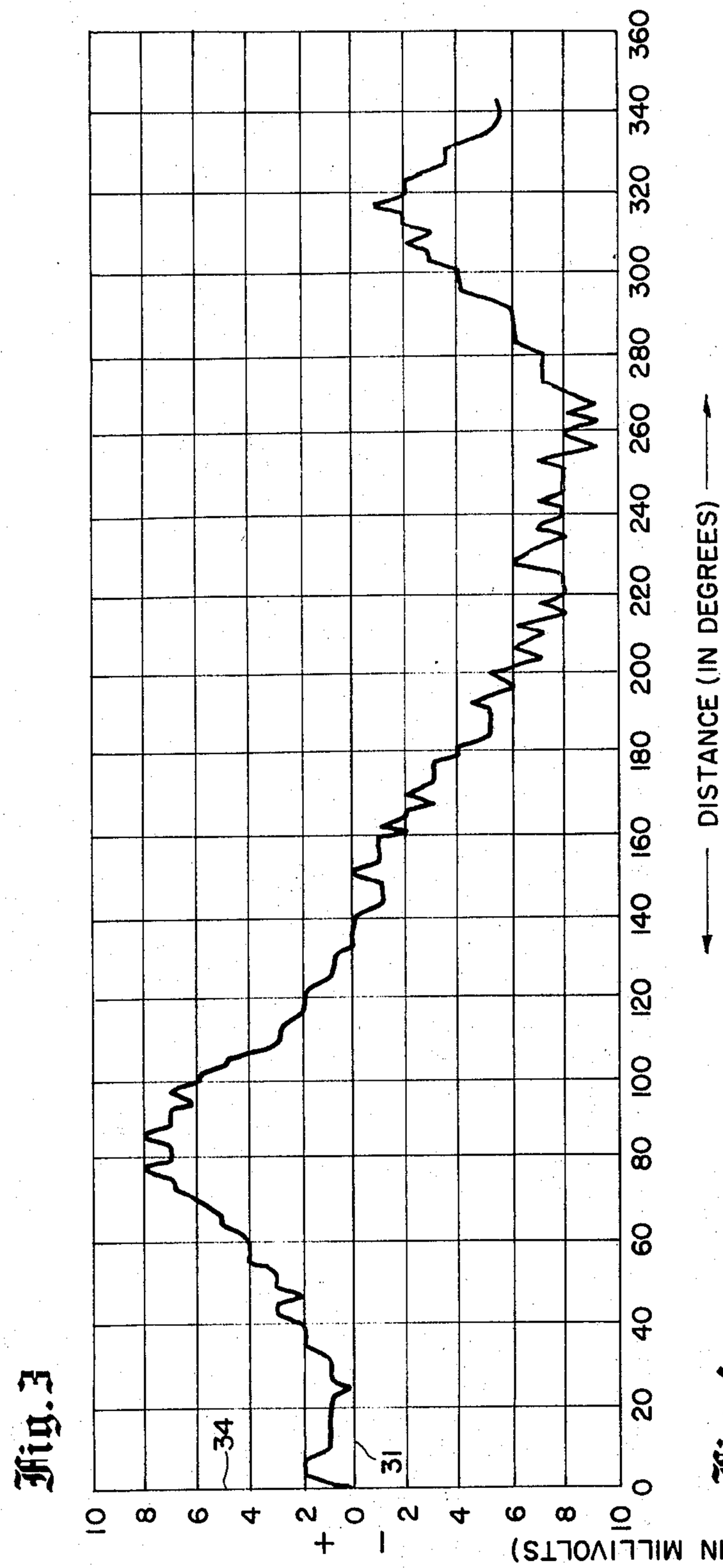

Fig. 3

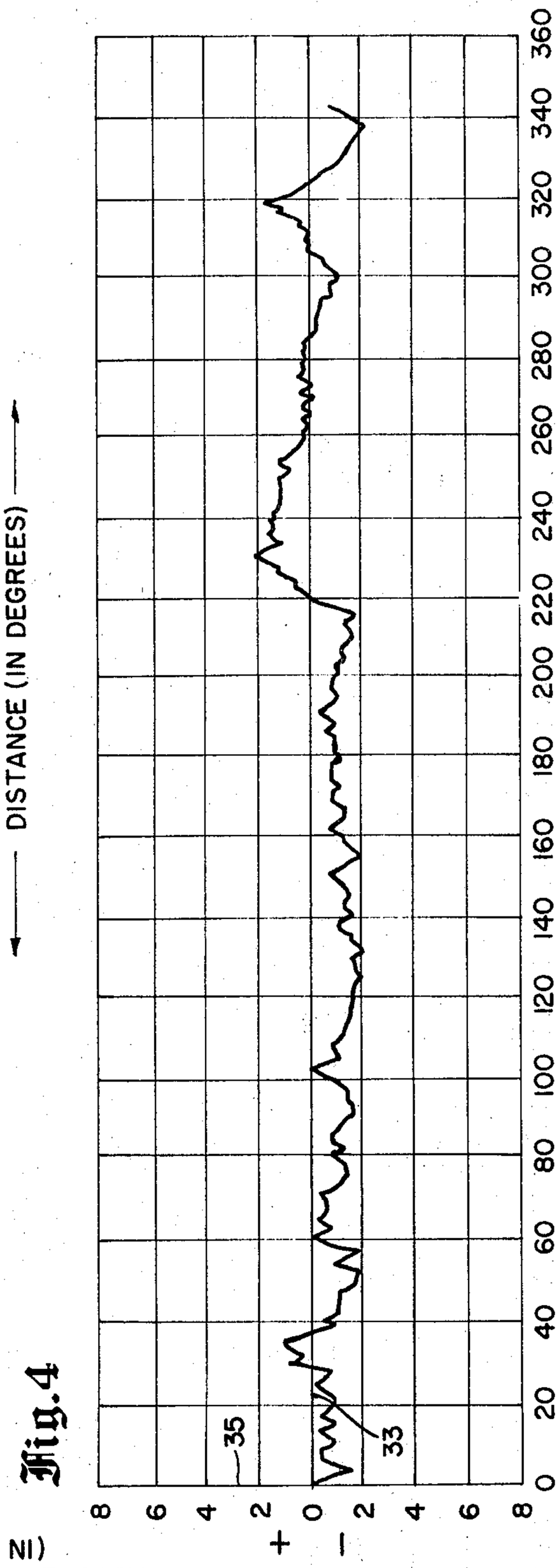

Fig. 4

INVENTOR.

ALEX B. OWEN

BY

JOSEPH H. GOLANT

ATTORNEY

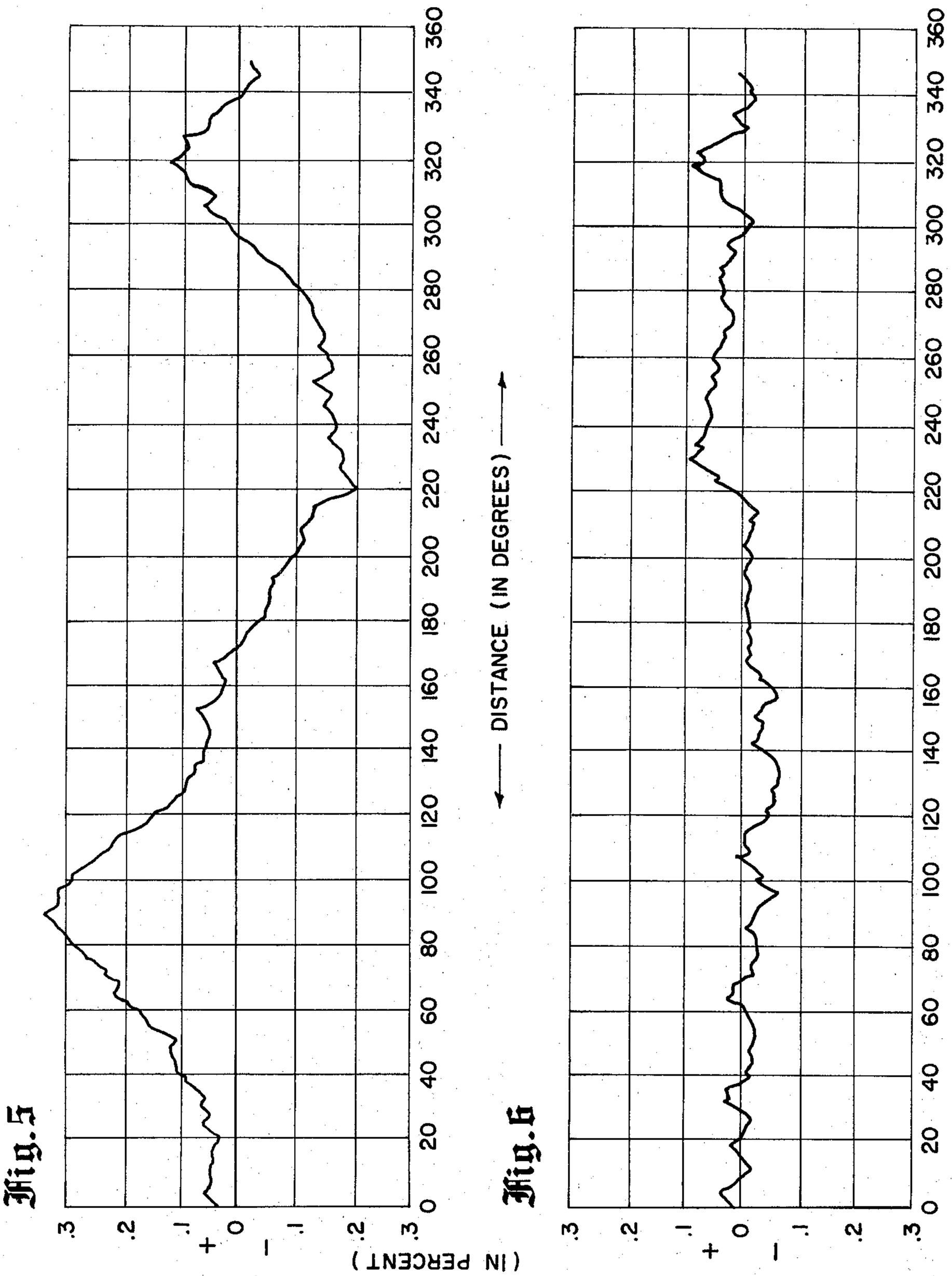

Fig. 5

Fig. 6

INVENTOR.
ALEX B. OWEN

BY

JOSEPH H. GOLANT
ATTORNEY

Fig. 9

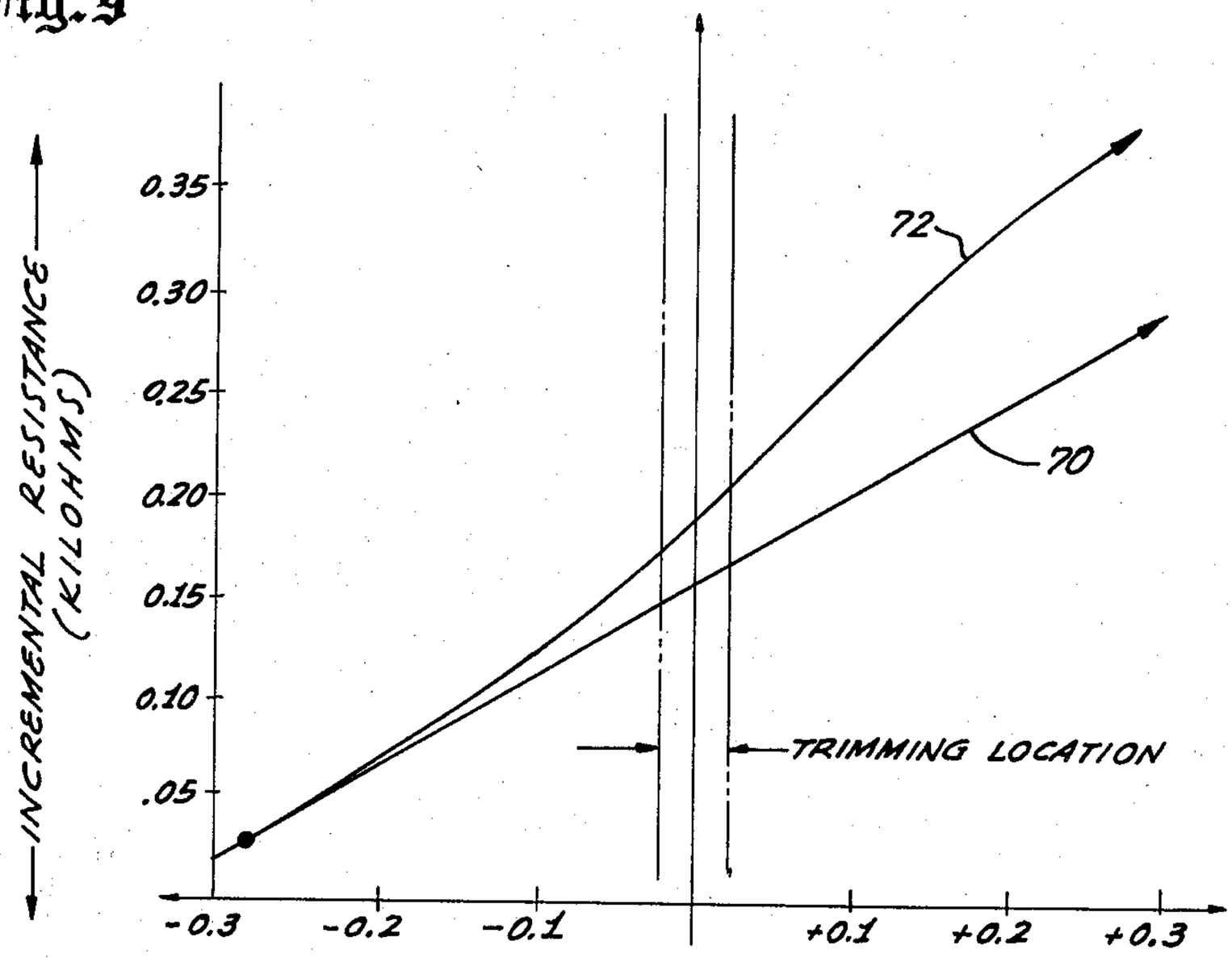

Fig. 10

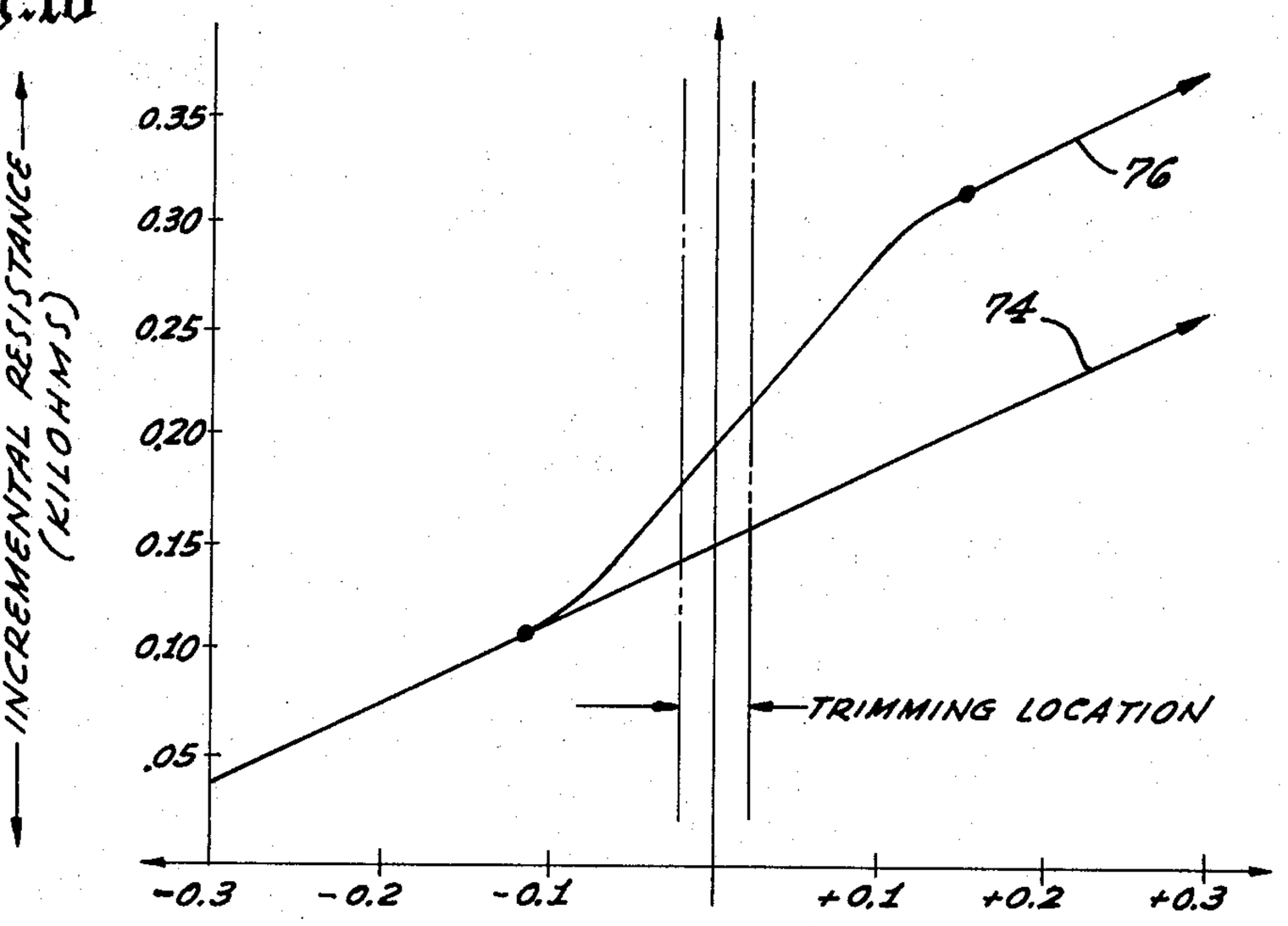

INVENTOR.
ALEX B. OWEN

BY

JOSEPH H. GOLANT
ATTORNEY

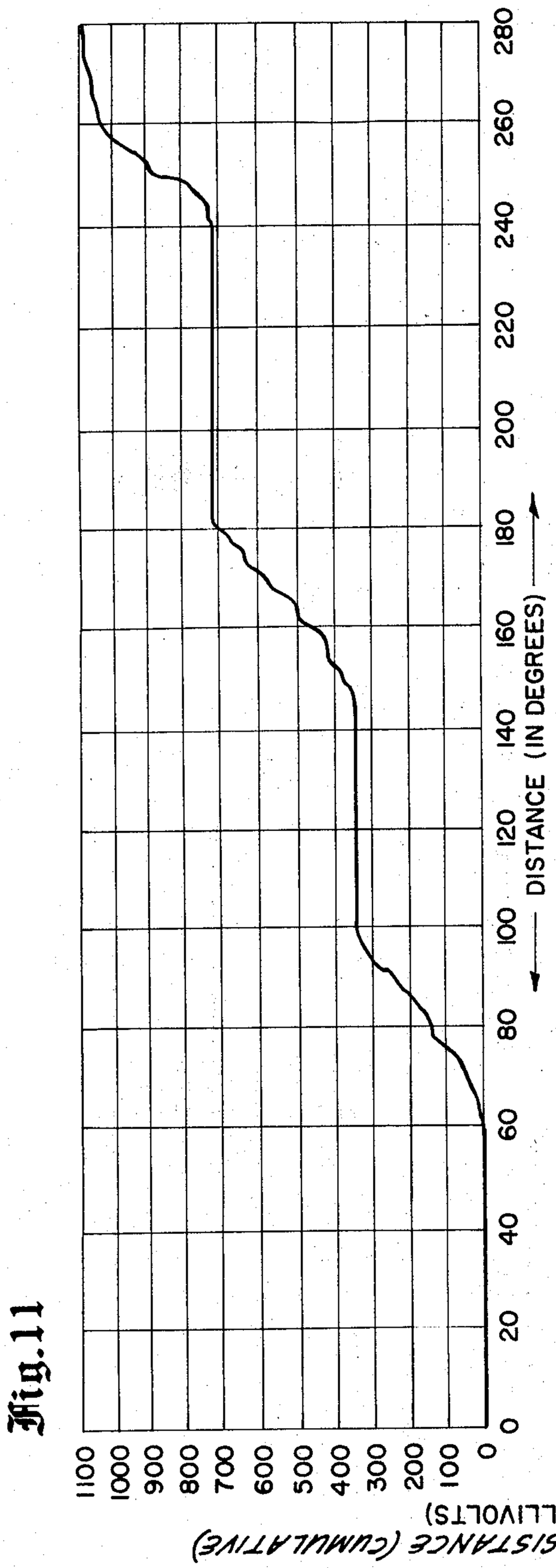

Fig. 11

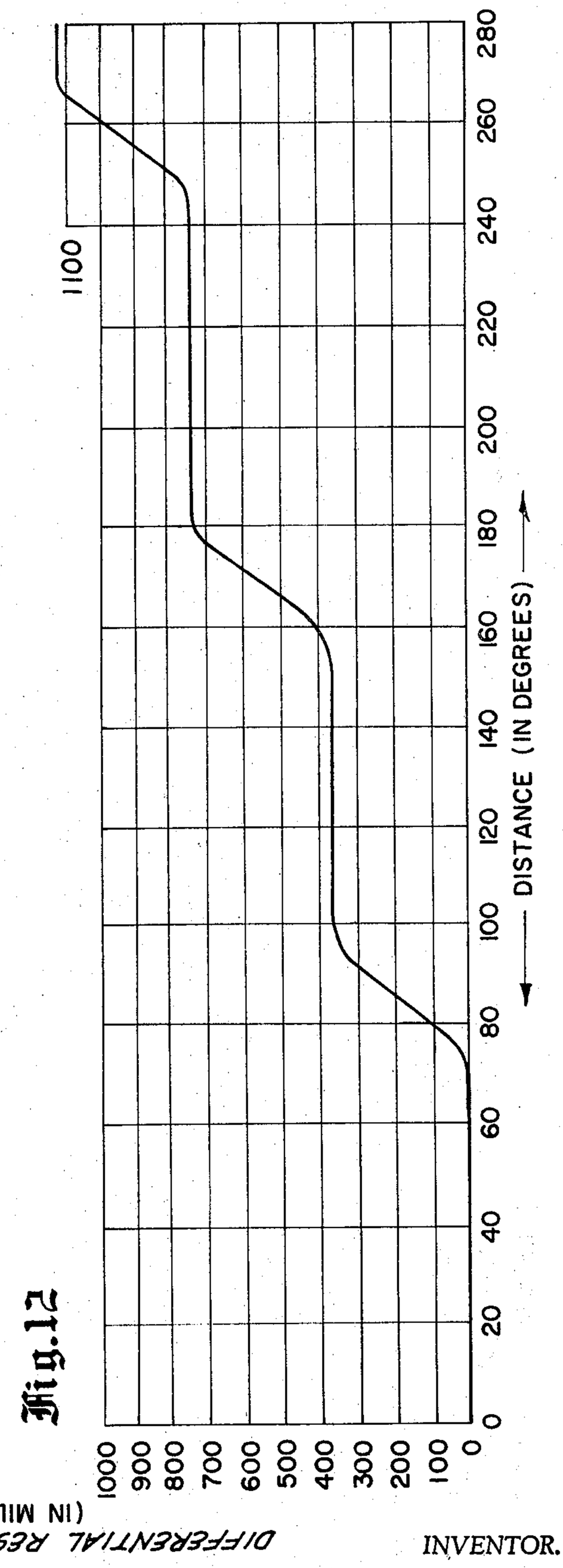

Fig. 12

INVENTOR.
ALEX B. OWEN

BY

JOSEPH H. GOLANT
ATTORNEY

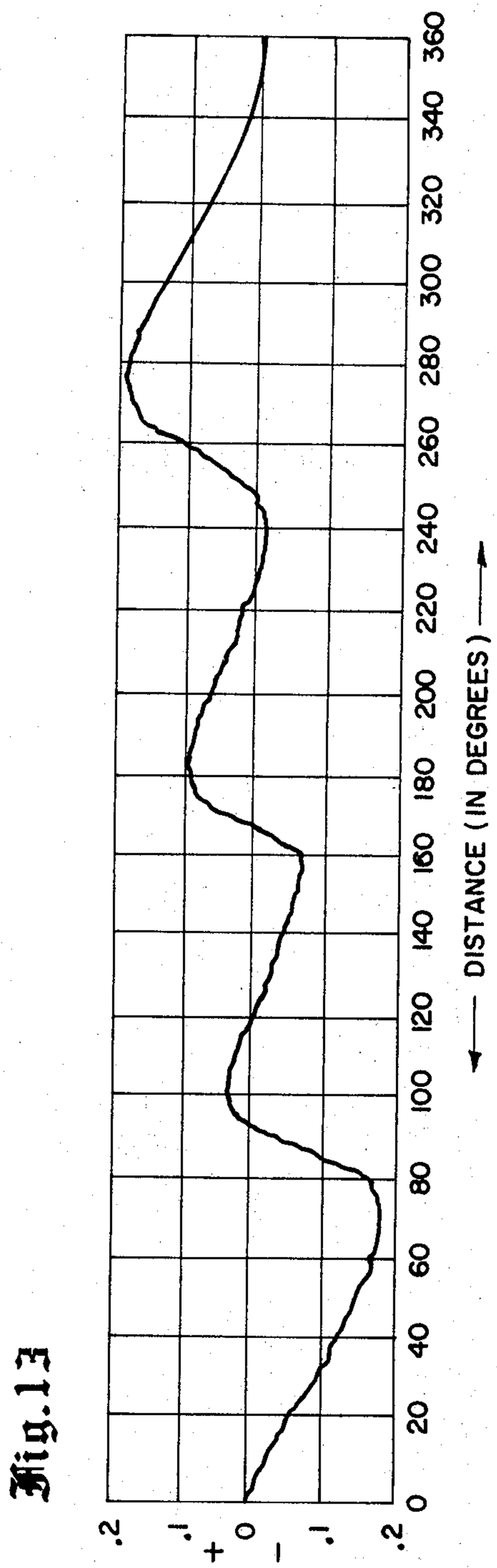

Fig. 13

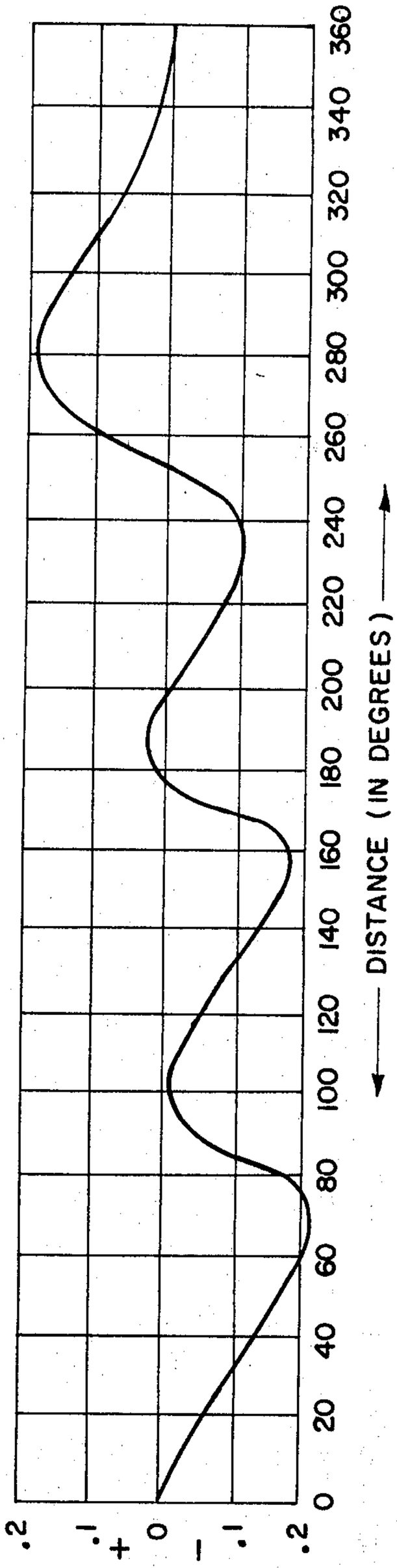

Fig. 14

INVENTOR.
ALEX B. OWEN

BY

JOSEPH H. GOLANT
ATTORNEY

RESISTOR AND METHOD OF MAKING AND TRIMMING SAME

BACKGROUND OF THE INVENTION

1. Field of the Invention

The invention relates to improved trimmable resistors and in particular to trimmable resistors such as those used in potentiometers or other variable resistor devices having a structure whereby the effects of trimming on the resistance value of the device are relatively localized and thereby more predictable.

2. Description of the Prior Art

Trimmable resistors are well known and have been used as elements in such devices as rheostats and potentiometers. The word "trimmable" refers to the resistor's capability of having its resistance and voltage characteristics altered by the removal of a portion or portions of the resistance material of the resistor so as to effect a reduced cross-sectional area in order to increase resistance value and/or altered by the addition of low resistance material to a portion or portions of a resistor in order to decrease resistance value.

Generally, all resistors are manufactured to have desired resistance and/or voltage characteristics in order to fulfill a particular application. The resistance characteristic of an element may be illustrated as a graphical curve developed as resistance value of the element is plotted against distance or displacement along the element. The resistance characteristic may also be thought of as the relationship of output compared to contact element or "wiper" travel. The voltage ratio characteristic may be defined as the ratio of the voltage between the wiper and a designated reference point, usually one of the end terminals, to the input voltage, usually that voltage between the two end terminals plotted against distance or travel of the wiper. Because the manufacturing of a resistor is not an exact art, especially the manufacturing of a resistor of the film type, (a type having an insulative base with a coating of resistive material) it is necessary to have some method of adjusting the actual characteristics of the resistor to the desired characteristics. Trimming is a method commonly used to alter the characteristics. However, trimming itself is not very accurate because of the many parameters affecting the characteristics of a resistor. For example, if a portion of the resistive film of a film-type resistor was removed there would be a change of resistance value per unit length at that section of the resistor from which the portion is taken. However, the change would occur over a relatively wide section along the resistor, as compared with the length and width of the trimming. Thus, removing a portion having a width of 0.06 inches may affect resistance value along a length on the resistor of more than 0.5 inches. This phenomenon will hereinafter be referred to as the degree of "localization" of trimming upon the characteristics of a resistor.

Additionally, the greater the length affected by trimming, the greater the difficulty in predictability of the actual change in resistance values at any particular location along the length. Thus, at a specific distance away from the trim it will not be known to what degree a change has occurred.

Another problem is apparent when plotting the characteristics of a film type resistor on paper. If resistance value is plotted against distance the curve developed is jagged; this is indicative of local irregularities or anomalies in the resistive film. The same jagged curve appears when plotting the voltage characteristic. The jaggedness, of course, frustrates close tolerance trimming.

SUMMARY OF THE INVENTION

The present invention moves a long way toward alleviating the above mentioned problems by providing a variable resistor with the ability to have its characteristic easily changed comprising in combination an electrically conductive material having a high resistance; an electrically conductive element for making electrical contact with the high resistance material, the conductive element and the high resistance material being movable relative one another; means for connecting the high resistance material and the conductive element to external electrical circuitry; and a plurality of closely spaced electrically conductive segments of low resistance positioned along the high resistance material so as to be generally perpendicular to the orientation of a potential gradient capable of being established along the high resistance material, the conductive segments being effectively conductively isolated from each other, from other elements of the variable resistor and from elements external to the variable resistor.

Additionally, the present invention includes a method of manufacturing such a variable resistor and the method of trimming the resistor.

An object of the present invention is to provide a variable resistor having a capability of localizing the effect of trimming and having the capability of reducing error due to manufacturing and/or material anomalies.

Another object of the invention is to provide a variable resistor whose trimming may be achieved quickly and economically, resulting in an improved apparatus capable of providing more accurate output signals.

BRIEF DESCRIPTION OF THE DRAWINGS

FIG. 1 is a view of an embodiment of a variable resistor illustrating the placement of electrically conductive segments.

FIG. 2 is a sectioned view taken along the line 2—2 of FIG. 1.

FIG. 3 is a graph where the difference between the resistance characteristic of a resistive element as manufactured and the resistance characteristic of a desired or ideal resistive element is plotted.

FIG. 4 is a graph where the difference between the resistance characteristic of a resistive element as manufactured and after trimming and the resistance characteristic of a desired or ideal resistive element is plotted.

FIG. 5 is a graph where the difference between the voltage ratio characteristic of a resistive element as manufactured and the voltage ratio characteristic of a desired or ideal resistive element is plotted.

FIG. 6 is a graph where the difference between the voltage ratio characteristic of a resistive element as manufactured and after trimming and the voltage ratio characteristic of a desired or ideal resistive element is plotted.

FIG. 7 is a diagramatic representation of the effects of trimming on a prior art resistor.

FIG. 8 is a diagramatic representation of the effects of trimming on an embodiment of the present invention.

FIG. 9 is a graph comparing resistance characteristic in the vicinity of a trimming location before and after trimming on a prior art resistor.

FIG. 10 is a graph comparing resistance characteristic in the vicinity of a trimming location before and after trimming on a resistor of the present invention.

FIG. 11 is a graph of the resistance differential of a resistive element as manufactured and after trimming in accordance with the prior art (without having a plurality of closely spaced electrically conductive segments).

FIG. 12 is a graph of the resistance differential of a resistive element as manufactured and after trimming in accordance with the present invention.

FIG. 13 is a graph where the difference between the voltage ratio characteristic of a resistive element without conductive segments and a desired or ideal voltage ratio characteristic is plotted.

FIG. 14 is a graph where the difference between the voltage ratio characteristic of the resistive element with conductive segments and a desired or ideal voltage ratio characteristic is plotted.

FIG. 15 is a perspective view of a potentiometer illustrating a preferred embodiment of the present invention.

FIG. 16 is a perspective view of a portion of a potentiometer illustrating another preferred embodiment of the present invention.

FIG. 17 is a perspective view of a portion of a potentiometer illustrating still another preferred embodiment of the present invention.

DESCRIPTION OF THE PREFERRED EMBODIMENTS

Referring to the Drawings wherein like numerals designate like or corresponding parts throughout the several views, there is illustrated in FIG. 1 an embodiment of an adjustable resistor **20** such as those used for potentiometers.

The resistor **20** comprises a body of electrically conductive material having a high resistance (or low conductivity), such as a resistive film **22** coated on an insulative base or substrate **24** as best seen in FIG. **2.** Positioned along the resistor is a plurality of closely spaced electrically conductive segments **26** of low resistance. Two electrically conductive terminals or pads **28** and **30** are provided near each end of the resistor **20** (and extending across the resistor) and are used to connect the resistor to other circuitry and, more importantly, are used to provide an electrical potential across the resistor which establishes a potential gradient parallel to the longitudinal axis of the resistor **20.** The spaced segments **26** extend only partially across the width of the resistor dividing the resistor into two zones, one having conductive segments, the other free of the segments. The segments are essentially perpendicular to the orientation of the potential gradient; stated another way, the segments **26** are positioned essentially perpendicular to imaginary current flow lines or essentially parallel to imaginary equipotential lines formed by the potential difference between pads **28** and **30.** A fuller explanation will be given below when referring to FIGS. **7** and **8.**

It is to be noted that the segments are conductively isolated from each other and from any other element of the resistor or potentiometer. By the term "conductively isolated" it is meant that the segments are not connected in any normal fashion to conduct current to any other elements; that is, there is no electrically conductive element connecting a segment with any other element or component of the resistor or potentiometer or a system of which the resistor or potentiometer may be a part.

To complete the basic elements of a potentiometer, an electrically conductive element or terminal **32,** more commonly called the "wiper", is provided. The wiper **32** is movable in a direction parallel to the orientation of the potential gradient in the zone free of the segments for allowing variability of the resistance signal derived from the resistor **20.** In a potentiometer the input voltage is that applied across the resistor **20** from pad **28** to pad **30** while the output voltage is measured from pad **28** to the wiper **32,** for example.

Trimming is necessary because of imperfections in material used and because of imperfections in the method of applying a resistive coating upon a substrate. As illustrated in FIG. **2,** the resistive film **22** has a rough, uneven surface with some portions of the substrate **24** being coated with more film than other portions. Trimming compensates to a degree for these manufacturing and material deficiencies.

Referring now to FIGS. **3** and **4** and to FIGS. **5** and **6,** comparisons are illustrated of the characteristics of a resistive element "as manufactured" and then after trimming. FIGS. **3** and **4** are of resistance characteristics while FIGS. **5** and **6** are of voltage ratio characteristics. The X-coordinates of FIGS. **3** and **4,** designated **31** and **33** respectively, refer to the distance or travel along a ring shaped resistive element similar in construction to that shown in FIG. **15.** The Y-coordinates designated **34** and **35** in FIGS. **3** and **4,** respectively, are scaled in millivolts and represent the sum difference between an ideal resistance characteristic and the actual resistance characteristic. The ideal resistance characteristic would be a line superimposed upon the X-coordinates **31** and **33.** As can be easily seen, the resistance characteristic in FIG. **3,** when a constant current is applied, varies between about +8 millivolts and about −9 millivolts in the untrimmed condition. After trimming the variation is between about +2 and about −2 millivolts. FIGS. **5** and **6** have the same X-coordinates as FIGS. **3** and **4.** The Y-coordinates are scale in percent and represent the difference between the actual voltage ratio and an ideal voltage ratio. As can easily be seen, the voltage ratio in untrimmed condition, FIG. **5,** varies between about +0.3 to about −0.2 percent while after trimming, FIG. **6,** the variation is between about +0.09 to about −0.07 percent.

Referring again to FIG. **1,** trimmings are illustrated at locations of the resistor between pairs of the segments **26.** For example, at locations designated **34, 36** and **38** there is illustrated removal trimming; that is, a portion of the resistive film **22** has been removed, thereby reducing the cross-sectional area of the resistive film in order to increase the resistance per unit length at that section where the trimming occurs. In another location on the resistor, designated **40,** also positioned between a pair of the segments **26,** there is an example of the addition of electrically conductive material upon the resistive film, thereby decreasing the resistance per unit length at that section where the trimming occurs. Since there are resistance changes at particular locations, total resistance of the resistor **20** changes so that the characteristic curves are altered.

In the use of terms in the present Specification it will be endeavored to use terms as they are normally employed by persons working in the field of the present

invention. Thus terms such as "conductors" and "conductors of low resistance" and "electrically conductive segment or terminal" refer, for example, to copper or silver elements which are the two most widely used conductive materials; equivalent conductive materials may also be used. More specifically, the bulk resistivity of commercially annealed copper is about 1.72×10^{-6} ohm-centimeters at 20° C, while silver is about 1.6×10^{-6} ohm-centimeters at 20° C. Any suitable material having a bulk resistivity of 10^{-6} to 10^{-4} ohm-centimeters will suffice. Terms such as "material of high resistance" and "resistive film" or "materials of low conductivity" refer, for example, to conductive plastics, carbon films, ceramic-metallic oxide films, metallic films or conductive ceramics. These materials have bulk resistive values of about 0.1 to 100.00 ohm-centimeters at 20° C. Any suitable material having a bulk resistivity of 10^{-4} to 10^{7} ohm-centimeters will suffice. A term such as "insulative" refers to materials that are considered insulators, such as expoxies, phenolics and diallylphthalate. These materials have a bulk resistivity value of about 10^{7} to 10^{13} ohm-centimeters at 25° C. Other materials such as glass or ceramics may be used or other suitable materials having a bulk resistivity of 10^{7} to 10^{25} ohm-centimeters will suffice.

The term "potential gradient" is the rate of change of voltage per unit distance or the change in potential along the resistor created by an applied potential across the resistor; the potential gradient may be conveniently thought of as imaginary lines extending the longitudinal length of the resistor coincident the current flow lines of FIGS. **7** and **8.** "Equipotential lines" are imaginary lines of equal potential disposed at substantially right angles to the potential gradient or current lines.

The term "resistance value" refers to the actual resistance measurement between any two specific locations on the resistor.

Referring now to FIG. **7,** there is illustrated an enlarged view of a portion of a resistor such as that shown in FIG. **1** absent the conductive segments **26.** The FIG. **7** embodiment illustrates a resistive element **42** of high resistance or low conductivity material after trimming (a portion of the material has been removed at the location designated **44**). Also illustrated is a rectangular area **46** representing the location of a wiper in engagement with the surface of the element. Also depicted is a series of equipotential lines **48** drawn in a generally vertical direction and a series of current flow lines **50** which are drawn generally horizontal. As mentioned, the equipotential lines and the current flow lines are a diagramatic illustration caused by an applied potential across the element **42.** The discussion to follow is based in part on two papers presented at the Precision Potentiometer Manufacturers' Association Technical Symposium, Aug. 19, 1963 by Mr. Richard D. Ward and by Dr. Ronald B. Goldner titled, respectively, Conductive Plastic Potentiometer Linearity Correction and Curvilinear Squares As a Method for Assisting in the Design of Linear and Non-Linear Potentiometers.

As the wiper moves along parallel to the current flow lines, it is desirable to have the equipotential lines in a perpendicular orientation so that clear signals are transmitted by the wiper. However, trimming at location **44** distorts the orientation of the equipotential lines and causes the wiper, as illustrated by the area **46,** to intersect simultaneously equipotential lines which are at different potential values. By virtue of the potential difference along the wiper there is a current flow set up in the head of the wiper in order to equalize the potential along the wiper. The introduction of this extraneous current is very undesirable as it will superimpose upon the signal at that location to give an erroneous output.

It is to be noted that trimming may be of any desired length across the width of the element **42**; additionally, the width of the trim (in a direction parallel to the longitudinal axis of the element **42**) may be of any suitable dimension. The dimensions of the trimming depend upon the type of instrument used to make the removal and on the skill of the operator of the instrument.

Another disturbing problem which is illuatrated in FIG. **7** is the broad effect caused by the trim; that is, as illustrated by the distorted equipotential lines **48,** trimming at a particular location will cause a change along a far greater area of the resistor than the actual dimensions of the trimming. Thus, if a trimming is made to offset a particular anomaly at a particular location of the element **42,** the effect of the trimming will not be restricted to that particular location but will extend a considerable distance away from the trimming. This lack of trimming localization is highly undesirable.

Referring now to FIG. **8,** there is illustrated an enlarged view of a resistive element **54** such as shown in FIG. **1,** including a number of closely spaced electrically conductive segments **26'**. There is a trimming of the high resistance material at a location designated **52.** An area designated **56** is used to illustrate the engagement made between the element **54** and a wiper which is designed to move along the surface in a manner already described for the wiper in FIG. **7.** Also illustrated are equipotential lines **58** and current flow lines **60** which are disposed in a perpendicular relationship to the equipotential lines **58.** It is readily understood that since the conductive segment **26'** is of low resistance or high conductivity, any potential difference which appears across a particular segment will be corrected so that the equipotential lines will remain essentially vertical and parallel as illustrated. That is, the segment will average the potential difference at all points along its length.

When trimming becomes necessary it has been found that if the removal or addition of material occurs between a pair of the conductive segments (see location **52**), the disturbance caused by trimming is relatively localized since the conductive segments will act to correct the distortion which appears. Thus, any distortion of the equipotential and current flow lines is generally limited to that part of the element located between a pair of conductive segments. At the same time, the localization of the trimming allows an increased predictability of the change of resistance value at different points along the element **54.** Finally, there is a marked reduction or elimination of the potential difference appearing across the wiper so that superimposition of signals is reduced or eliminated. It is to be understood that FIGS. **7** and **8** are not drawn to scale but are used for illustrative purposes of theory only.

It would appear desirable to have the conductive segments **26'** thin, closely spaced and extending fully across the width of the resistor. However, very practical limitations exist to these three desired goals. There is presently a limit to the narrowness of the conductive segment, using today's economical methods of applying the segments to the resistor. Secondly, if the conductor

material is too closely spaced so as to occupy too large an area relative the resistive material, there will be a shunting effect which will destroy the resistance characteristic of the resistor. Third, though it is possible to have the segment extend fully across the resistor, it is not generally desirable because there is a slight signal disturbance created when the wiper comes into contact with any of the segments.

Referring now to FIGS. **9** and **10** there is a graphical demonstration of the advantage achieved by way of the present invention (FIG. **10**) over the prior art (FIG. **9**). The graph of FIG. **9** illustrates a portion of a resistance characteristic line **70** of a resistor having a structure similar to that shown in FIG. **1** absent the conductive segments **26.** A trimming removal having a width of approximately 0.06 inches was made. Line **72** is a portion of the resistance characteristic of the resistor after trimming and quite clearly indicates, by not being parallel with line **70,** that effects of the trimming extend to a distance of about 0.27 inches in a direction to the left of the trimming and more than 0.30 inches to the right of the trimming.

FIG. **10** illustrates portions of the resistance characteristics of a resistor constructed in a manner similar to that shown in FIG. **1.** Here line **74** illustrates the portion of the resistance characteristic before a trimming removal is made; while line **76** illustrates the portion of the resistance characteristic after trimming. The width of the trimming is about 0.06 inches. It is to be noted that the effect of the trimming extends to the left a distance of about 0.11 inches and extends to the right a distance of about 0.12 inches. Thus, trimming between a pair of conductive segments substantially localizes its effects. Predictability is also enhanced as resistance is a linear function of distance through the trimming location. (Note linearity of line **76** through the trimming location.) Similar tests have been conducted where the trimming consisted of an addition of conductive material to the resistor in order to cause a localized decrease in resistance value. The localization effect due to the conductive segments was again found to be substantially improved over the resistor of the prior art.

Referring now to FIG. **11** there is plotted a resistance characteristic of a resistive element in the as manufactured conditon; that is, a resistive element which was built under usual production conditions. The resistive element does not have any closely spaced conductive segments on it. Once again the X-coordinate represents distance while the Y-coordinate is millivolts (there is a constant current input). Trimming of the resistive element occurs at three locations resulting in the three step increases in millivolt reading illustrated. FIG. **12** represents the resistance characteristic of a resistive element having the closely spaced conductive elements in the as-manufactured condition. The X and Y coordinates are identical to those of FIG. **11** and there is trimming of the resistive elements in three locations as in resistive element used for the FIG. **11** graph.

Comparison of the two plots clearly illustrates the smoothness of the FIG. **12** plot. During normal production, anomalies appear in the resistive element to distort the equipotential lines. Use of conductive segments greatly reduces the distortion so as to be negligible. Hence, signal accuracy is enhanced especially in those sections of the resistive element where trimming has occurred.

Referring now to FIGS. **13** and **14,** the smoothness improvement is again shown when a comparison of voltage ratio characteristic plots is made. FIG. **13** represents the resistive element without conductive segments, while FIG. **14** represents the resistive element with conductive segments.

It is to be noted that the advantages achieved could also be achieved if the electrically conductive segments were not lines but instead were a series of dots or dashes. The averaging effect on the equipotential lines would still occur so as to correct distortions. Also, it is noted that the segments may be divided in half and positioned so that the resistive element is divided into three zones, two outer zones having the spaced conductive segments in alignment and the third or central zones being free of the segments and providing a track for the wiper.

Resistive elements having conductors crossing the elements have been made in the past. However, there has never been a recognition of the advantages of closely spacing electrically conductive segments. The conductors of the prior art were incorporated for completely different purposes than those set forth herein and thus were structurally different. The conductors were connected to terminals, commonly called taps, so that their signals or output could be made available to other electrical circuitry. The purpose of having taps along the length of the resistor was to make the resistive element more versatile by providing an apparent change in the effective resistance by means of shunt circuitry between the taps. Taps are generally not closely spaced as is required and desirable in the preferred embodiments of the present invention. Additionally, by using conductors which were connected to external or other circuitry and expected to provide informational signals efforts were made to prevent disturbances about the conductors. Since trimming causes distortions as explained above, it was likely in the prior art that trimming took place away from the conductors.

Method of Manufacture

The method of manufacturing a resistor of the preferred type comprises the steps of providing a body of high resistance material, such as resistive film **22,** FIG. **1,** placing a plurality of closely spaced electrically conductive segments of low resistance such as segment **26** so that the segments are essentially perpendicular to the orientation of a potential gradient of an applied electrical potential. In more detail, the resistor may be manufactured by providing a substrate of insulative material such as an epoxy, diayllylphthalate, phenol, glass or any other commonly used insulative material. The purpose of insulating material is to support a resistive material and electrically separate the resistive element of a resistor from a surrounding environment such as a metal housing. Generally the substrates are molded to a desired predetermined shape. Next, a layer of film of resistive material (resistive film) is applied to the substrate by any suitable means. For example, conductive resistive films include conductive plastics, carbon films (emulsion of carbon) and ceramic-metallic films may be applied in any suitable fashion such as by spraying, dipping, painting, silk screening, vacuum evaporating or sputtering, all of which are well known methods. In addition, a plurality of conductive segments of low resistance material such as silver, copper or nickel, is applied by spraying, painting or silk screen-

ing and may be applied before, during or after the resistive element is applied, depending upon the choice of material. The sequence of application of the segments and the resistive film is unimportant.

After the molding and deposition of resistive films on the substrate, the resistor is usually machined and cured and provided with terminals for suitably connecting the resistor to other circuit elements (the terminals could be molded into location during the molding of the base).

The resistor of FIG. 1 comprises a glass substrate supporting a deposit of high resistance conductive film which in turn supports a plurality of deposited silver segments. The length of the resistor between the two outermost silver pads is approximately 6.5 inches while the width of the resistor is approximately 0.375 inches. The silver segments are 0.006 inches thick with a spacing of about 0.060 between adjacent segments. Each segment extended approximately 0.187 inches across the width of the resistor. It is noted that the ratio of the spacing between segments to the width of a segment is about 10 to 1.

Referring now to FIG. **15,** there is illustrated a cylindrical potentiometer which is comprised of a moldable plastic insulative substrate **100** in the shape of a hollow cylinder with an outer surface **102** and an inner surface **104.** Deposited upon the inner surface **104** is a resistive film **106** which provides the resistive element of the potentiometer. Deposited upon the resistive film is a plurality of segments **108.** Two pads, **110** and **112,** are connected to terminals **114** and **116** respectively, to allow a potential difference to be applied across the film **106.**

Mechanically connected to an electrically isolated rotatable shaft **120** is a wiper **122** which moves along the resister element from one of the pads to the other. The wiper is connected to a third terminal **118.** In operation, the FIG. **15** embodiment is analogous to the embodiment shown in FIG. **1.** Trimming is illustrated at two locations designated **124** and **126.**

Referring now to FIGS. **16** and **17,** there are illustrated two other preferred embodiments of the present invention. FIG. **16** illustrates a radial or disc resistive element for a potentiometer which is comprised of a cylindrical insulated substrate **130** having two end surfaces one of which supports a conductive resistive film **132** upon which a plurality of electrically conductive segments **134** is deposited. The resistive film **132** is divided into two zones, a first or outer zone containing segments **134** and an inner zone designated **136** which provides the track for a rotatable wiper (not shown). Once again, two pads, **140** and **142** are provided for establishing a potential differential along the resistive element **132.**

FIG. **17** illustrates a preferred embodiment in which the resistive element **150** is applied in a helical fashion to a cylindrical base **152** so as to form what is commonly called a multi-turn resistive element. Once again, the resistive element has a plurality of closely spaced electrical conductors **154** which occupy a first zone on the film while a second zone of the film is provided for the movable wiper (not shown).

It is to be clearly understood that the resistive element having a plurality of closely spaced segments may take a variety of different forms as clearly indicated by the various embodiments, FIGS. **1, 15, 16** and **17.** The invention is not to be limited to those preferred embodiments used for illustration in the Drawings.

Method of Trimming

The method of altering the resistance characteristic of an element of high resistance comprises the steps of providing an element of high resistance having a plurality of closely spaced electrically conductive segments of low resistance where the segments are effectively conductively isolated from each other and from any other elements. Resistance value of the element is controllably increased by removing a portion of the high resistance material between a pair of the segments. The resistance value of the element may be decreased by adding conductive material to the element between a pair of the segments. It is understood that a combination of removing and adding material to various portions of the high resistance element may be necessary to provide the desired resistance and/or voltage ratio characteristics.

In more detail, the trimming method comprises initially comparing the desired resistance and/or voltage ratio characteristic and the actual characteristic and adjusting the actual characteristic by trimming as required. Trimming is done by removing or adding material as explained above.

The removal trimming may be easily accomplished with a burr device, a small rotary cutting tool similar to that used by dentists. Other removal devices include abrasive jets, pulsed liquid jets or lasers. Adding material may be accomplished by the same process used to deposit the conductive segments on the resistive material. It is quite clear that an entire segment or a portion of a segment may be removed if it is found necessary in order to achieve the desired resistance or voltage ratio characteristic (see location **38,** FIG. **1** for example). As long as the removed portion still lies between any two of the segments, the distortion of the potential gradient found in the prior art will be greatly reduced. In a like manner, added conductive material may be used to bridge two adjacent segments in order to substantially lower the resistance of the resistive element. Once again, the distortions usually produced by trimming are greatly reduced by the proximity of other segments.

What is claimed is:

1. A variable resistor with the ability to have its characteristic easily changed comprising in combination:

a. an electrically conductive material having a high resistance;

b. an electrically conductive element for making conductive contact with a first area of the high resistance material, said conductive element and said high resistance material being movable relative one another along said first area;

c. means for connecting said high resistance material and said conductive element to external electrical circuitry; and

d. a plurality of closely spaced electrically conductive segments of low resistance positioned along the high resistance material outside of said first area so as to be essentially perpendicular to the orientation of a potential gradient capable of being established along the high resistance material, said spaced conductive segments being effectively conductively isolated from each other, from other elements of

said variable resistor and from elements external to the variable resistor;

e. said high resistance material having a varied thickness between two of said conductive segments for distorting said potential gradient therebetween and for localizing changes in said potential gradient to an extension of the spacing between said two closely spaced conductive segments in said first area of the high resistance material.

2. A variable resistor as claimed in claim **1** wherein a portion of said high resistance material between two of said conductive segments has an appreciably reduced amount of said high resistance material as compared with other portions of said high resistance material for increasing the resistance of said high resistance material.

3. A variable resistor as claimed in claim **2** wherein another portion of said high resistance material between two of said conductive segments has an amount of electrically conductive material for decreasing the resistance of said high resistance material.

4. A variable resistor as claimed in claim **1** wherein a portion of said high resistance material between two of said conductive segments has an amount of electrically conductive material for decreasing the resistance of said high resistance material.

5. An electrically conductive material of high resistance with the ability to have its characteristic easily changed comprising:

a. a plurality of closely spaced electrically conductive segments of low resistance located within a first part of the high resistance material so as to be essentially perpendicular to the orientation of a potential gradient of an applicable electrical potential and as to define a second part of said high resistance material free of said conductive segments

b. said conductive segments being effectively conductively isolated from each other by said high resistance material, and

c. said high resistance material having a varied thickness between respective pairs of said conductive segments for distorting said potential gradient between said conductive segments within said first part and for substantially limiting said distortion of said potential gradient to an extension of the spacing between said conductive segments in said second part.

6. An apparatus as claimed in claim **5** wherein said varied thickness of said high resistance material between respective pairs of said conductive segments has an appreciably reduced thickness of said high resistance material as compared to other portions of said high resistance material for increasing the resistance of said high resistance material.

7. An apparatus as claimed in claim **6** wherein an electrically conductive material is added to said high resistance material between other respective pairs of said conductive segments for decreasing the resistance of said high resistance material.

8. A method of manufacturing an electrically conductive element of high resistance with the ability to have its characteristic easily changed comprising the steps of:

a. providing an electrically conductive material of high resistance;

b. placing a plurality of closely spaced electrically conductive segments of low resistance in contact with said high resistance material, said conductors being placed so as to be essentially perpendicular to the orientation of a potential gradient of an applied electrical potential difference, and said conductive segments being positioned so as to be effectively conductively isolated from each other;

c. measuring the resistance of said high resistance element by directly contacting said element and sensing said applied electrical potential at said point of contact without contacting said closely spaced electrically conductive segments;

d. removing portions of said high resistance material from between said closely spaced electrically conductive segments for increasing the measured resistance of said high resistance conductive element; and

e. adding high resistance material between said closely spaced electrically conductive segments for decreasing the measured resistance of said high resistance conductive element, thereby easily changing characteristics of said element.

9. A method as claimed in claim **8** wherein said layer of high resistance material is a conductive film coated upon an electrically insulative substrate, and additionally comprising the steps of:

forming said film in two zones;

positioning the conductive segments in parallel alignment in one of said zones while the second of said zones is provided to make contact with a movable electrically conductive element.

10. A method of altering the resistance characteristic of an electrically conductive element of high resistance where the alteration results in a change in the resistance of said element, the method comprising the steps of:

a. providing an electrically conductive element of high resistance material;

b. placing a plurality of equally spaced electrically conductive segments of low resistance on said electrically conductive element;

c. arranging said equally spaced conductive segments so as to be essentially perpendicular to the orientation of a potential gradient of an applied electrical potential, said conductive segments being so arranged as to be effectively conductively isolated from each other and from other elements;

d. contacting said electrically conductive element with a contact element to measure said resistance characteristic thereof; and

e. altering a section of said high resistance material between two of said equally spaced conductive segments so that said sections has an appreciably changed amount of resistive material causing a variation in the resistance of said section as compared with other equal sections of said high resistance material.

* * * * *