United States Patent [19]

Russell

[11] **3,772,626**

[45] **Nov. 13, 1973**

[54] **BOBBIN**

[75] Inventor: **Leroy E. Russell,** Washington, Mo.

[73] Assignee: **Von Weise Gear Co.,** St. Louis, Mo.

[22] Filed: **May 16, 1972**

[21] Appl. No.: **253,795**

[52] **U.S. Cl.** **336/192,** 310/194, 336/198

[51] **Int. Cl.** **H01f 27/28**

[58] **Field of Search** 336/192, 208, 198; 310/194

[56] **References Cited**

UNITED STATES PATENTS

3,371,302	2/1968	Mas	336/192 X
1,647,372	11/1927	Pressley	336/192 X
3,189,772	6/1965	Wingler et al.	310/194 X
3,259,864	7/1966	Marzolf et al.	336/198 X
2,435,871	2/1948	Camras	336/192 X
2,858,514	10/1958	Henderson et al.	336/192 X

FOREIGN PATENTS OR APPLICATIONS

108,583	1/1968	Denmark	336/208
456,739	7/1968	Switzerland	336/192
1,524,583	5/1968	France	336/192
922,565	4/1963	Great Britain	336/192

Primary Examiner—Thomas J. Kozma
Attorney—Ralph W. Kalish

[57] **ABSTRACT**

An electrical motor stator bobbin integrally formed of electrical insulating material having relatively enlarged end flanges and intervening sleeve or core for receiving thereabout the electrical winding. Said bobbin is provided with tubular members extending between said flanges and opening at its ends therethrough for receiving therein the ends of the winding and the joined portions of the coil leads. The flanges are provided with an arrangement of openings so that the leads may extend outwardly from the same flange or from opposite flanges.

5 Claims, 8 Drawing Figures

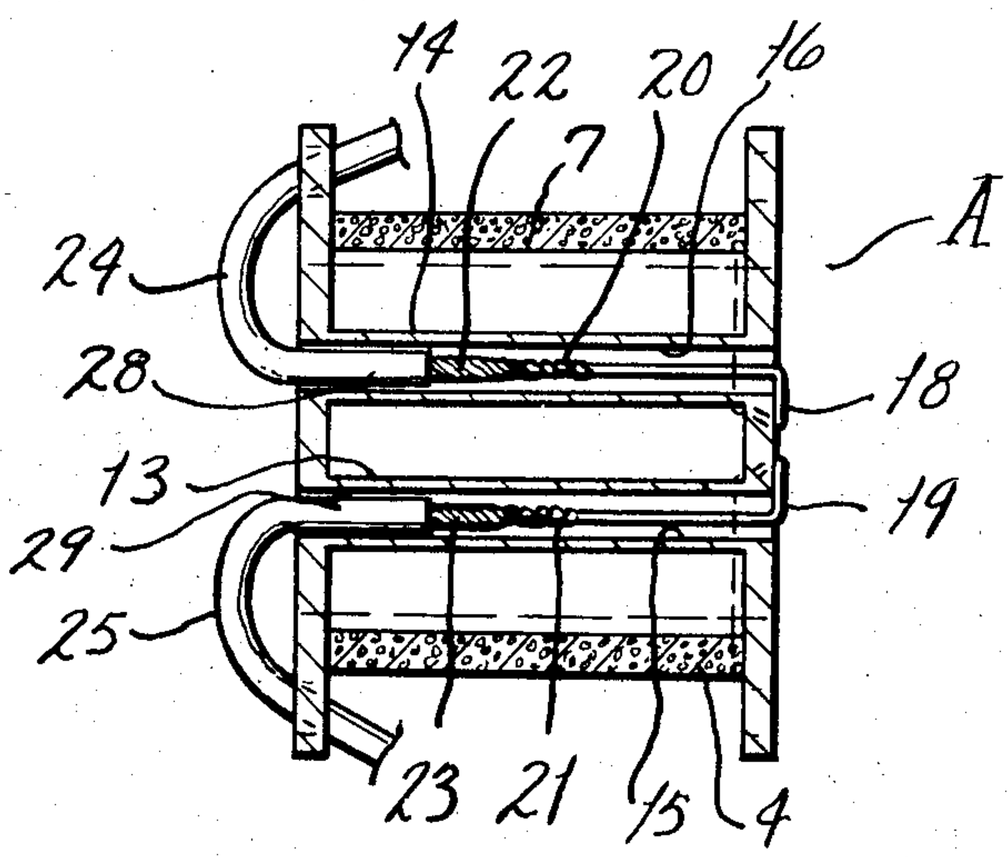

FIG. 1

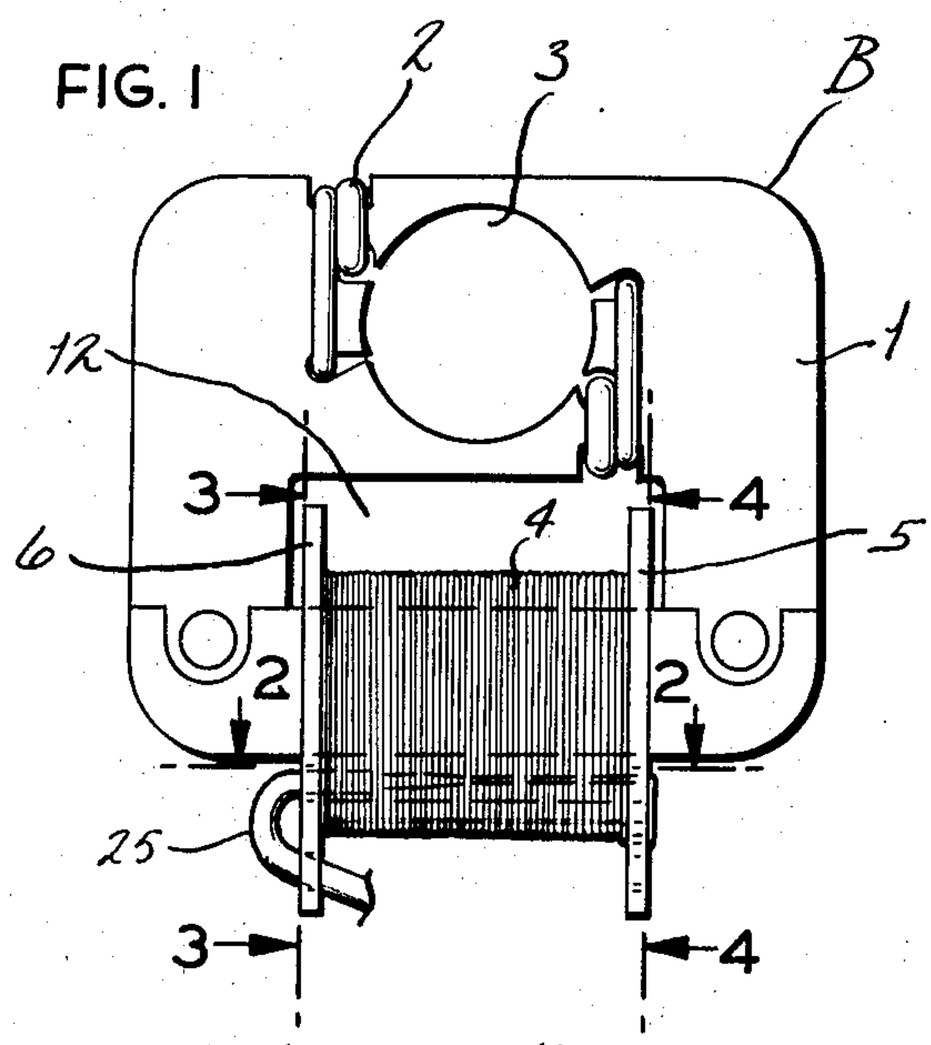

FIG. 3

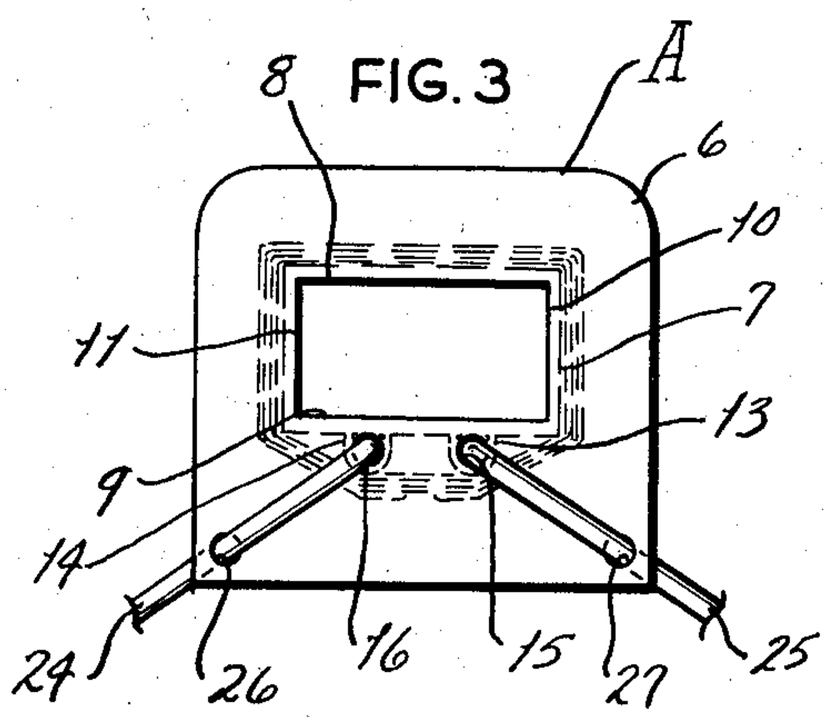

FIG. 2

FIG. 4

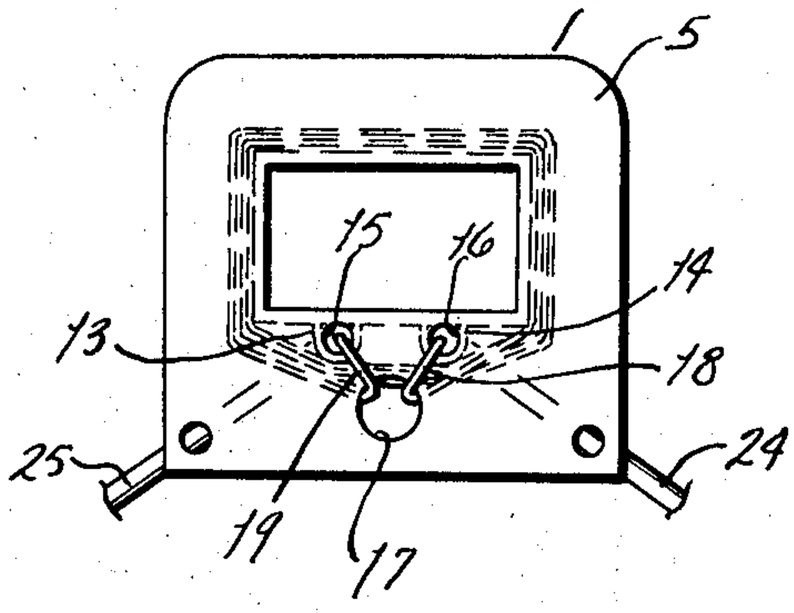

FIG. 5

FIG. 6

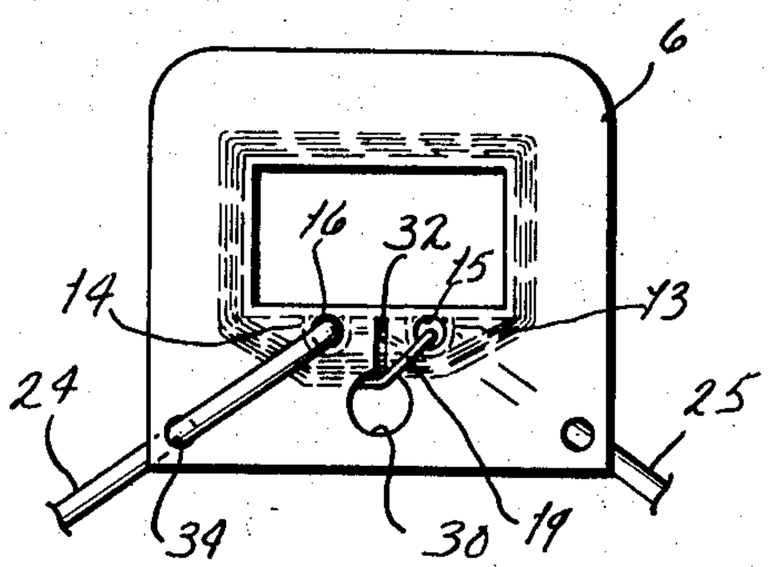

FIG. 8

FIG. 7

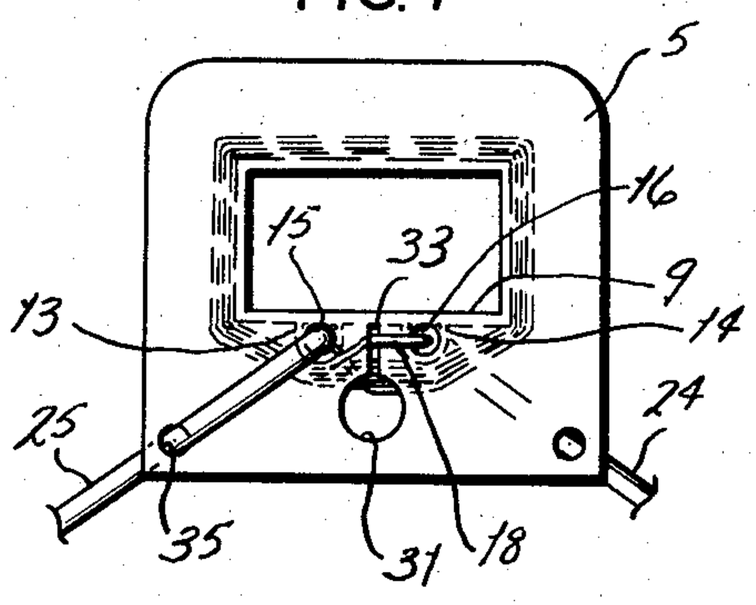

BOBBIN

BACKGROUND AND SUMMARY OF THE INVENTION

This invention relates in general to electrical motors and, more particularly, to a stator bobbin therefor.

Heretofore in the winding of conductive wire about an electric motor bobbin, insulating tape has been used for several steps in such operation, such as in securing the inner end portion of the coil to the bobbin core; in wrapping the joined ends of the wire and the exposed cable leads; and in enclosing the coil to prevent undesired displacement of the leads. Such relative liberal usage of tape has been a source of marked expense and, obviously, the application of such tape has required necessary, costly labor.

Therefore, it is an object of the present invention to provide a bobbin of the character stated which embodies means for receiving and retaining the coil ends without resort to insulating tape.

It is another object of the present invention to provide a bobbin of the character stated which promotes low-cost, high-volume coil winding operations.

It is a further object of the present invention to provide a bobbin of the type stated which maintains the coil leads against displacement during usage without resort to extraneous means; and which is adapted to permit of facile inspection of the joint between the winding end and the coil leads.

It is another object of the present invention to provide a bobbin of the type stated which may be most cheaply manufactured and which is reliable and durable in usage.

BRIEF DESCRIPTION OF THE DRAWINGS

FIG. **1** is an elevational view of a motor stator containing a bobbin constructed in accordance with and embodying the present invention.

FIG. **2** is a horizontal transverse sectional view taken on the line **2—2** of FIG. **1.**

FIG. **3** is a vertical transverse sectional view taken on the line **3—3** of FIG. **1.**

FIG. **4** is a vertical transverse sectional view taken on the line **4—4** of FIG. **1.**

FIG. **5** is an end view of another form of bobbin constructed in accordance with and embodying the present invention, illustrating same in operative condition with a winding thereabout.

FIG. **6** is a vertical transverse sectional view taken on the line **6—6** of FIG. **5.**

FIG. **7** is a vertical transverse sectional view taken on the line **7—7** of FIG. **5.**

FIG. **8** is a horizontal transverse sectional view taken on the line **8—8** of FIG. **5.**

DESCRIPTION OF THE PRACTICAL EMBODIMENTS

Referring now by reference characters to the drawing which illustrates practical embodiments of the present invention, A generally designates a bobbin for incorporation in a laminated stator **1** of an electric motor B, such as, for example, of the low-torque, single-phase type. Motor B is of conventional character incorporating shading coils **2**, a rotor housing **3**, and with exciting winding **4** provided about bobbin A. Accordingly, motor B does not form a part of the present invention, but is set forth for illustration purposes only.

Bobbin A is fabricated of suitable electrical insulating material, such as, nylon or the like, and incorporates a pair of planar parallel, projecting end flanges **5,6** formed at the end of an intervening core **7**, which latter comprises upper and lower walls **8,9** and side walls **10,11**; said core opening at its ends through flanges **5,6** thereby defining a receptacle for the intervening portion of stator **1.** The walls of core **7** are located spacedly inwardly from the proximate edge of the related flanges **5,6** for defining a volume **12** to receive winding **4** which, for example, is comprised of copper wire.

Formed in the outer face of wall **9**, and being coextensive therewith, is a pair of axially parallel, spaced-apart tubular members **13,14** which open at their opposite ends through flanges **5,6** for defining passageways **15,16,** respectively. Said tubular members being thus integral with bobbin A are formed of the same electrical insulating material. As best seen in FIGS. **1** and **4,** winding **4** will extend about the exterior of said members **13,14.**

Also provided in flange **5** substantially intermediate the end opening of tubular members **13,14,** but spaced apart outwardly thereof, is a relatively enlarged aperture **17.** The inner end **18** of winding **4** is led outwardly through aperture **17** and thence inwardly of passage **16** of tubular member **14.** The outer end **19** of winding **4** is led outwardly from volume **12** through aperture **17** and then is turned inwardly for projection into passage **15** of tubular member **13.**

As may best be seen in FIG. **2,** within passages **15,16,** winding ends **18,19** are each fixed, as by brazing, at **20,21,** respectively, to the exposed end **22,23** of a customary coil lead **24,25,** respectively. The said coil leads **24,25** thus project outwardly of the ends of passages **15,16** in flange **6** for the usual circuit-establishing purposes. As shown in FIGS. **1** to **4,** said leads may, if desired, be returned through guide openings, as at **26,27,** formed in flange **6** (see FIG. **3**).

It will thus be seen that the union of the ends **18,19** of winding **4** and the respective coil leads is maintained within passageways **15,16,** the walls of which provide complete insulation so that the usual wrapping of electrical tape about the developed joint is obviated. Accordingly, tubular members **13,14** constitute protective chambers, the use of which both facilitate winding of bobbin A, as well as any inspection or repair required of the union, while simultaneously obviating the heretofore accepted utilization of relatively substantial quantities of insulating tape. Additionally, the inner diameters of passageways **15,16** are substantially the same as the outside diameter of the insulated portions of leads **24,25,** as indicated at **28,29,** so that a reasonably snug fit is developed therebetween; allowing of relative movement of the leads therein under limited pressure for assembly purposes, but maintaining said leads against undesired displacement during usage. The relative maintenance of leads **24,25** by tubular members **13,14** prevent the development of any undue strain upon the coil leads. Prior to the present invention tape was used to secure the inner end of the coil in appropriate position; as well as to enwrap the joined ends of the coil and the leads; and to enclose the coil for preventing undesired displacement of the leads.

From the foregoing the required assembly is immediately apparent as leads **24,25** may be inserted through passageways **15, 16** to present their exposed portions

22,23 for brazing with the related ends of winding 4. Subsequent thereto, leads 24,25 are withdrawn sufficiently through passageways 16,15 to locate the developed union, as at 20,21, substantially centrally of the aforesaid passageways.

Referring now to FIGS. 5–8, inclusive, A' designates a bobbin which is of the same general construction as bobbin A above described so that like parts will bear the same reference numerals. Formed in each end flange 5,6 of bobbin A' equidistant from the proximate end openings of passages 15,16, but being located outwardly toward the adjacent edge of the related flange, is an aperture 30,31, respectively, which is continuous in its core-adjacent portion with a narrow, slot-like opening 32,33 which progresses between tubular members 13,14 for terminating at the adjacent core wall 9. The inner end 18 of winding 4 is directed through aperture 31 and thence through opening 33 for direction into passage 16 of tubular member 14; for joinder, in the manner above described, to the exposed end of coil lead 24. The outer end 19 of winding 4 is directed outwardly of flange 6 through aperture 30 and is then directed returningly inwardly through passage 15 of tubular member 13 for engagement to the exposed end of coil lead 26. It will thus be seen that the ends 18,19 of winding 4 are directed through the respective passageways 16,15 in opposite directions so that coil lead 24 will be located outwardly of flange 6, while coil lead 25 will be presented beyond flange 5. Each of said leads 24,25 may, if desired, be redirected through the respective flanges by extension through guide openings 34,35 within flanges 6,5, respectively.

As shown hereinabove, bobbin A is designed to provide for coil leads 24,25 extending from the same end thereof, while bobbin A is constructed to conduce to the extension of said leads from opposite ends thereof in order that the same are presented for particular applications. Thus, the incorporation of apertures 30,31 and slot-like openings 32,33 in flanges 5,6, respectively, promote the desired cable direction.

In view of the foregoing, it is to be seen that the present invention eliminates the need for insulating tape in the formation of stator windings as has been the practice to the present time. The obviation of the need for tape brings about a most substantial relative cost reduction, both from the standpoint of material, as well as labor; while simultaneously rendering any repair or inspection easily achievable.

Having described my invention what I claim and desire to obtain by Letters Patent is:

1. In combination with a predetermined length of uninsulated conductive wire having a normally inner end and an outer end, and a pair of insulated leads having exposed ends, means joining the exposed ends of said insulated leads to said conductive wire inner and outer ends, the improvement comprising an electrical motor stator bobbin being fabricated of dielectric material and having parallel end flanges, means defining a core between, and connected to, said end flanges for winding disposition of said conductive wire thereabout, a pair of enclosed tubular passageways extending between said end flanges and opening at their ends there-

through, the cross section of said passageways being greater than the diameter of the conductive wire and substantially the same as the cross section of the insulated leads for tending to inhibit displacement of said leads therein, the joined inner and outer ends of said conductive wire and said insulated lead ends being disposed within said passageways thereby protecting the joint developed therebetween.

2. In combination with a predetermined length of uninsulated conductive wire having a normally inner end and an outer end, and a pair of insulated leads having exposed ends, means joining the exposed ends of said insulated leads to said conductive wire inner and outer ends, the improvement as defined in claim 1 and further characterized by one end flange of said bobbin having an opening located between the adjacent ends of said tubular passageways and outwardly thereof, said outer and inner ends of said wire being directed from the winding thereof about said core outwardly through said opening and thence directed returningly toward the proximate flange for extension into the respective tubular passageway.

3. In combination with a predetermined length of uninsulated conductive wire having a normally inner end and and outer end, and a pair of insulated leads having exposed ends, means joining the exposed ends of said insulated leads to said conductive wire inner and outer ends, the improvement as defined in claim 2 and further characterized by said other end flange having a pair of guide openings for projection therethrough of portions of said insulated leads extending outwardly from the respective tubular passageways.

4. In combination with a predetermined length of uninsulated conductive wire having a normally inner end and an outer end, and a pair of insulated leads having exposed ends, means joining the exposed ends of said insulated leads to said conductive wire inner and outer ends, the improvement as defined in claim 1 and further characterized by an opening formed in each end flange between but slightly outwardly of the proximate ends of the tubular passageways, there being an elongated narrow aperture communicating with one of said openings and extending therefrom in a direction of the core and terminating between the proximate ends of the related passageways, the inner end of said conductive wire passing from said winding through said elongate narrow aperture and thence returningly into the related passageway, the outer end of said conductive wire extending outwardly through one of said openings and thence being directed returningly into the related passageway.

5. In combination with a predetermined length of uninsulated conductive wire having a normally inner end and an outer end, and a pair of insulated leads having exposed ends, means joining the exposed ends of said insulated leads to said conductive wire inner and outer ends, the improvement as defined in claim 1 and further characterized by said tubular passageways being provided outwardly of said core, said passageways being mutually axially parallel and being axially normal to the plane of said end flanges.

* * * * *