United States Patent [19]

Clarricoats

[11] **3,772,619**

[45] **Nov. 13, 1973**

[54] **LOW-LOSS WAVEGUIDE TRANSMISSION**

[75] Inventor: **Peter J. B. Clarricoats,** London, England

[73] Assignee: **Andrew Corporation,** Orland Park, Ill.

[22] Filed: **June 4, 1971**

[21] Appl. No.: **150,035**

[52] **U.S. Cl.** ..... **333/95 R,** 333/21 R, 333/98 M

[51] **Int. Cl.** **H01p 3/12,** H01p 1/16

[58] **Field of Search** ..... 333/95 R, 98 M, 21 R, 333/21 A

[56] **References Cited**

OTHER PUBLICATIONS

Kerzhentseva, Conversion of Electromagnetic Waves in Waveguides of Circular Cross Section in Cases of Continuous and Staggered Alterations of the Surface Impedances of the Walls in Proceedings of the Third Collquium on Microwave Communication, Budepest April 1966: title page & pp. 775–779.

Primary Examiner—Rudolph V. Rolinec
Assistant Examiner—Marvin Nussbaum
Attorney—C. Frederick Leydig et al.

[57] **ABSTRACT**

High-frequency signals are transmitted with very low energy loss in corrugated generally circular waveguide employing the hybrid HE_{11} mode of transmission. Guide parameters for production of lowest losses are described.

10 Claims, 6 Drawing Figures

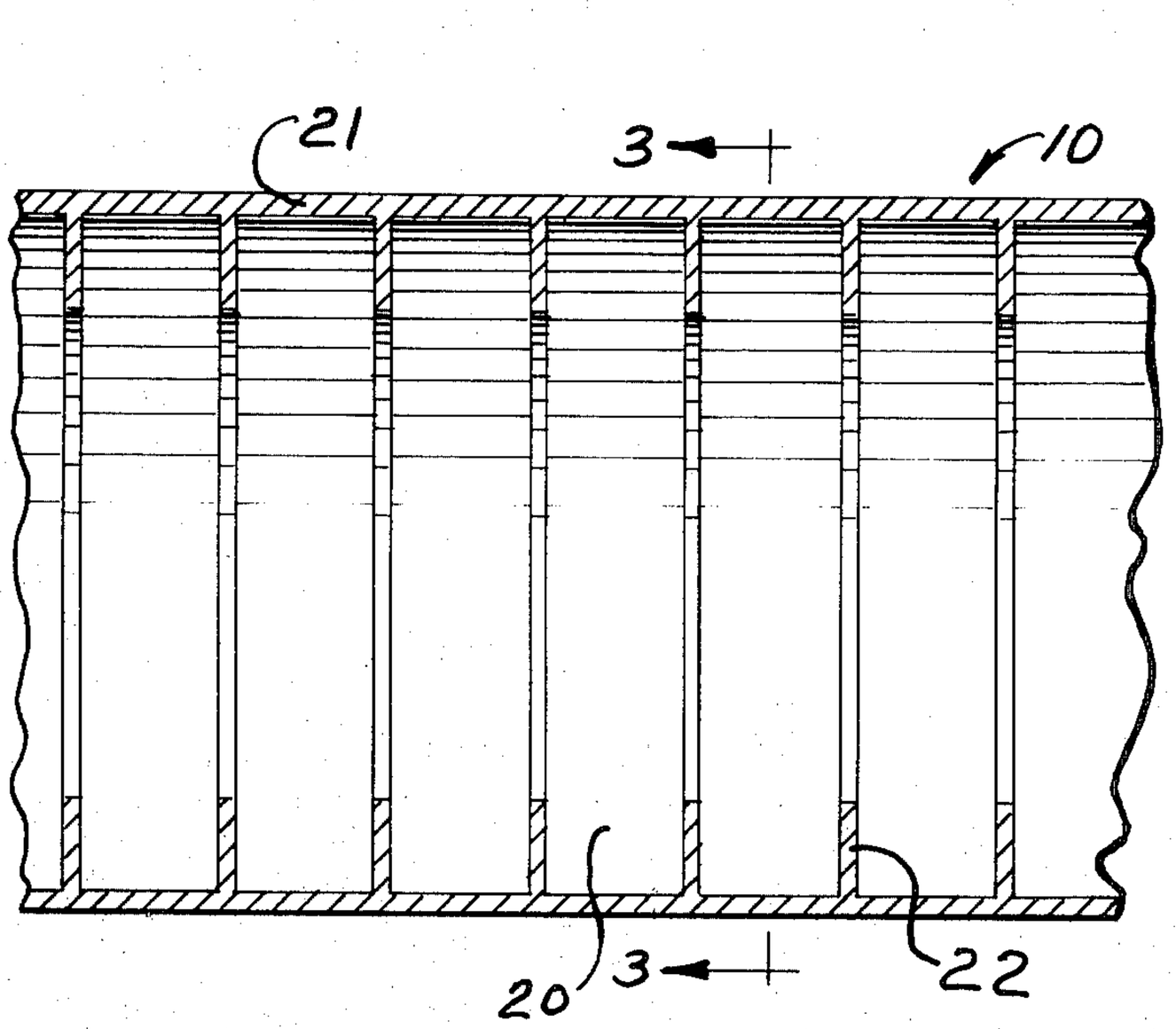

Fig. 1

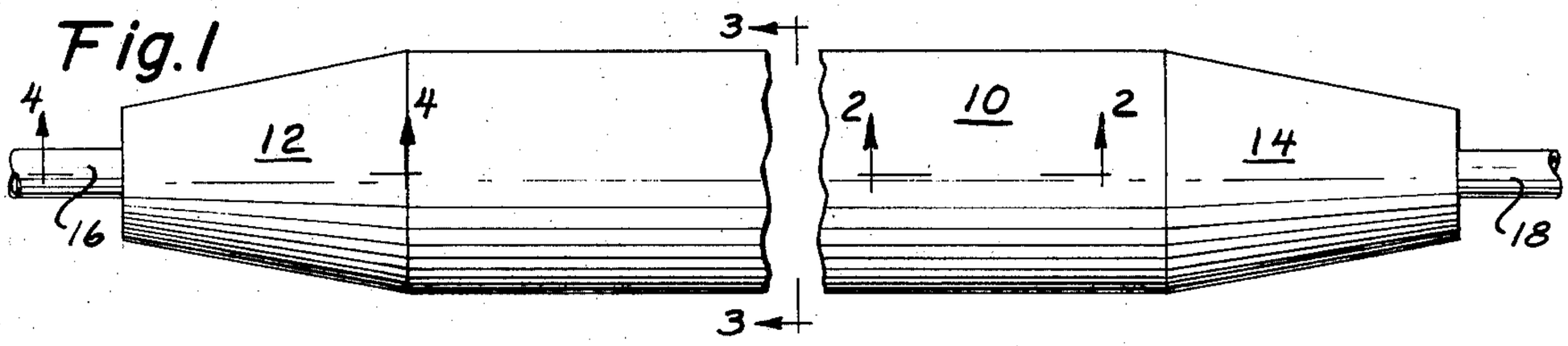

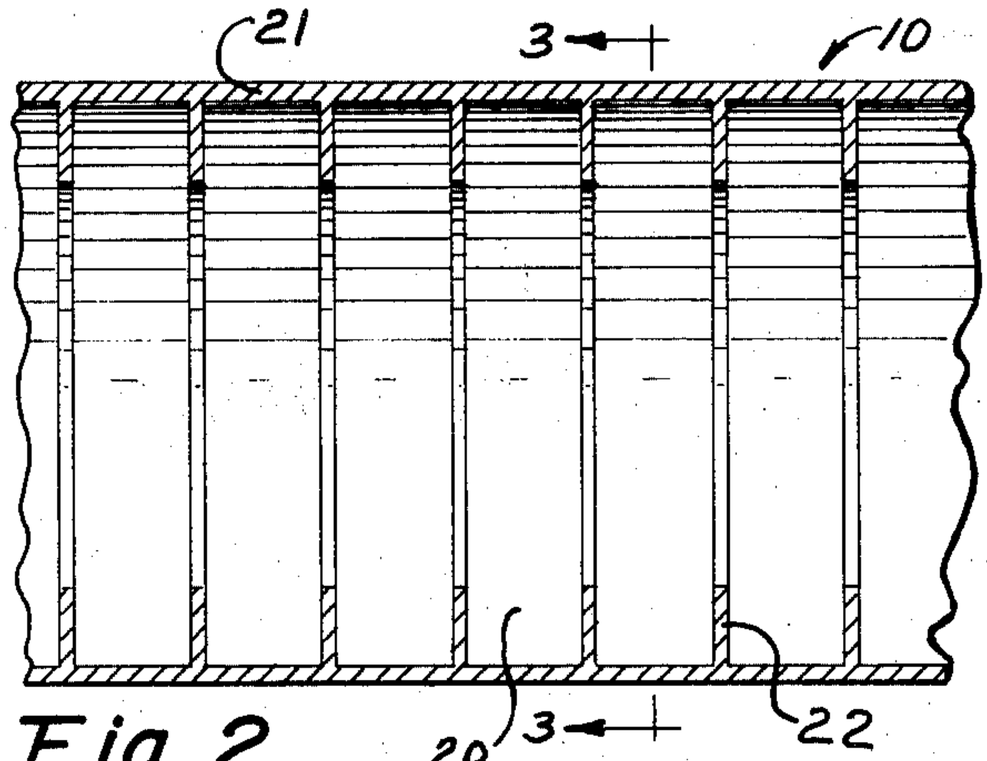

Fig. 2

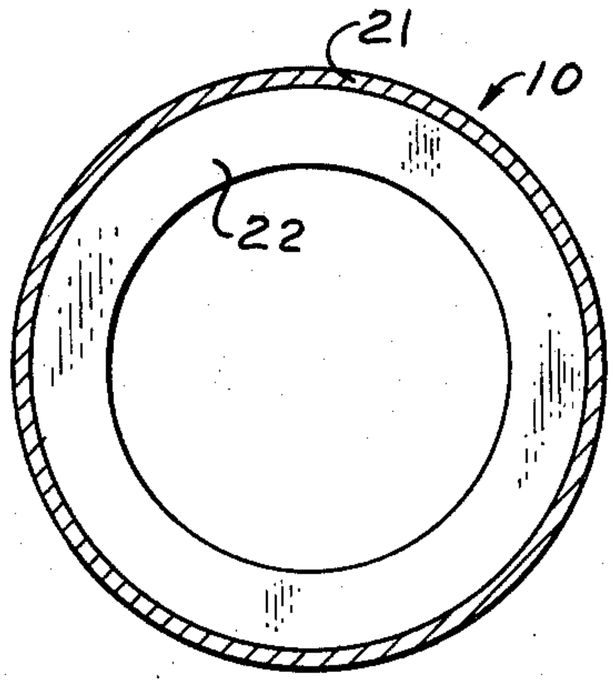

Fig. 3

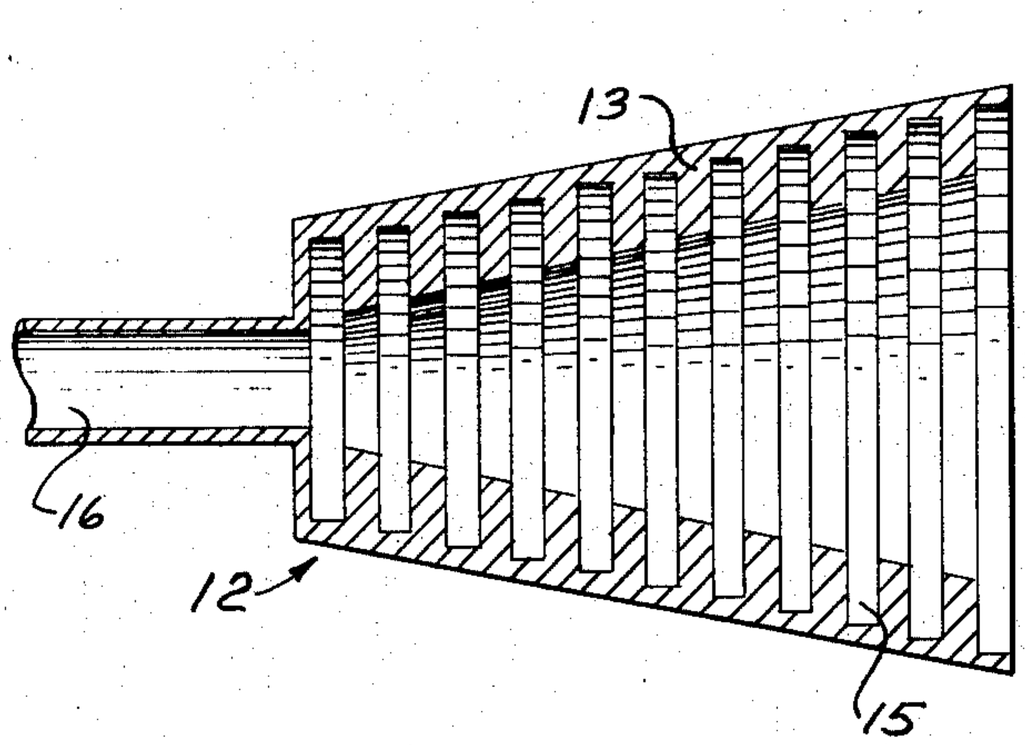

Fig. 4

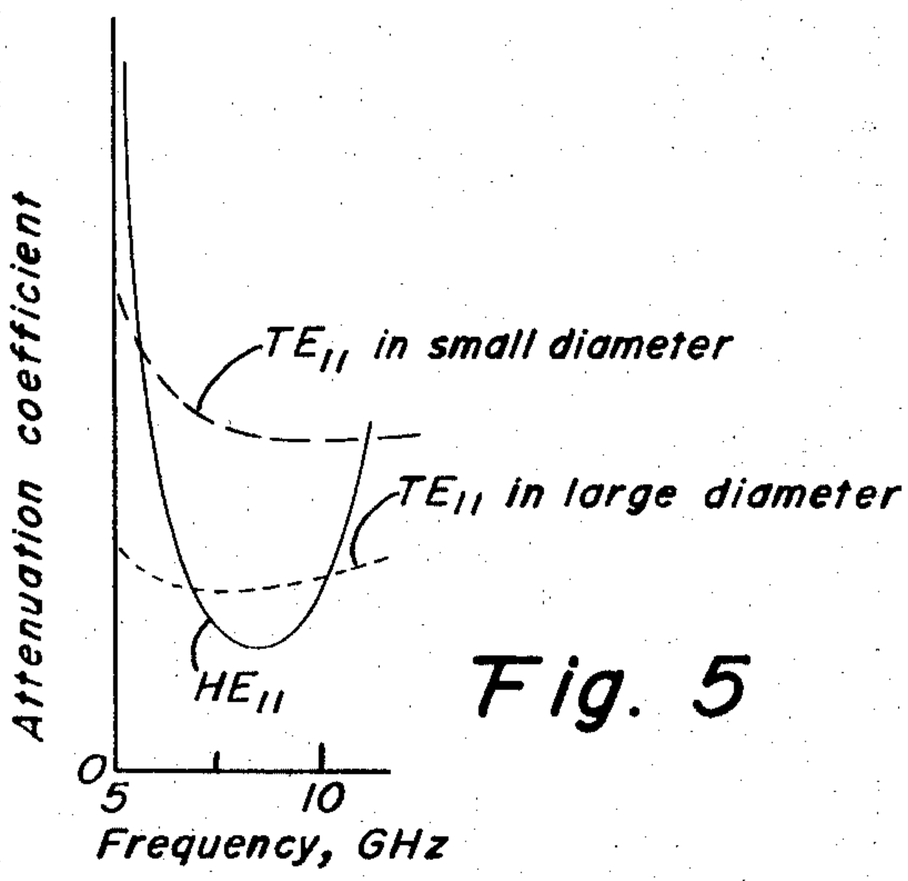

Fig. 5

Fig. 6

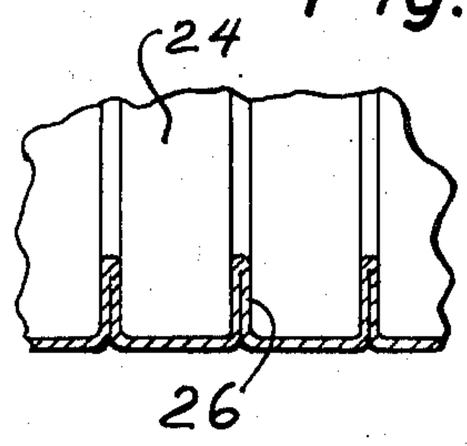

INVENTOR
PETER J.B. CLARRICOATS
BY
ATT'Y.

LOW-LOSS WAVEGUIDE TRANSMISSION

This invention relates to waveguide, and more particularly to methods and apparatus for microwave transmission employing corrugated waveguide. To facilitate understanding of the discussion herein, it should be preliminarily noted that the term "corrugated waveguide" is often employed in the art to described two fairly distinct types of structures. In one type of construction so described, an originally smooth-wall tubular structure is corrugated to provide mechanical characteristics of flexibility and stength, the electrical characteristics, particularly propagation modes, being more or less the same as in smooth-wall guide of the same cross-sectional shape. Stated otherwise, the prime or sole purpose of such corrugation is to impart to a conventional waveguide the well-known advantageous mechanical properties of flexible corrugated tubing. Corrugated waveguide of this type is now in widespread use in microwave transmission systems. In such waveguide, the corrugation depth is normally an essentially negligible fraction of a wavelength at the frequency of transmission, to minimize the difference between electrical characteristics of such waveguide and those of a corresponding smooth-wall waveguide.

The other type of construction to which the description "corrugated waveguide" is commonly applied is substantially different in that only corrugation of the internal walls is intended to be described. The corrugations are of a depth constituting a sufficient fraction of the wavelength of the transmitted electromagnetic energy to constitute an "impedance surface" and thus to have major effects on the transmission, particularly as regards propagated and suppressed transmission modes or field patterns. It is in this latter sense that the term "corrugated waveguide" is herein used, as opposed to small undulations for mechanical purposes.

Corrugated waveguide has heretofore been considered to be of utility only for certain specialized purposes substantially different from the transmission of signals over substantial distances which is the most common use or function of commercially manufactured waveguide. Corrugated waveguide has long been employed, for example, to produce "slow-wave" propagation in structures such as charged-particle accelerators, etc. Such propagation occurs in slow-wave modes which in some cases bear designations similar to those of fast-wave modes, and it will be understood that references hereinafter to particular propagation modes refer to fast-wave, not slow-wave, modes.

Another use more recently made of corrugated waveguide is in connection with flared-horn radiators. Flared horns with suitable internal corrugation have for some time been known to have certain advantages in radiated pattern as compared with smooth-wall horns. To provide transistional coupling between ordinary waveguide and such a corrugated horn, it is known to employ a short length of corrugated waveguide between the ordinary waveguide which constitutes the feed of the horn and the small end or throat of the flared corrugated horn to convert the TE_{11} electromagnetic field pattern or mode in which the energy is propagated in the smooth-wall waveguide to the HE_{11} pattern or mode for which the corrugations in the horn are effective in producing the desired far-field radiation pattern of the horn. (It should be understood that the term "waveguide" as used herein refers to a structure of uniform or repetitive cross-section along its length, as distinguished from a flared horn or similar device, although a flared structure has sometimes been included in this term in the prior art.)

In the prior uses just described, corrugated waveguide has been employed for fast-wave transmission only in length sufficient to produce the desired mode conversion, which is only a few wavelengths. In such lengths, attenuation is negligible in its effect on overall system efficiency; because of the relatively high wall area within a corrugated guide, it was believed by workers in the art before the present invention that the attenuation per unit length in such waveguide is high, and accordingly the use of such waveguide in place of conventional waveguide as a transmission medium over substantial distances appears to have been considered prohibitive as regards overall attenuation loss.

The present invention flows from theoretical determination and experimental verification that the belief heretofore held in the art that corrugated waveguide has substantially higher attenuation than comparable smooth-wall waveguide because of the relatively large internal surface area per unit length of a corrugated waveguide is erroneous. It has been found, according to the invention, that for the hybrid HE_{11} mode in properly designed corrugated circular waveguide, the attenuation is readily made far lower than that practically obtained with the TE_{11} mode commonly employed in circular smooth-wall waveguide. As a result of this finding, the invention provides a novel method and apparatus for waveguide transmission of microwave energy with relatively low attenuation as compared with any practical transmission in smooth-wall waveguide.

The basic concept or theory of the invention may be briefly stated qualitatively as the discovery that although the internal surface exposed for absorption of energy due to imperfect conductivity is indeed much larger than in the case of a smooth-wall guide, the surface-currents by which attenuation loss is produced occur in substantial magnitude in the HE_{11} mode only in such limited portions of the exposed conductive surface as to produce attenuation which is not only far less than was believed inherent in such a construction before the invention, but indeed far less than in the case of any smooth-wall guide capable of practical use with the dominant TE_{11} mode. Further, it is found that such low attenuation can be obtained in structures wherein losses due to conversion of the propagated mode to other modes are also low. There is thus possible the transmission of microwave signals in waveguide over long distances with substantially lower loss than that heretofore practically obtainable.

The corrugated waveguide employed in the present invention is generally similar to corrugated waveguide heretofore employed for other purposes, as discussed above, the most obvious difference being the length, which is of course much longer than corrugated guide heretofore known. The corrugated guide of the present invention is characterized by a length sufficient to make transmission losses a major factor of system performance, such as a length exceeding two hundred wavelengths. (It will be understood that the term "wavelength" as used herein, unless otherwise stated, refers to free-space wavelength, as is common practice in the art.)

Further constructional features which are found desirable for production of low losses, along with more complete explanation of the advantages of the inven-

tion, are best understood in connection with the illustration of the invention in the drawing, in which:

FIG. 1 is a more or less schematic illustration of a microwave transmission system incorporating the method and apparatus of the invention;

FIG. 2 is a longitudinal sectional view of a waveguide of the system of FIG. 1, taken along the line 2—2 thereof;

FIG. 3 is a transverse sectional view taken along the line 3—3 of FIGS. 1 and 2;

FIG. 4 is a longitudinal sectional view of a transition section of the system of FIG. 1, taken along the line 4—4 thereof;

FIG. 5 is a graph or chart illustrating values of attenuation as a function of frequency for certain corrugated and uncorrugated guides excited in their respective dominant modes; and

FIG. 6 is a fragmentary sectional view showing the formation of corrugated waveguide by bending or similar working of metal strip forming the wall of a tube.

FIG. 1 shows, more or less schematically, a typical transmission system embodying the invention, the parts or portions thereof being more fully shown in FIGS. 2 to 4. A corrugated waveguide 10, of a length of from about two hundred wavelengths up to a number of miles, is connected at its ends to transitions or mode-converters 12 and 14. In the illustrated embodiment, as seen in FIG. 4, the transition 12 is an internally corrugated structure of flared cross-section similar to the corrugated flared horns heretofore employed for external radiation, being a conical hollow conductor 13 having internal grooves 15 of a depth in the neighborhood of a quarter wavelength. The conical conductor 13 is connected at its small end to a relatively short length of conventional round or generally round (for example elliptical) waveguide 16. The transistion 14 may be of the same construction, with an associated conventional smooth-wall guide 18. The conventional waveguides 16 and 18 may be connected to any known energy-generation and/or utilization equipment, directly or by further mode-transition provisions and waveguide or cable links or, if so desired, the transistion at one end may be replaced by a provision for converting to unguided radiation such as an antenna feed.

The purpose of the flared transition sections 12 and 14 in the illustrated embodiment is of course to convert the energy propagated in the TE_{11} mode in the conventional smooth-wall guide 16 or 18 to the HE_{11} mode propagated in the main guide 10 (and vice versa at the other end), and at the same time to provide an impedance-transformation substantially free of reflections. It is well known that a corrugated guide or horn suppresses the TE_{11} mode of propagation, energy of this mode being rapidly converted to the HE_{11} mode within the distance represented by a few corrugations. Thus in principle the conversion might be accomplished by mere coupling of the end of a larger smooth-wall guide directly to the corrugated guide 10, and the employment of such a couping (or of any other type of feed or termination) is within the contemplation of the invention.

The construction of the waveguide 10 is shown in FIGS. 2 and 3. Annular grooves or corrugations 20 in the circular waveguide wall 21 are formed and spaced by annular rings or teeth 22. The dimensioning of the elements is selected to produce the low-loss hybrid-mode fast-wave transmission of the invention.

For optimum propagation of the hybrid HE_{11} mode, the corrugation depth must be greater than a quarter wavelength but less than a half wavelength, and the use of any such corrugation depth is within the broad contemplation of the invention. However, it is found that for lowest attenuation the corrugation depth should be from 0.28 to 0.38 wavelength, the optimum depth varying somewhat with the inner radius selected and with bandwidth and similar requirements. The inner radius should, for desirably low attenuation, be greater than two-thirds of a wavelength. The axial length or width of each groove is less than one-half wavelength and may be as little as one-tenth wavelength. For best results this dimension is between one-third and one-fifth wavelength. Ideally, the width or axial thickness of the rings or teeth which define the inner radius is made very small, such as one-fiftieth of the groove-width, but teeth of a width of as much as one-third of the groove width can be employed. The most desirable ratio of tooth width (groove spacing) to groove width when considering ease of fabrication, is in the range of from one-twelfth to one-eighth, or approximately one-tenth. Stated otherwise, the overall repetition interval is desirably approximately 1.1 times the groove width.

The nature and advantages of the invention can be best understood from consideration of certain practical aspects of the design of waveguide systems for transmission of signals over appreciable distances. Attenuation of the propagated mode employed is of course a primary factor of consideration. However an equally important factor from a practical standpoint is conversion of the transmitted energy to propagation modes other than the desired mode, which likewise results in practical loss of much of the energy. Accordingly, for any given waveguide shape and transmission frequency, the waveguide size is normally chosen by balancing the two factors. For most long-length uses, the dominant or fundamental mode is employed and the waveguide size is selected to discriminate against higher modes. From the standpoint of preventing mode conversion, it is desirable to select a size whereat all higher modes are suppressed, and such dimensioning is commonly employed where the guide construction involves bends, possible wall-surface defects, etc., which contribute greatly to mode conversion. However with waveguide constructions more closely approaching the theoretically ideal conditions which would produce no mode conversion (complete and exact uniformity of cross-section, complete absence of wall-surface defects and irregularities, etc.) it is not uncommon to reduce attenuation of the fundamental mode by overmoded operation, i.e., by employing a size whereat higher modes can exist. The balance between loss of energy by attenuation of the dominant mode and loss of energy by mode-conversion is further influenced by the fact that readiness of conversion of energy from a lower mode to a higher mode is not necessarily related to the closeness or remoteness of the cut-off frequencies of modes which can be propagated. For example, in smooth-wall round guide, susceptibility to conversion of the fundamental TE_{11} mode to the next higher-frequency cut-off modes is relatively small as compared to the susceptibility to conversion to the still-higher TM_{11} mode, so that as the size of a smooth-wall guide is increased, the susceptibility to losses of energy by mode-conversion is relatively small until the low-frequency cut-off size for the TM_{11} mode is reached. Accordingly, in some wave-

guide systems, particularly those employing extremely precise wall surfaces, a size is selected which produces moderate overmoding, i.e., which is sufficient to permit propagation of adjacent higher modes, but is insufficient to permit propagation of modes to which the predominant or fundamental mode is most readily converted.

The same general principles are applicable to corrugated waveguide employed for transmission of the HE_{11} mode. As in the case of smooth-wall waveguide, it is possible to reduce attenuation of the dominant mode to any desired degree by sufficient enlargement of the guide. However the practical limitation on such enlargement in producing low-loss transmission lies in the appearance of substantial conversion to higher modes whose existence becomes possible as the enlargement continues. By employment of a guide size in which higher modes cannot exist, or in which the only higher modes which can exist have low probability of mode-conversion from the fundamental mode or can be readily suppressed, energy losses are essentially limited to the wall losses (attenuation) of the fundamental mode. These have been found by the invention to be very low as compared with the attenuation of the TE_{11} mode in even a grossly overmoded smooth-wall round guide.

The theoretical attenuation performance of a typical guide of the invention for the fundamental HE_{11} mode, as compared with the attenuation performance of smooth-wall guides overmoded in varying degrees for the fundamental TE_{11} mode, is shown in FIG. **5**. The corrugated guide (for which the HE_{11} attenuation coefficient per unit length is shown by the solid curve) has an inner or smaller radius of 3 centimeters and an outer or larger radius (at the groove bottoms) of 4.3 centimeters, with a groove width of 9 millimeters. The dotted curves show the TE_{11} attenuation for smooth-wall guides of the same material (brass) of diameters corresponding to the larger and smaller diameters of this corrugated guide, respectively. As will be seen from the graphs, the attenuation for the HE_{11} mode in the corrugated guide is not only drastically lower, over a wide range of frequencies, than the TE_{11} attenuation in the smooth-wall guide of the smaller diameter, which is highly overmoded at this size, but is indeed considerably lower, over a substantial frequency band at about 6 GHz, than the attenuation of a smooth-wall guide of the larger inner diameter, even though a smooth-wall guide is so grossly overmoded at such a size as to be essentially useless. The calculated attenuation coefficient solid curve of FIG. **5** is for a corrugated guide of wholly negligible tooth-width, but the losses due to finite tooth-width are found to be negligible so long as tooth-width is limited to a small fraction of groove-width, such as one-tenth.

For corrugated guides of larger diameter, the improvement in HE_{11} attenuation performance as compared with the TE_{11} attenuation performance of smooth-wall guide of the same dimensions (inner or outer) is numerically even greater than the factor of approximately 2 obtained as the improvement in attenuation coefficient as compared with smooth-wall guide of the inner or smaller diameter. However, when the ratio of smaller diameter to larger diameter is increased to greater than about 0.8, corresponding to an inner radius of approximately 1.3 wavelengths, the guide supports propagation of higher modes to which the HE_{11} mode may be readily converted.

Accordingly, the balance between attenuation of the HE_{11} mode and loss of energy to higher modes is most satisfactory with an inner radius of from approximately 0.67 to approximately 1.3 wavelengths, generally corresponding to a ratio of smaller diameter to larger diameter in the range from approximately 0.65 to approximately 0.8, or a ratio of groove depth to inner radius of from one-quarter to one-half. For the long-distance transmission of the invention, the guide may accordingly be described as being of a length exceeding a hundred times its inner diameter.

Practical design of a waveguide system of the invention for optimum operation at any given frequency is desirably performed empirically within these ranges, since optimization of performance depends upon a number of variables, including the degree to which the precision of manufacture of the waveguide approaches the theoretically ideal conditions which prevent conversion of energy to other modes, and also the bandwidth requirement for any particular application. It is found that with a ratio of smaller diameter to larger diameter of approximatley 0.7, or a groove depth approximately four-tenths the inner radius, as in the specific example discussed above, over a substantial bandwidth no modes can exist which are readily susceptible to conversion from the hybird HE_{11} mode. By contrast, a smooth-wall guide of the smaller diameter will, at these same frequencies, not only have an attenuation coefficient approximately twice as large but will in addition support a large number of higher modes including those most susceptible to conversion from the TE_{11} mode, so that the improvement in attenuation by the present invention as compared with practical TE_{11} mode transmission in smooth-wall guide is much larger than the factor of 2 shown by the above comparison.

As in the case of practical uses of circular waveguide, the corrugated waveguide transmission systems of the invention may be modified from theoretically ideal form in practical utilization. For example, to provide assurance of maintenance of polarization direction in the TE_{11} fundamental mode, much commercially manufactured waveguide departs somewhat from fully circular shape, employing a more or less elliptical cross-section. Other deviations from circular symmetry of smooth waveguide, such as internal conducting strips, etc., may be employed for the same purpose. Such deviations from circular symmetry do not otherwise greatly affect the operation of a generally circular guide and can also be employed in the present invention for similar purposes. Likewise, the exactly rectilinear cross-sectional shape of the grooves and the teeth which space them shown in the drawing may be modified with relatively little effect on performance. One example of a construction readily adapted to commercial manufacture is shown in FIG. **6** wherein the guide is fabricated of relatively thin sheet or strip, the grooves **24** and teeth **26** being formed by folding or bending of sheet material subsequently formed into a tube. The rounding of corners inherent in such a fabrication only slightly affects the operation, and even further departures from theoretical conditions can be tolerated, such as the relatively small wall undulations now employed in smooth-wall flexible waveguide earlier described.

It will be observed by those skilled in the art that the invention in its broadest aspects is capable of adaptation to waveguide shapes which deviate from circularity to such an extent that propagation occurring therein

is not identifiable as the hybird HE_{11} circular mode. It is within the contemplation of the invention to employ in corrugated guides of such non-circular shapes other hybrid modes of propagation which may produce surface currents only in a small portion of the internal conductive surface of guides of such shapes.

What is claimed is:

1. In the propagation of energy over distances greater than approximately 200 wavelengths in imperfectly-conducting metallic waveguide, the improvement for reduction of wall-loss attenuation comprising propagating the energy through generally circular corrugated waveguide of such length in the hybrid HE_{11} mode.

2. The method of claim **1** wherein the corrugated waveguide has a ratio of the inner radius to the radius in grooves forming the corrugations between approximately 0.65 and approximately 0.8 to discriminate against higher propagation modes.

3. The method of claim **1** wherein the inner radius of the waveguide is between 0.67 and 1.3 wavelengths.

4. The method of claim **1** wherein the corrugations of the guide are of a depth between 0.28 and 0.38 wavelength.

5. The method of claim **4** wherein the corrugations of the guide are formed by grooves of width between one-third and one-fifth wavelength.

6. The method of claim **5** wherein adjacent grooves are spaced by less than one-eighth the groove width.

7. The method of claim **6** wherein the ratio of the inner radius of the waveguide to the radius in the grooves forming the corrugations is between approximately 0.65 and approximately 0.8.

8. The method of claim **7** wherein said ratio is approximately 0.7.

9. A generally circular finite-conductivity metallic waveguide for low-loss hybrid HE_{11} transmission having closely spaced internal grooves of depth between one-quarter and one-half its inner radius and of a length exceeding one hundred times its inner diameter.

10. The waveguide of claim **9** wherein the spacing between adjacent grooves is less than one-eighth the width of the grooves.

* * * * *