United States Patent [19]

Brown

[11] **3,761,663**

[45] **Sept. 25, 1973**

[54] **TRIGGER SWITCH WITH SELECTIVE TWO-POSITION TRIGGER-DEPRESSION LIMITING MEANS**

[75] Inventor: **Harry W. Brown,** Big Bend, Wis.

[73] Assignee: **Cutter-Hammer, Inc.,** Milwaukee, Wis.

[22] Filed: **Dec. 8, 1971**

[21] Appl. No.: **206,046**

[52] **U.S. Cl.** **200/157**

[51] **Int. Cl.** **H01h 13/08**

[58] **Field of Search**..... 200/157; 74/531; 310/68 R, 150; 318/330

[56] **References Cited**

UNITED STATES PATENTS

3,590,193	6/1971	Frenzel	200/157
3,550,472	12/1970	Dummer	74/531
3,484,632	12/1969	Opalenik	200/157 X
3,439,248	4/1969	Winchester et al.	200/157 UX
3,575,560	4/1971	Mayer et al.	200/157

Primary Examiner—Robert K. Schaefer
Assistant Examiner—Robert A. Vanderhye
Attorney—Hugh R. Rather et al.

[57] **ABSTRACT**

A trigger switch for portable tool such as an electric drill, sabre saw or the like having a selector built into the trigger for selecting either of two stop positions to which the trigger can be depressed to obtain different motor speeds. The trigger consists of a slide portion entering within the switch frame and an external finger engaging portion partly offset either below (contour trigger) or above (bathtub trigger) the slide portion. The selector consists of a rotary knob recessed in the finger engaging portion and having an eccentric pin on the end of its shaft that extends into a stop block within the slide portion. In one rotary position, this pin holds the slidable stop block up partly out of the slide portion to abut the switch frame for a first stop position and when rotated to another rotary position the pin retracts this stop block down within the slide portion to clear the switch frame to allow a full depression of the trigger for a second stop position. Placing the trigger return spring between a bore in the offset part of the finger engaging portion and the switch base or frame reduces the overall length. Two spaced catches on the stop block engagable by a conventional lock pin correspond to the two stop positions.

6 Claims, 8 Drawing Figures

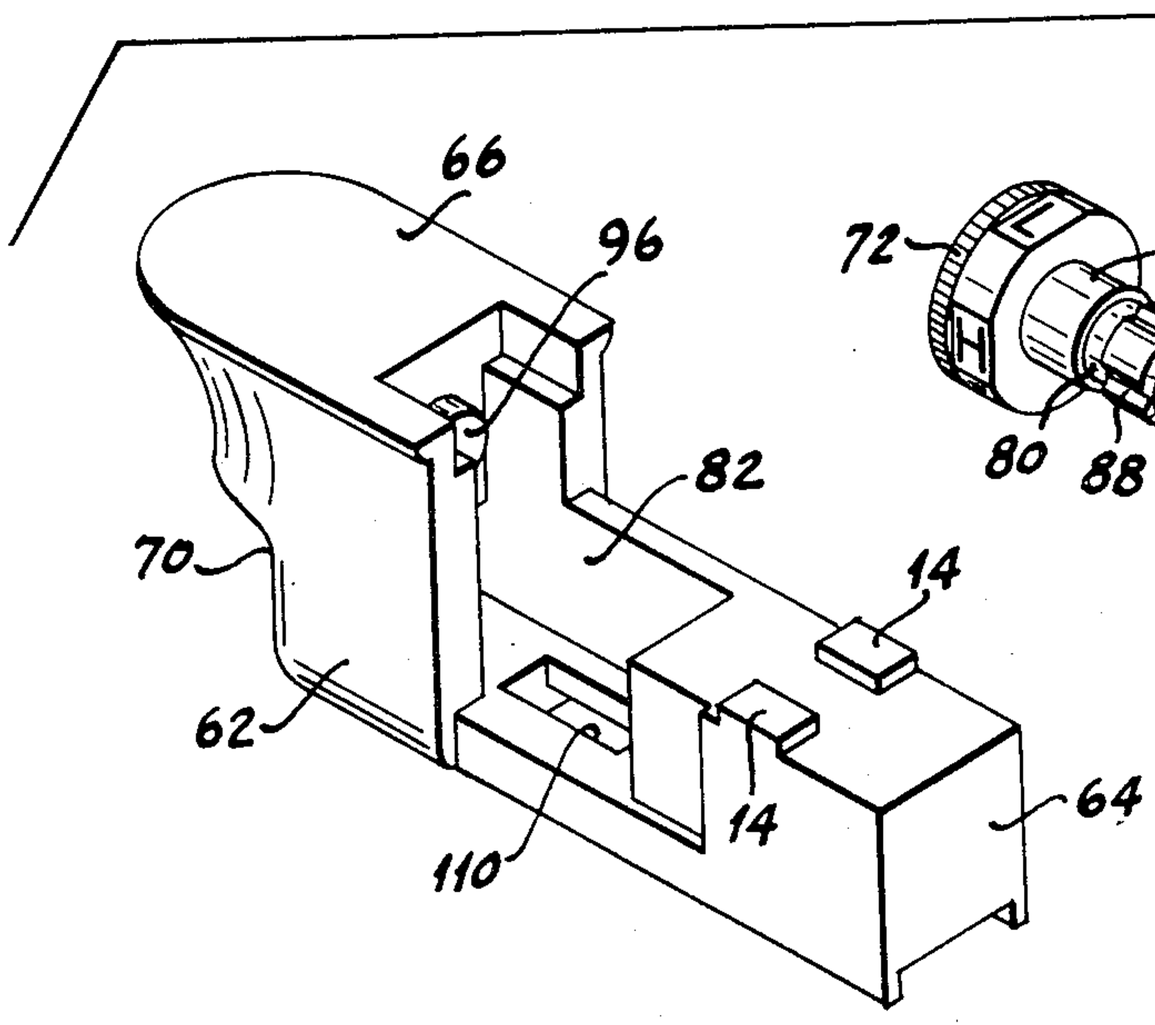



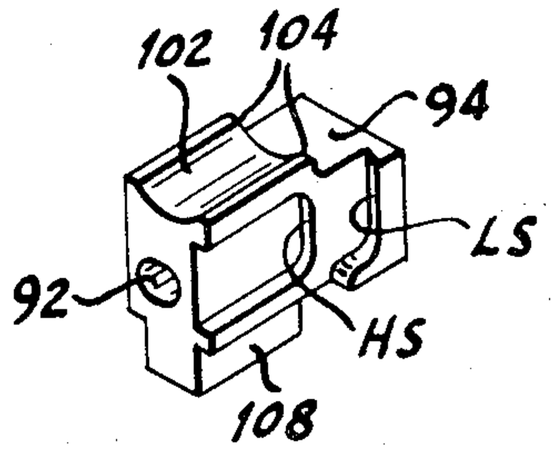

Fig. 1

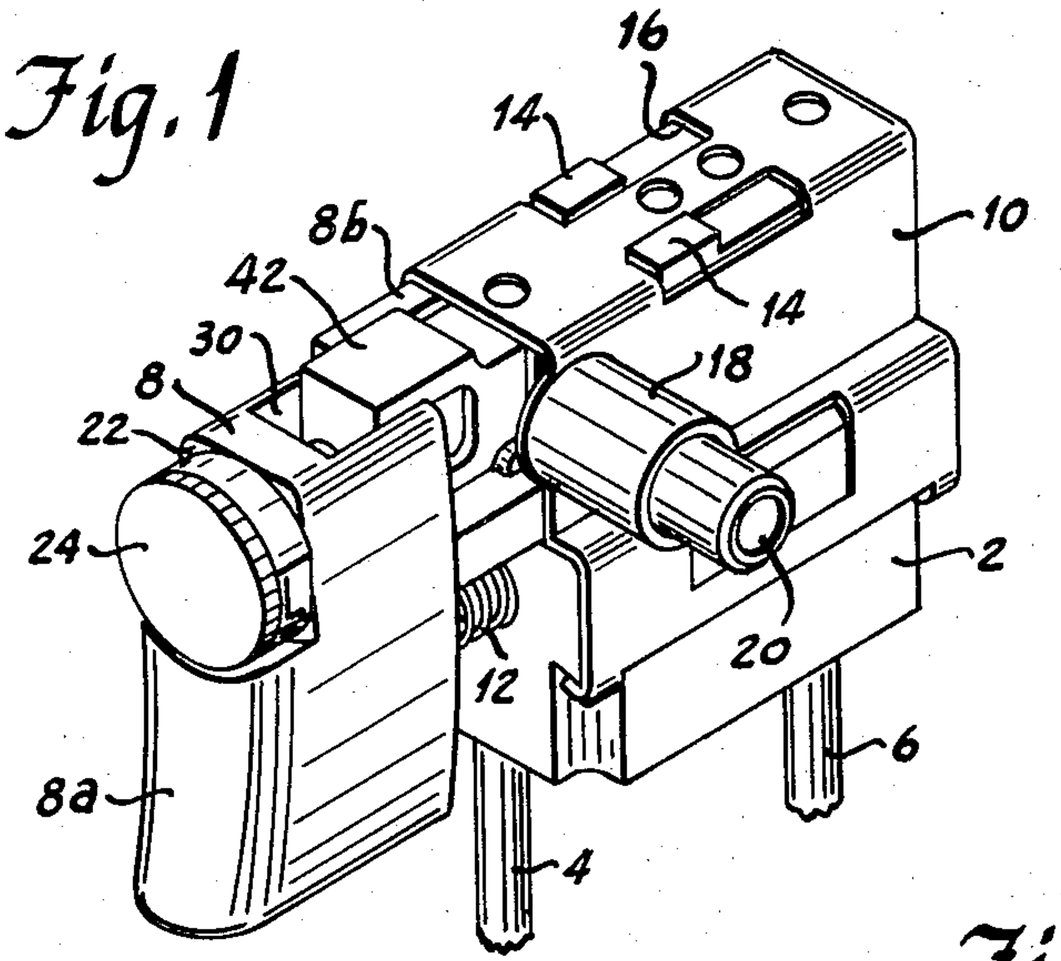

Fig. 2

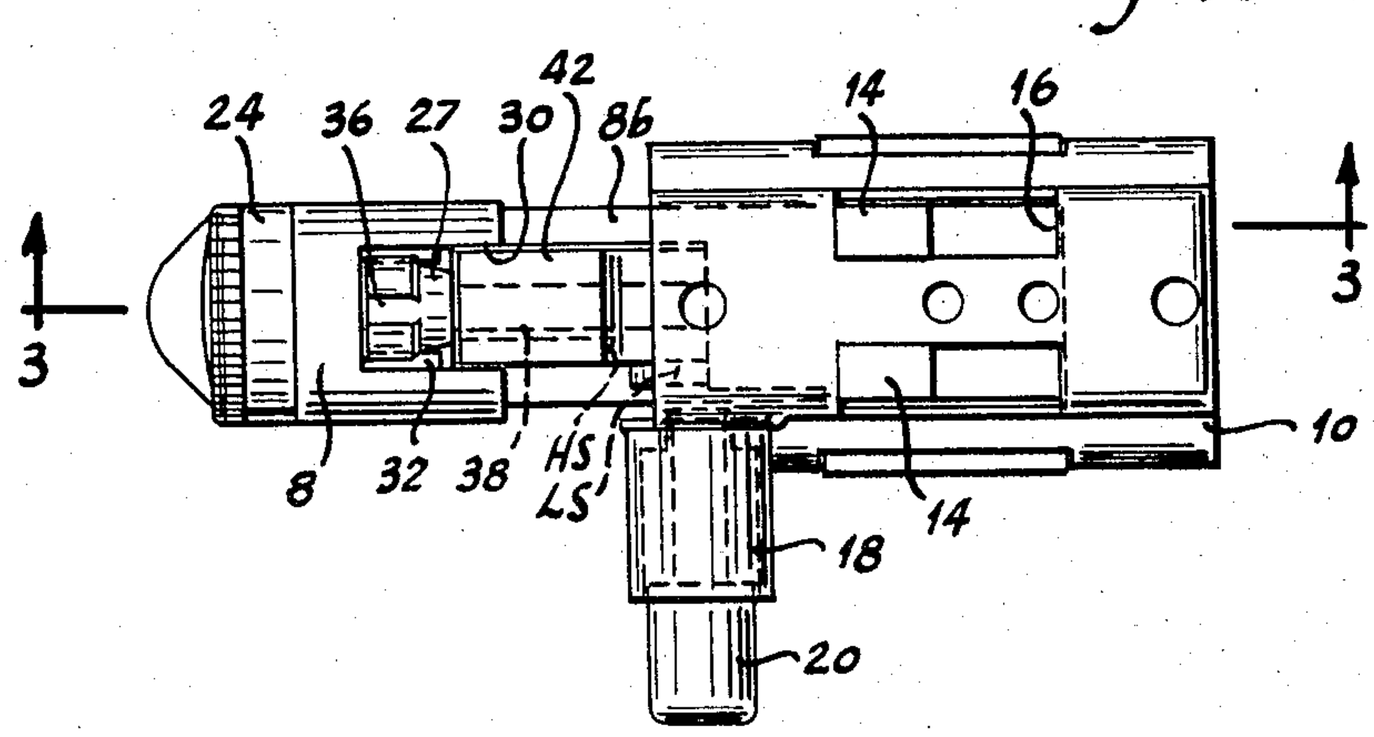

Fig. 3

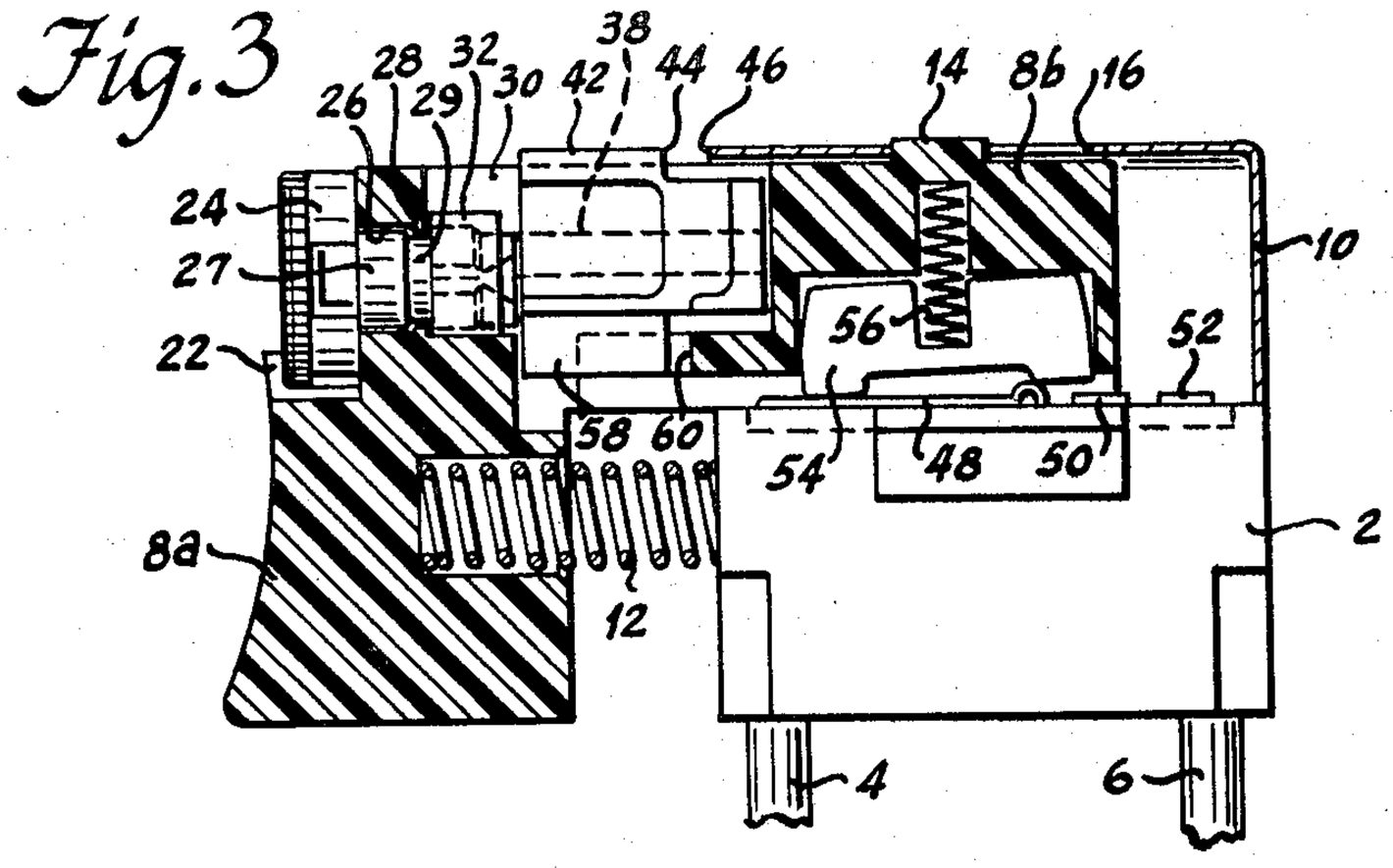

Fig. 4

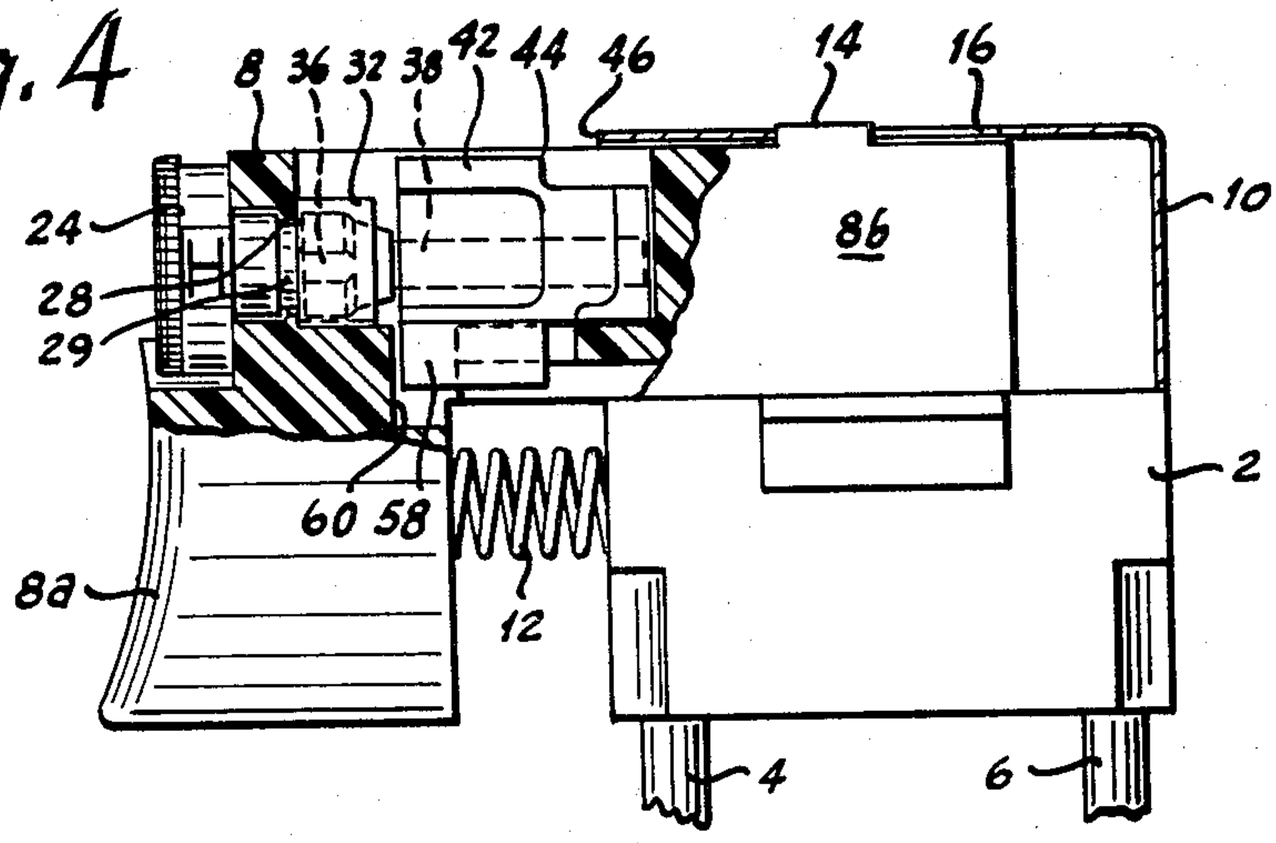

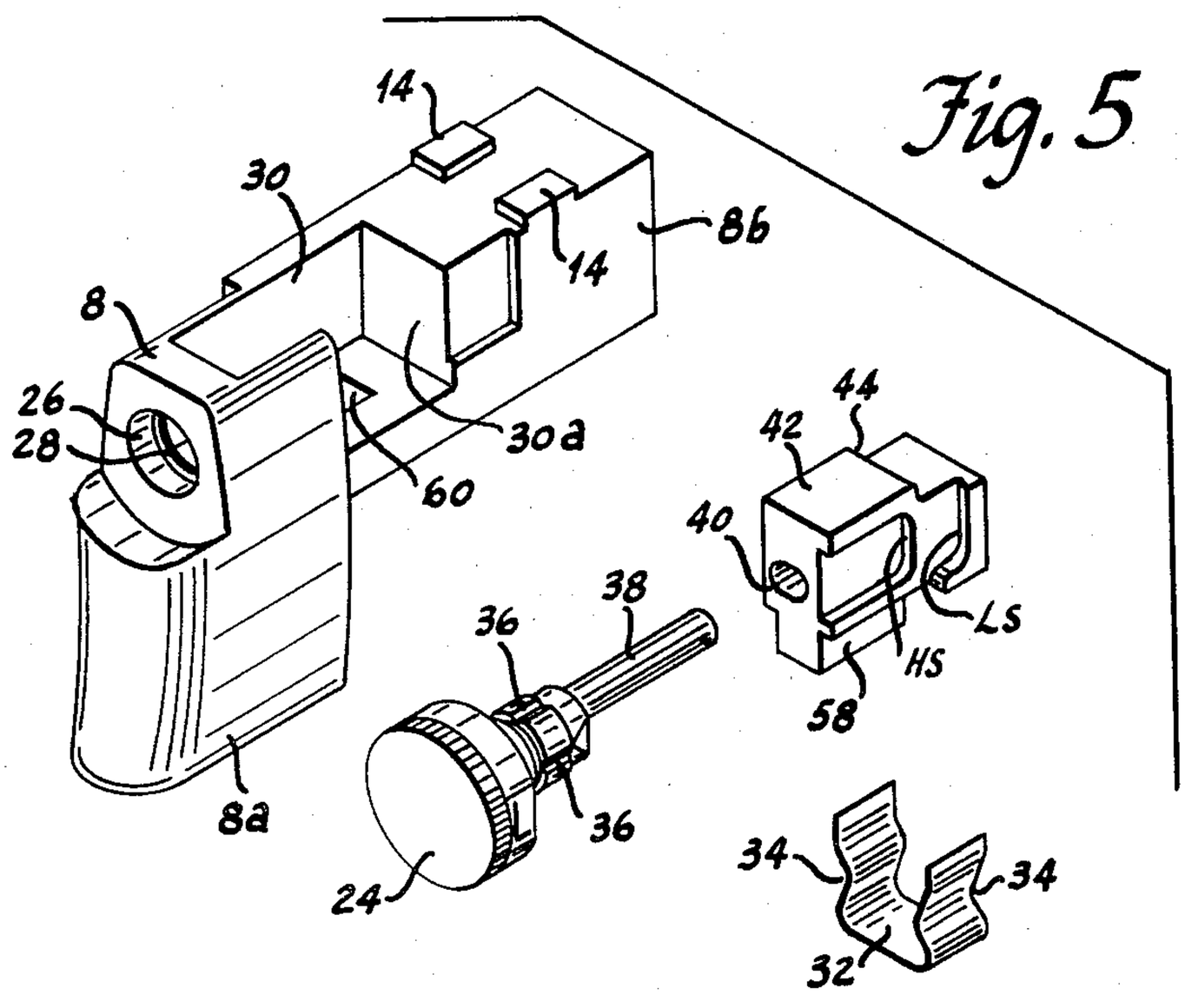

Fig. 5

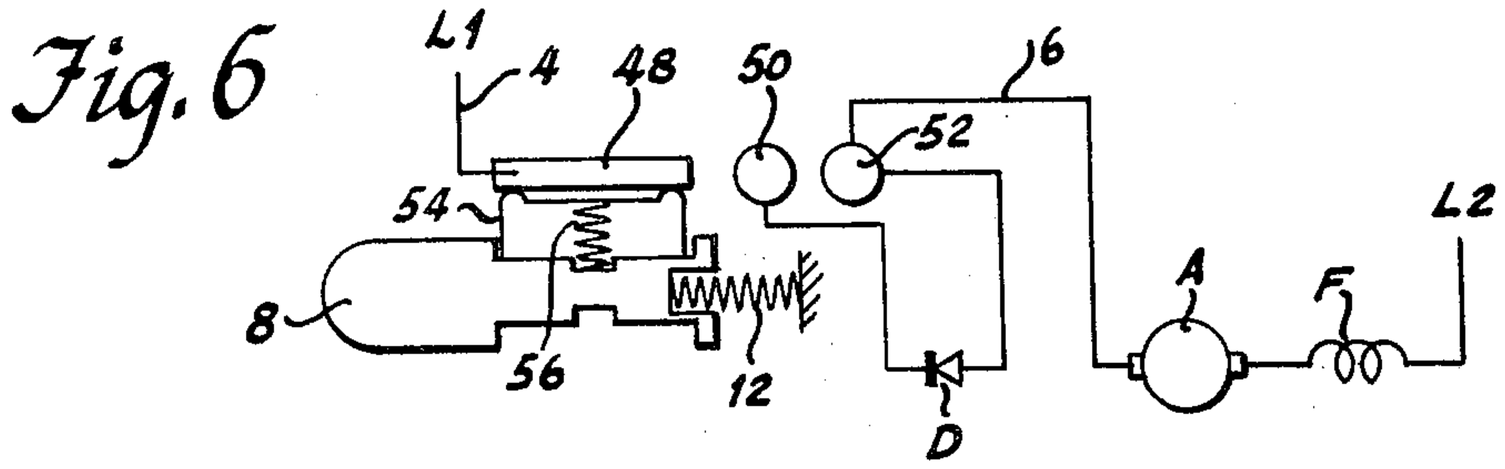

Fig. 6

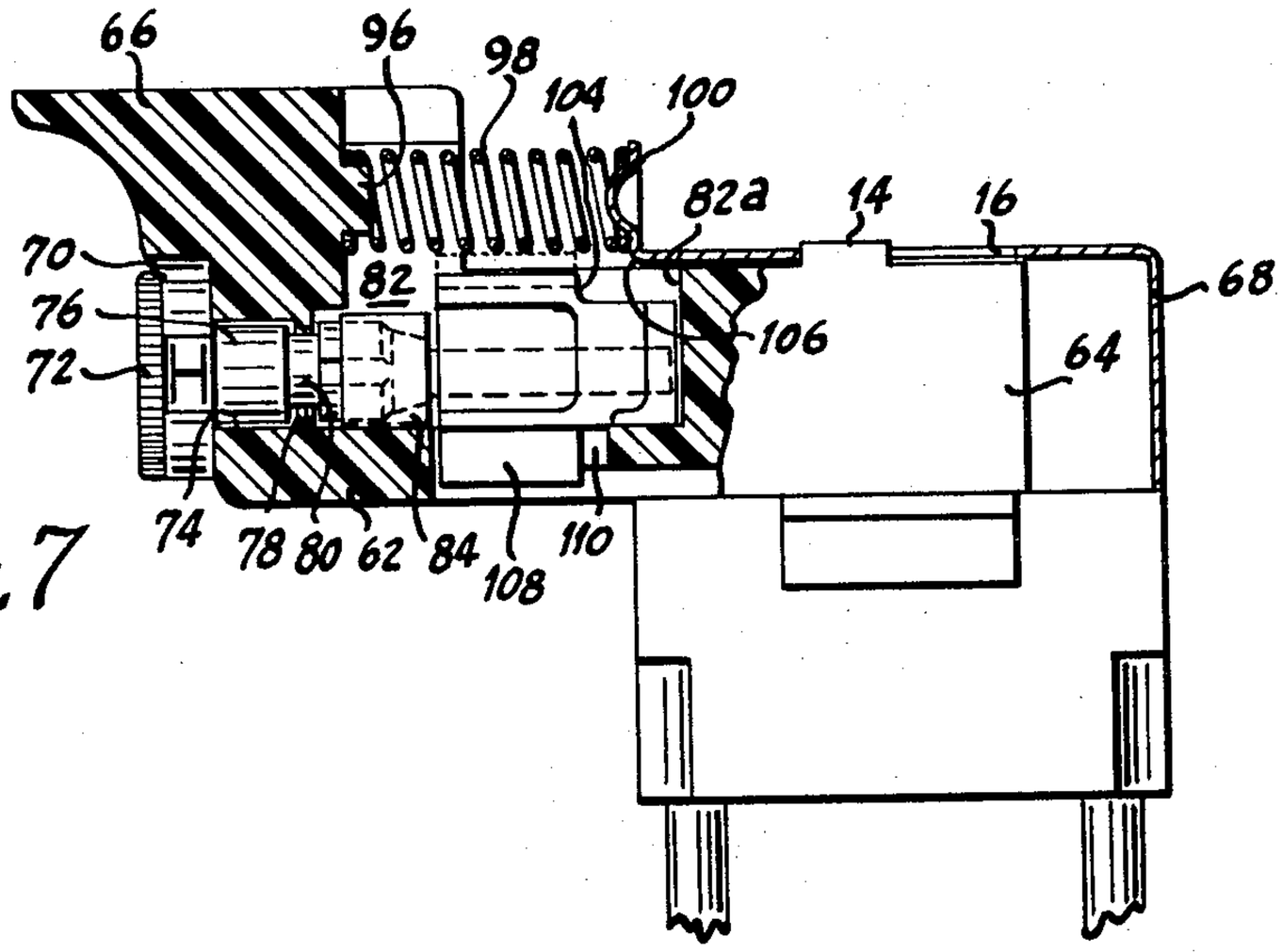
66
96
98
104
100
82a
14
16
70
82
76
72
106
64
68
74
78
80
62
84
108
110

Fig. 7

Fig. 8

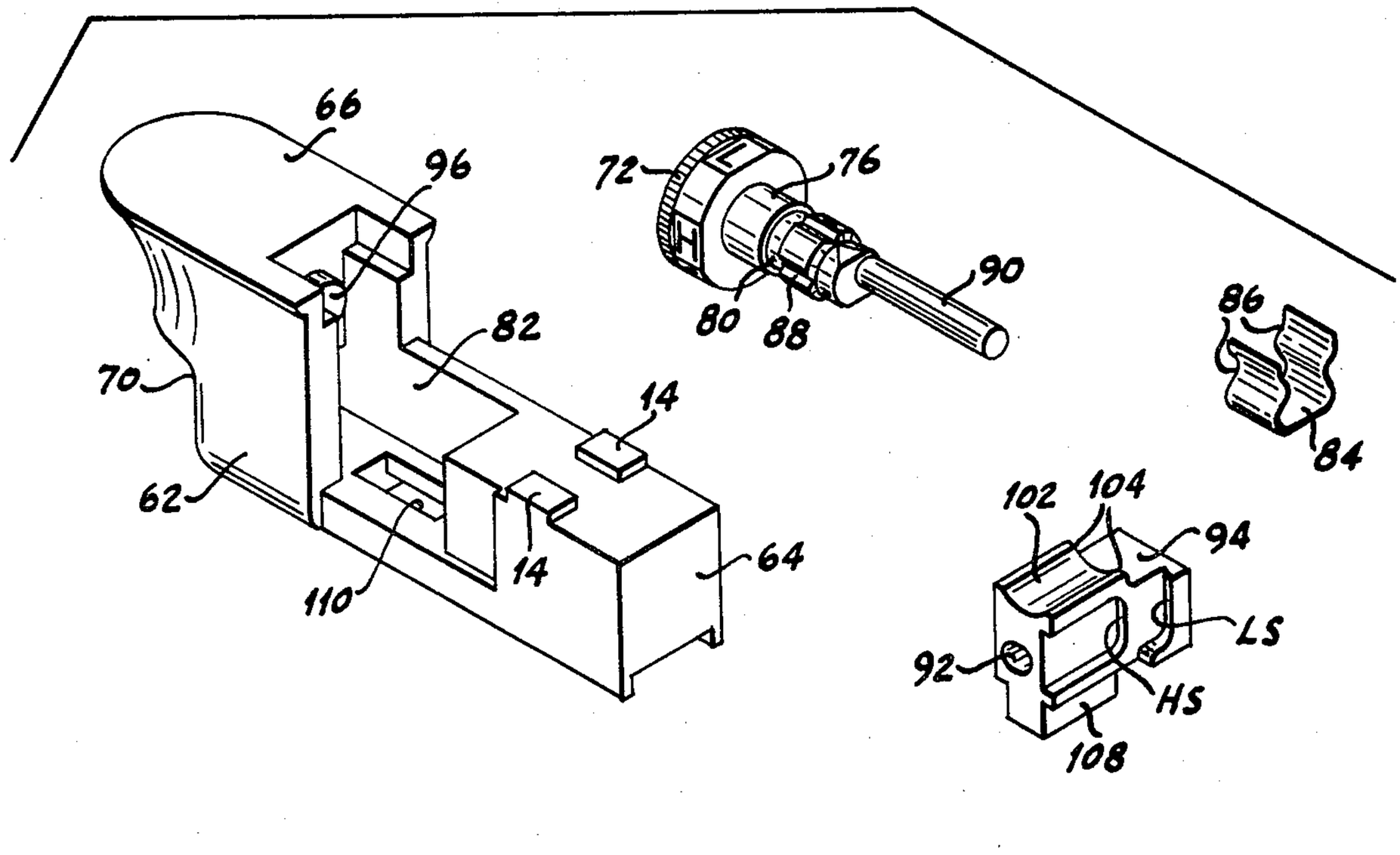
66
96
82
70
62
110
14
14
64
72
76
80
88
90
86
84
102
104
94
LS
92
HS
108

TRIGGER SWITCH WITH SELECTIVE TWO-POSITION TRIGGER-DEPRESSION LIMITING MEANS

BACKGROUND OF THE INVENTION

Selective two-position trigger switches have been known heretofore.

In one form, a rotary knob is mounted in an intermediate part of the finger engaging portion of the trigger and has a shaft extending rearwardly therethrough. The end of this shaft has a semicylindrical extension offset from the center of the shaft so that in one rotary position it will abut the switch base for limited depression to the trigger, and in another rotary position it will clear the switch base to allow further depression of the trigger.

In other forms, various pivotal or rotary stops have been mounted on the trigger or switch base to limit the trigger depression in one position and to be movable to another position to allow further depression of the trigger.

This invention relates to improvements thereover.

SUMMARY OF THE INVENTION

This invention relates to a spring biased trigger switch having a two-position selector.

An object of the invention is to provide an improved selective two-position trigger switch.

A more specific object of the invention is to provide a linearly slidable trigger with an improved settable stop structure affording selection of either of two stop positions for depression of the trigger, the trigger depression being stopped against the switch frame.

Another specific object of the invention is to provide a trigger switch with an improved two-position trigger stop means allowing placing of the trigger return spring between a recess in the trigger and the switch base to afford a shorter overall length.

Another specific object of the invention is to provide an improved two-position trigger stop having substantial strength to resist excessive force that may be applied to the trigger.

Other objects and advantages of the invention will hereinafter appear.

BRIEF DESCRIPTION OF THE DRAWINGS

FIG. **1** is an enlarged isometric view of a selective two-position trigger switch having the selective stop block mounted in a "contour" trigger:

FIG. **2** is a top view of the trigger switch of FIG. **1**;

FIG. **3** is a cross-sectional view taken along line **3—3** of FIG. **2** showing the stop block in its upper position;

FIG. **4** is a left side view of the trigger switch of FIGS. **1–3** partly in section to show the stop block in the lower position;

FIG. **5** is an exploded isometric view of the trigger and selector mechanism thereof; and

FIG. **6** is a schematic circuit diagram showing use of the trigger switch of FIGS. **1–5** for universal motor speed control.

FIG. **7** is a cross-sectional view of a selective two-position trigger switch having the selective stop block mounted in a "bathtub" trigger; and

FIG. **8** is an exploded isometric view of the trigger and selector mechanism thereof.

DESCRIPTION OF THE PREFERRED EMBODIMENT

Referring to FIG. **1**, there is shown a selective two-position trigger switch construction in accordance with the invention. As shown therein, the switch is provided with an insulating base **2** having electrical conductors **4** and **6** extending out through holes in the bottom thereof for connection to an external circuit and power supply as shown in FIG. **6**. This insulating base houses the switch contacts and speed control elements and the like constituting the functional system that is controlled by the trigger. This trigger switch also comprises a trigger **8** that may be depressed by the finger of the user when it is in use. A frame **10** restricts the trigger to the top of the base for linear sliding movement thereon. A helical compression spring **12** biases the trigger forwardly and returns it to its off position when released after having been depressed. As shown in FIG. **3**, the forward end of this return spring is set within a round bore in the trigger and the rear end thereof is retained in a shallow annular groove in the front wall of the base. When the operator pulls on the trigger, this return spring can be compressed almost entirely within the bore in the trigger, thus affording a trigger switch of minimum length.

The trigger is provided with a pair of short projections **14** that extend up through respective elongated apertures **16** in the upper part of the frame to provide limits for opposite directions of the trigger movement.

The frame **10** is provided with a bushing **18** retaining a spring biased lock pin **20** for locking the trigger in either of its two depressed positions as hereinafter more fully described. While the frame is preferably made of metal such as sheet steel, it alternatively could be made of plastic material such as nylon or the like with a snap fit onto the base.

As shown in FIG. **2** and **3**, the trigger is of the "contour" type, meaning the upper surface of its finger engaging portion **8***a* is substantially coextensive with the upper surface of its slide portion **8***b* and that its finger-engaging portion is offset down parallel to the front wall of the base substantially to the bottom plane of the base.

The trigger is provided with a notch **22** at its upper forward portion for receiving a knob **24.** A round hole **26** extends rearwardly from this notch for journaling the shaft **27** that is integral with the knob. This hole **26** is provided a resilient plastic constriction lip **28** that snaps into an annular groove **29** in the shaft to hold the shaft in place but allows free rotation thereof. This round hole extends into an open top cavity **30** in the slide portion **8***b* of the trigger. The cavity is provided with configuration at its forward end that is suitable for retaining a generally U-shaped detent spring **32** shown in FIG. **5.** This spring is a leaf spring having a constriction about half-way up provided by inward bends **34** on its upstanding sides. These bends enter grooves **36** in shaft **27** to resiliently hold the knob in one or the other of its angular positions in which it is set. Four grooves **36** are provided in the shaft spaced 90° apart so that opposite notches of each pair are effective in each position of the knob.

Shaft **27** is provided at its end with an eccentric pin **38** integrally formed therewith that extends into a laterally oblong hole **40** in stop block **42.** Rotation of the knob 90° causes this pin to move up from 9 o'clock or

3 o'clock position to the 12 o'clock position to lift the stop block from its lower, high-speed position H shown in FIG. 4 to its upper, low-speed position L shown in FIGS. 1–3 and vice versa.

In its upper position shown in FIG. 3, rear shoulder 44 of the stop block will abut forward edge 46 of the switch frame to prevent further depression of the trigger. In its lower position shown in FIG. 4, this rear shoulder of the stop block passes under the forward edge of the switch frame to allow full depression of the trigger until projections 14 stop against the rear end of apertures 16.

Stop block 42 is provided with two catches spaced from one another on the left side thereof including a low-speed catch LS and a high speed catch HS as shown in FIG. 5. It will be apparent that when the trigger in FIG. 3 is depressed, lock pin 20 may be depressed into low-speed catch LS to lock the trigger at low-speed. When the trigger in FIG. 4 is depressed, lock pin 20 may be depressed into high-speed catch HS to lock the trigger at high speed. In each case, the lock pin is held in momentarily while the trigger is released to cause locking to take place. These catches are undercut at a small angle as shown in FIG. 2 for trapping the flanged end of the lock pin therein. To release the lock, the trigger is depressed slightly to allow the return spring within bushing 18 to retract the lock pin clear of the catch. Release of the trigger then allows spring 12 to return to its off position.

While various switching arrangements are possible, a preferred two-speed portable electric tool motor control system is shown in FIG. 6. Power lines L1 and L2 are connected to an A.C. source. Line L1 is connected through conductor 4 (also shown in FIG. 1) to a stationary contact strip 48. Stationary contacts 50 and 52 are successively spaced from the right-hand end of contact strip 48. A bridging contact 54 is retained in a recess in the trigger and biased by a helical compression spring 56 against the stationary contact strip as also shown in FIG. 3. Power line L2 is connected through the field winding F and armature winding A of a universal motor, and conductor 6 to stationary contact 52. The latter is connected through a half-wave rectifying diode D to stationary contact 50.

As will be apparent in FIG. 6, depression of the trigger to its first stopping position wherein stop block 42 abuts the switch frame causes contact 54 to bridge contacts 48 and 50. As a result, the motor is energized with half-wave rectified current through diode D for low-speed operation. Depression of the trigger all the way wherein stop block 42 passes under the switch frame causes contact 54 to bridge contacts 48 and 52 to energize the motor with full-wave current directly across the supply lines for high-speed operation.

As shown in FIG. 3, stop block 42 is held in cavity 30 in the slide portion 8*b* of the trigger by pin 38 of the selector knob passing therethrough. The stop block is also provided with a narrow lower runner 58 that is guided in an elongated slot 60 in the bottom of cavity 30.

When the trigger is depressed and rear shoulder 44 of the stop block abuts forward edge 46 of the switch frame, runner 58 will abut the forward end of slot 60 to keep the stop block from moving and thereby to arrest trigger movement and provide a solid and strong trigger stop. Any tendency of the stop block to tip over will be prevented by the flat rear end of the stop block being confined against front wall 30*a* (FIG. 5) of cavity 30 and pin 38 extending through the stop block.

While a two-position stop block has been shown, it will be apparent that the invention could readily provide a three-position stop by providing two spaced abutment shoulders on the stop block; one of which be effective in the 12 o'clock position of eccentric pin 38 and the other of which would be effective in the 9 o'clock or 3 o'clock position thereof for intermediate and low-speed, respectively, whereas full speed would be effective in the 6 o'clock position of such eccentric pin.

FIGS. 7 and 8 show application of the invention to a "bathtub" trigger 62. As shown therein, this trigger has a similar slide portion 64 with the finger-engaging portion 66 being offset partly upwardly therefrom rather than downwardly as in the case of the contour trigger hereinbefore described.

This trigger 62 is provided with a similar pair of short projections 14 that extend up through respective elongated apertures 16 in the upper part of frame 68 to provide limits for opposite directions of trigger movement.

This trigger is provided with a notch 70 at its lower forward portion for receiving a knob 72. A round hole 74 extends rearwardly from this notch for journaling shaft 76 that is molded integral with the knob. Hole 74 is provided at its rear end with a resilient plastic constriction lip 78 that snaps into an annular groove 80 in the shaft to retain the shaft rotatably in place. This hole for the shaft extends into an open top cavity 82 in slide portion 64 of the trigger. This cavity extends at its forward end into the offset finger engaging portion of the trigger and is provided at its bottom with a configuration that is suitable for confining a generally U-shaped detent leaf spring 84. This spring has a constriction about half-way up provided by inward bends forming horizontal ribs 86 on its upstanding arms. These ribs enter grooves 88 in shaft 76 to resiliently hold the knob in one or the other of its angular positions in which it is set. Four grooves 88 are provided spaced 90° apart so that opposite grooves of each pair are effective in each position of the knob.

Shaft 76 is provided at its end with an eccentric pin 90, mostly clearly shown in FIG. 8, integrally molded therewith that extends through a laterally oblong hole 92 in a stop block 94. Rotation of the knob through an angle of 90° causes this pin to move up from a 9 o'clock or 3 o'clock level to the 12 o'clock level to lift the stop block from its lower, high-speed position H shown in FIG. 7 to its upper, low-speed position L and vice versa.

As shown in FIG. 7, the front wall of cavity 82 in the finger-engaging offset portion of the trigger is provided with an integrally molded short projection 96 for retaining the forward end of the trigger return, helical spring 98 in place. The rear end of this spring is held in place against an upstanding tab 100 integrally formed on the switch frame 68. This tab is formed with a forward bead entering the rear end of spring 98 to keep it from slipping off the tab. To provide clearance for spring 98, stop block 94 is provided with a trough 102 along its upper surface.

In its upper position, rear shoulder 104 at the opposite sides of trough 102 of the stop block will abut the forward edge 106 at the bottom of the tab 100 of the switch frame to prevent further depression of the trigger. In its lower position, this rear shoulder of the stop block will pass under the forward edge of the switch frame to allow full depression of the trigger until pro-

jections **14** stop against the rear ends of apertures **16.**

Stop block **94** is provided with two locking catches spaced from one another on the left side thereof including a low-speed catch LS and a high-speed catch HS as shown in FIG. **8** similar to and for the same purpose as the like catches in FIG. **5.**

As shown in FIGS. **7** and **8,** stop block **94** is held in cavity **82** in the slide portion **64** of the trigger by pin **90** of the selector knob projecting thereinto. This stop block is also provided with a narrow lower runner **108** that is guided in an elongated slot **110** in the bottom of cavity **82.**

When the trigger is depressed and rear shoulder **104** of the stop block abuts forward edge **106** of the switch frame, runner **108** will abut the forward end of slot **110** to keep the stop block from moving thereby to arrest trigger movement and provide a solid strong trigger stop. Any tendency of the stop block to tip over will be prevented by the flat rear end of the stop block being confined against front wall **82***a* of cavity **82** and pin **90** extending through the stop block.

While the apparatus hereinbefore described is effectively adapted to fulfill the objects stated, it is to be understood that the invention is not intended to be confined to the particular preferred embodiments of selective two-position trigger switches disclosed, inasmuch as they are susceptible of various modifications without departing from the scope of the appended claims.

I claim:

1. A selective plural-position trigger switch comprising:

a trigger having a linearly slidable portion and a finger engaging portion partly offset to one side of said linearly slidable portion;

a switch housing including an insulating base and a frame secured to said base and including means restricting said linearly slidable portion of said trigger therebetween for limited movement between off and full-on positions;

a recess in said finger-engaging offset portion of said trigger and trigger-return spring between said recess and said housing normally biasing said trigger away from the latter and allowing depression of said trigger against said return spring to actuate the switch;

and a plural-position selector means for selecting a different depth of trigger depression in each position thereof for performing a plurality of switching operations comprising;

a cavity substantially entirely in said linearly slidable portion of said trigger opening to one side thereof;

a stop block in said cavity and means guiding said stop block for movement from within said cavity to a position partly out of said cavity;

and a selector member having a shaft extending through said finger engaging portion into said cavity and having a coupling portion extending to said stop block whereby actuation of said selector member moves said stop block partly out of said cavity to abut said switch housing and to limit depression of said trigger to a first stop position, and actuation of said selector member reversely moves said stop block into said cavity to clear said switch housing and to allow full depression of said trigger.

2. The invention defined in claim **1,** wherein said selector member comprises:

a knob on said shaft and said shaft having an eccentric pin on the end of said shaft extending into said stop block whereby manual rotation of said knob causes said eccentric pin to move said stop block.

3. The invention defined in claim **2,** wherein:

said stop block comprises a laterally oblong hole into which said eccentric pin extends whereby rotation of said shaft causes said eccentric pin to raise or lower said stop block,

4. The invention defined in claim **2,** wherein said plural-position selector means also comprises:

detent means for resiliently holding said knob in its selective positions comprising:

pairs of grooves in said shaft with the grooves of each pair being on opposite sides of said shaft;

and a generally U-shaped leaf spring confined in said cavity and having a hump formed on each of the two arms thereof engaging the grooves of a pair thereof in each position of said knob.

5. The invention defined in claim **1,** wherein:

said trigger is a "contour" trigger having its offset finger-engaging portion extending down from said linearly slidable portion in spaced parallel relation to the front wall of said base;

said recess is in said downwardly extending portion so that said trigger-return spring is between said recess and said base;

and said stop block when moved partly out of said cavity abuts the front edge of said frame.

6. The invention defined in claim **1,** wherein: said trigger is a "bathtub" trigger having its offset finger-engaging portion extending up from said linearly slidable portion above the upper surface of the switch frame;

said recess is in said upwardly extending portion so that said trigger-return spring is between said recess and an upstanding tab on said frame;

and said stop block when moved partly out of said cavity abuts the front of said frame at said tab.

* * * * *