United States Patent [19]

Saito

[11] **3,734,026**

[45] **May 22, 1973**

[54] COASTER VEHICLE AND TRACKWAY

[75] Inventor: **Makoto Saito,** Tokyo, Japan

[73] Assignee: **Tomy Company, Inc.,** Tokyo, Japan

[22] Filed: **June 17, 1971**

[21] Appl. No.: **154,067**

[52] **U.S. Cl.** .....**104/167,** 238/10 F

[51] **Int. Cl.** **B61b 13/00,** A63h 18/04

[58] **Field of Search**.....104/167, 60; 238/10 E, 10 F

[56] **References Cited**

UNITED STATES PATENTS

1,779,148	10/1930	Savnier	104/167
3,583,322	6/1971	Vykukal	238/1
3,411,783	11/1968	Montagna	238/10 F
3,316,401	4/1967	Cramer	238/10 F
3,605,631	9/1971	See et al.	104/167

FOREIGN PATENTS OR APPLICATIONS

27,682	12/1911	Great Britain	104/167

Primary Examiner—Gerald M. Forlenza
Assistant Examiner—Richard A. Bertsch
Attorney—Edward S. Irons et al.

[57] **ABSTRACT**

An amusement device featuring a continuous trackway having a first end of lower elevation than a second end, a lift mechanism interposed between and connected to the ends of the trackway and including an elongated helical screw powered by a motor and extending upwardly from the first end of the trackway to the second end thereof and a coaster vehicle arranged to travel along the trackway and up the lift mechanism as the rotating screw continuously contacts one or more hooks depending from the vehicle urging the vehicle upwardly along the lift mechanism.

9 Claims, 10 Drawing Figures

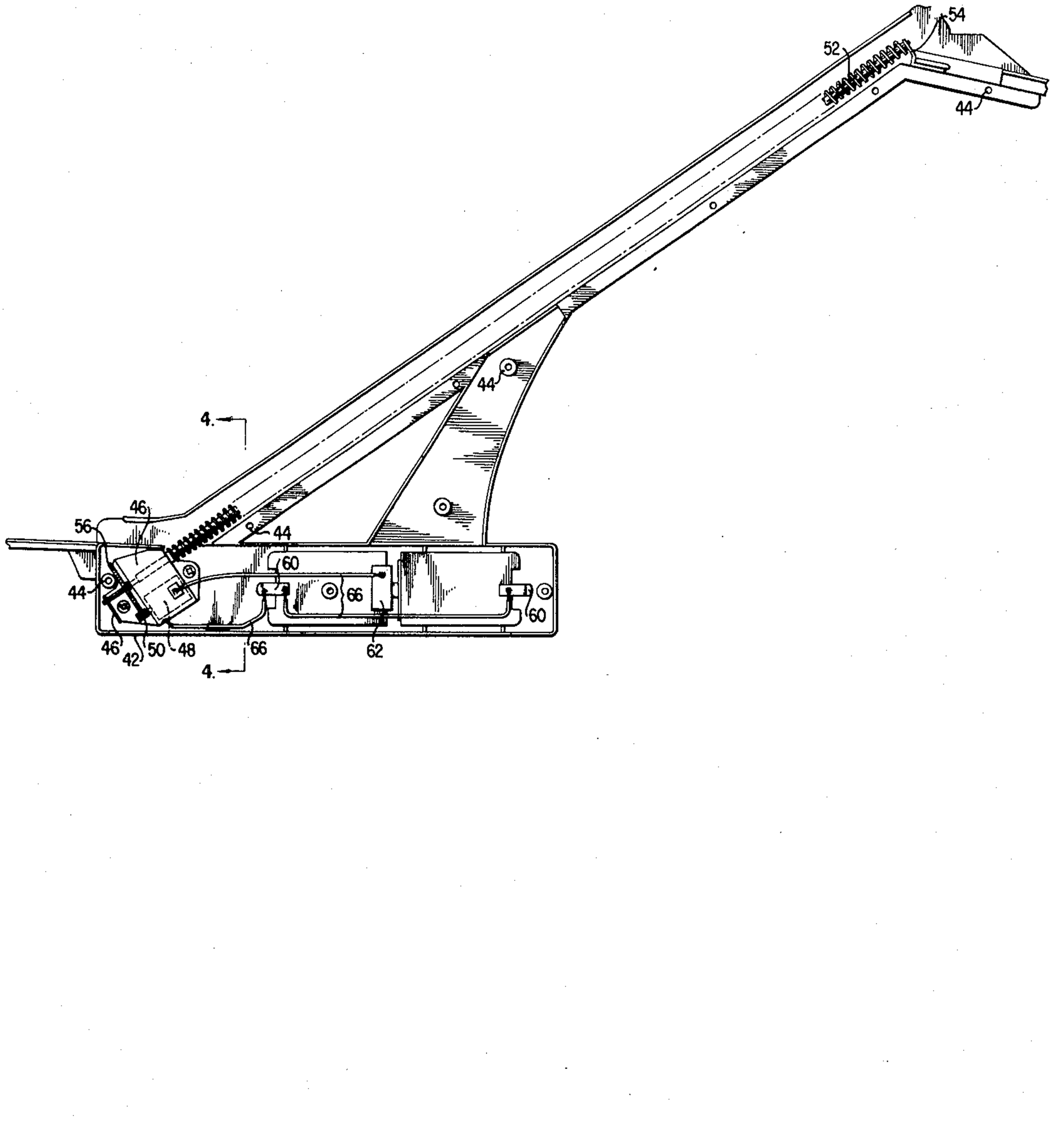

PATENTED MAY 22 1973

3,734,026

SHEET 1 OF 3

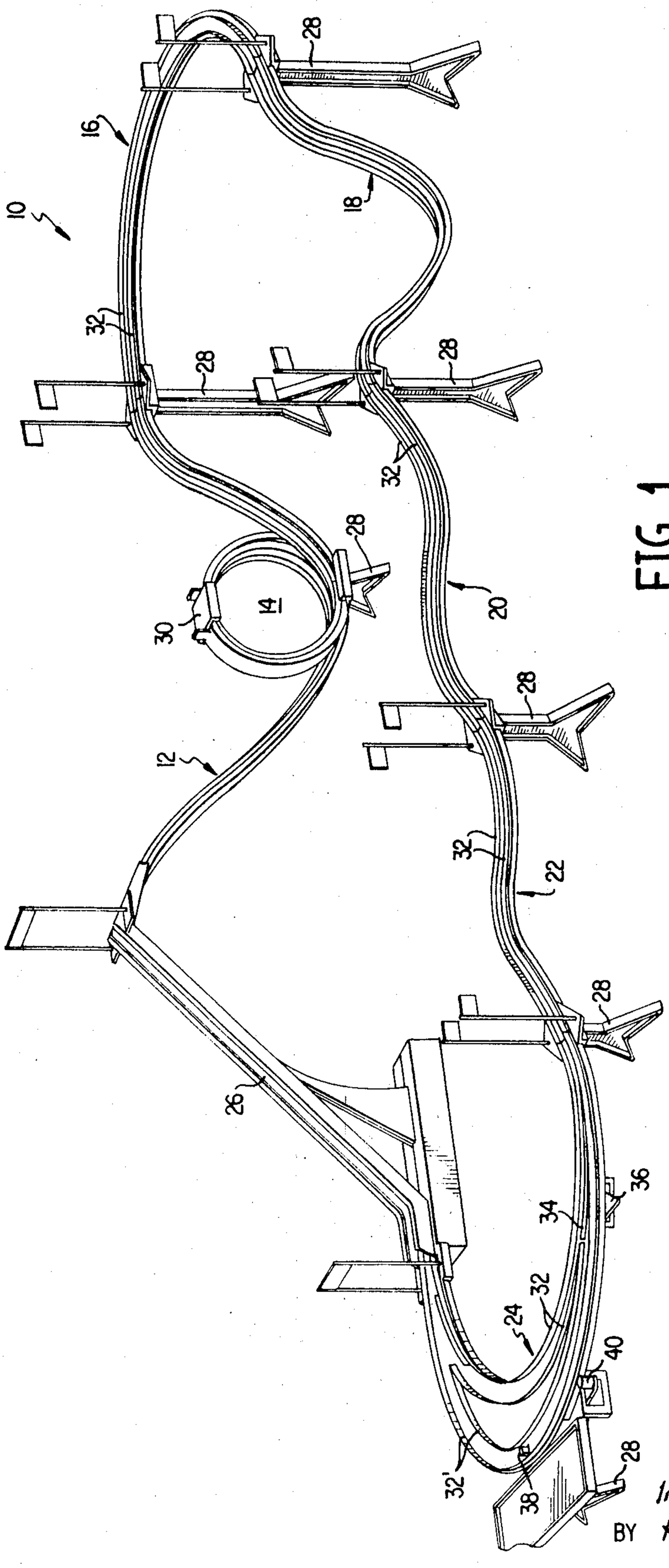

FIG. 1

INVENTOR
MAKOTO SAITO

BY Irons, Sears, Staas, Halsey & Santorelli
ATTORNEYS

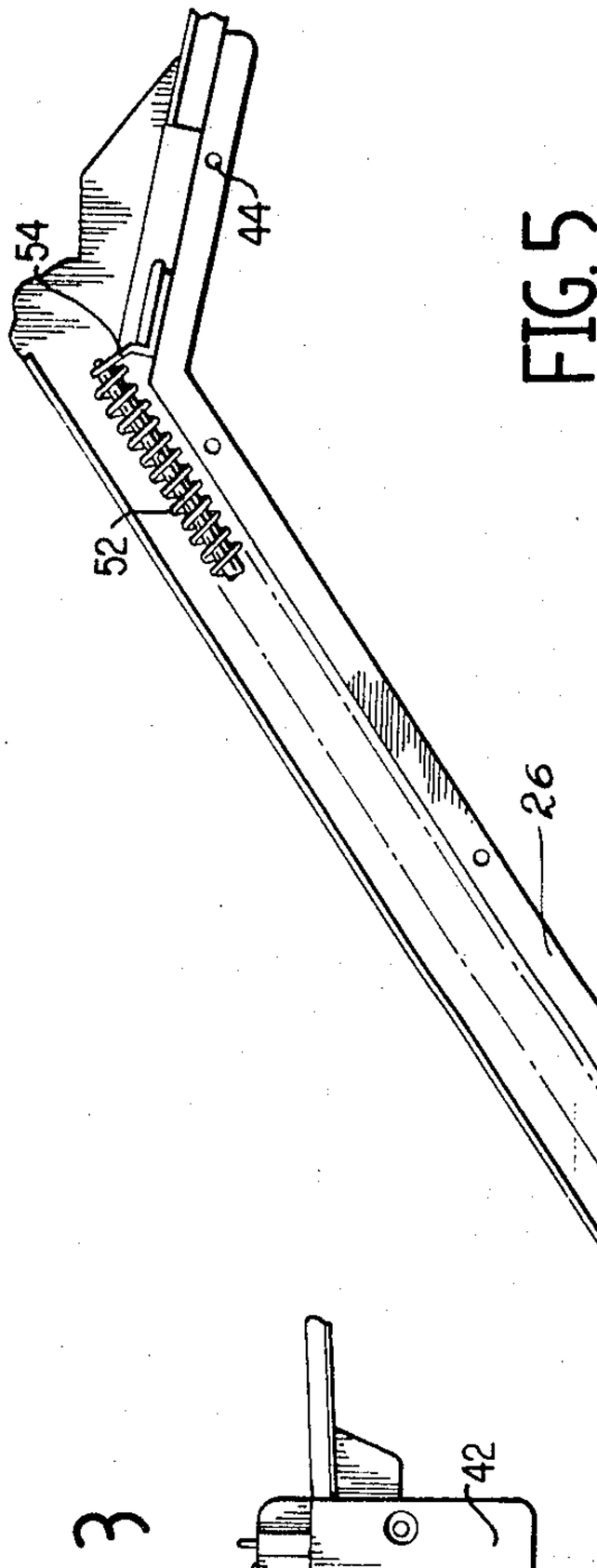

FIG. 3

FIG. 2

FIG. 5

FIG. 4

FIG. 6

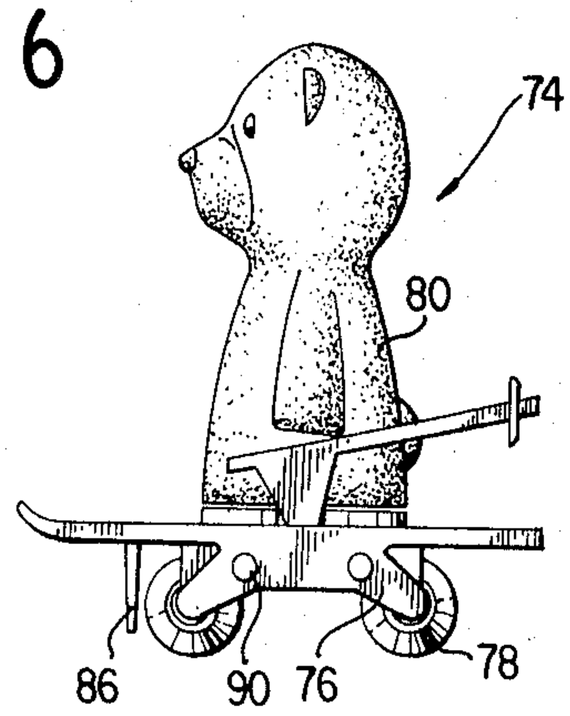

FIG. 7

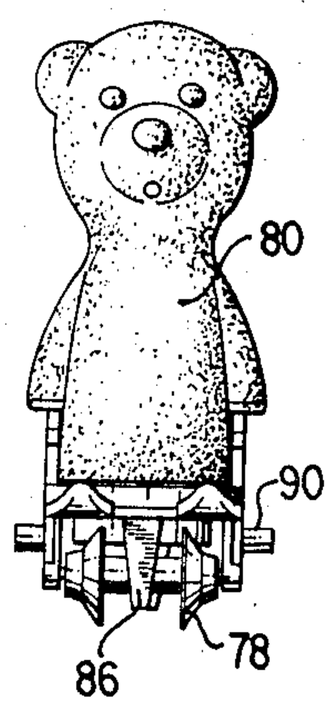

FIG. 8

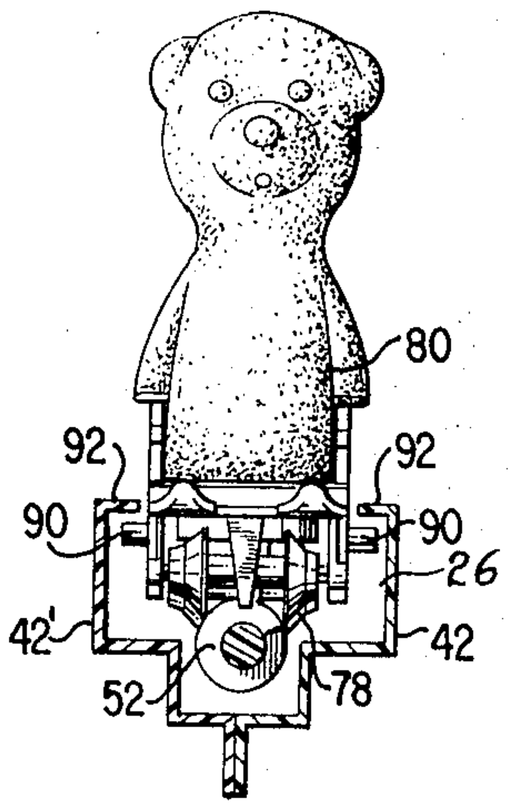

FIG. 9

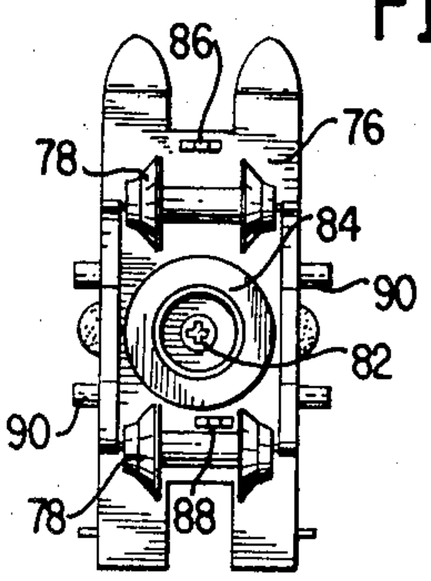

FIG. 10

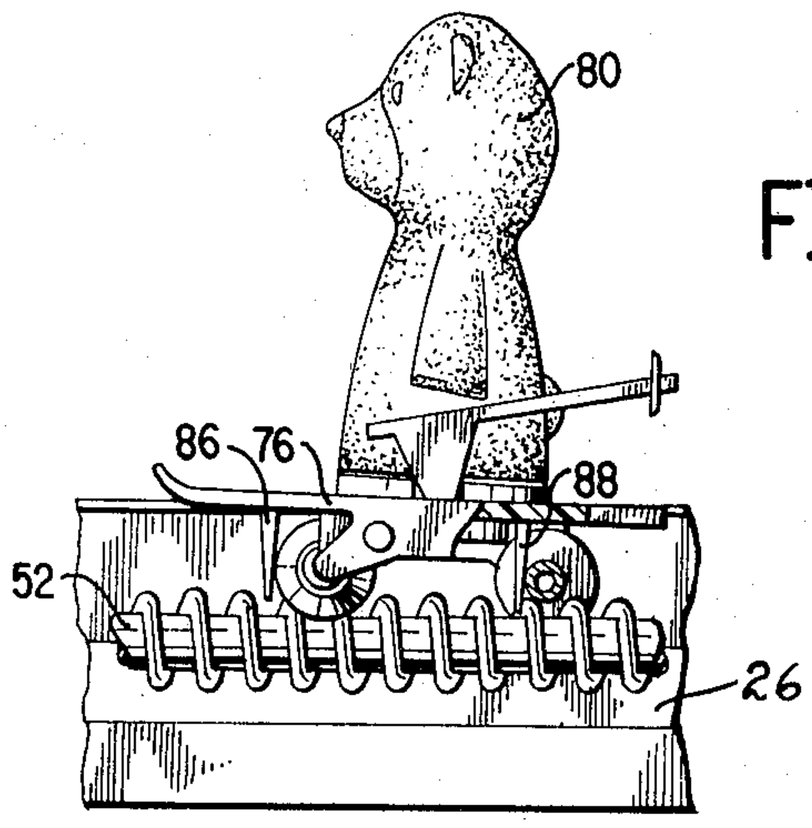

COASTER VEHICLE AND TRACKWAY

BACKGROUND OF THE INVENTION

The present invention relates to an amusement device simulating skiing wherein one or more coaster vehicles run along a multi-configured trackway. Each skier coaster vehicle is automatically raised to the highest position of the trackway by a lift mechanism which simulates a ski lift. To the delight of the child the skier coaster vehicle thereafter negotiates a series of curves in the trackway. The design of the vehicle, the trackway curves and inertia forces cooperate throughout the downward movement of the skier coaster vehicle to enable the skier to perform loop-to-loop somersaults, jumps and zig-zag patterns. Finally, the skier coaster vehicle enters the lift mechanism and is automatically lifted to the top of the slope to begin another run. A switching station is employed enabling selected skier coaster vehicles to bypass the continuous trackway until it is desired to resume skiing.

SUMMARY OF THE INVENTION

While coaster vehicles for use on continuous trackways are old in the art, the present invention increases the variety of stunts capable of being performed by the coaster vehicle along the continuous trackway while providing an automatic system for raising the skier coaster vehicle from its lowest point on the trackway to its highest point so as to begin a new run.

BRIEF DESCRIPTION OF THE DRAWINGS

FIG. **1** is a perspective view illustrating the continuous trackway of the present invention;

FIG. **2** is a side elevational view of the lift mechanism with one side of its casing removed so as to illustrate the mechanism for rotating the continuous elongated helical screw which advances and lifts the coaster vehicle upwardly to the highest position of the trackway;

FIG. **3** is a side elevational view of a portion of the lift mechanism illustrating the battery housing and switch for energizing the motor which rotates the screw;

FIG. **4** is a sectional view taken along line **4—4** of FIG. **2** illustrating the structural relationship of the motor and helical screw to the housing of the lift mechanism;

FIG. **5** is a perspective view of a portion of the lift mechanism illustrating how the switch completes the circuit for energizing the motor which rotates the helical screw;

FIG. **6** is a side elevational view of the coaster vehicle simulating a skier;

FIG. **7** is a front elevational view of the coaster vehicle;

FIG. **8** is a front elevational view of the coaster vehicle moving upwardly along the lift mechanism shown in cross section illustrating the structural relationship and interaction between the rotating screw and the front, depending hook of the coaster vehicle;

FIG. **9** is a bottom view of the coaster vehicle illustrating the front and rear hooks which contact the rotating screw; and

FIG. **10** is a side elevational view of the coaster vehicle moving upwardly along the lift mechanism shown in longitudinal section.

DESCRIPTION OF THE PREFERRED EMBODIMENT

The trackway designed generally by reference numeral **10** in FIG. **1** is designed to simulate a ski slope and includes individual sections of varying configuration including the main downward slope section **12**, the loop-to-loop section **14**, the turnaround section **16**, the smaller slope **18**, the zig-zag sections **20** and **22**, the switching section **24** and the lift mechanism **26** described in detail hereinafter.

The sections of the trackway **10** are joined together by vertical supports **28** of varying height while clip **30** joins the adjacent parts of the loop-to-loop section **14.** Forming a part of each section are continuous rails **32** defining the path of the coaster vehicle along the trackway. Within the switching section **24** are located additional rails **32'**. As will be apparent, as the switching rail **34** is operated in conventional manner by the lever **36** the coaster vehicle is permitted to travel along either rails **32** or **32'**, as desired. Selection of rails **32'** permits the coaster vehicle to be automatically stopped within the switching section **24** by protruding button **38** which when lowered by the action of lever **40** permits the coaster vehicle to enter the lift mechanism **26.**

The lift mechanism **26,** as seen in FIGS. **2–5,** consists of a casing comprising segments **42** and **42'** suitably fastened together, for example, by bolts passing through openings **44.** A frame **46** is suitably fastened within casing segment **42.** Within frame **46** is mounted a motor **48** having a drive shaft terminating in a pinion wheel **50.**

The rotating helical screw **52,** as seen in FIG. **2,** is secured at one end to the casing by support **54.** The other end of screw **52** passes through and is mounted for rotation with respect to frame **46** and terminates in gear wheel **56** which meshes with pinion wheel **50.**

Casing segment **42** is further provided with a housing **58** equipped with electrical contact members **60** and **62** for enclosing batteries **64,** as seen in FIG. **3.** Suitable wiring **66** connects contact members **60** and **62** with motor **48** energizing same when the switch **68,** as seen in FIGS. **3, 4** and **5,** is turned to its "on" position wherein knob **70** forces leaf spring contact **72** into engagement with the housing of motor **48** closing the electrical circuit. Thus, as switch **68** is turned to the on position motor **48** is energized rotating screw **52.**

The coaster vehicle is generally designated by reference numeral **74,** and, as seen in FIGS. **6–10,** includes a carriage **76** below which are mounted two trucks or wheels **78** and above which is mounted the figure of a skier **80.** Although not shown in the drawings, each truck **78** has an axle the ends of which are pointed. The pointed ends are confined within holes of slightly larger diameter ensuring smooth running and necessary speed. As seen in FIG. **9,** the figure **80** is mounted to carriage **76** by screw **82** which also secures a weight **84,** necessary to achieve the required balance and momentum. Formed as a part of carriage **76** and depending therefrom are forward and rearward hooks **86** and **88,** respectfully, as seen in FIG. **9.** The purpose of hooks **86** and **88** will now be explained.

As will now be apparent, and as illustrated in FIGS. **8** and **10,** as the skier coaster vehicle **74** enters the lift mechanism **26** the rotating screw **52** contacts the forward hook **86** propelling the coaster vehicle **74** upwardly along the lift mechanism **26.** Thereafter, the ro-

tating screw **52** engages the rear hook **88** continuing to propel the coaster vehicle upwardly, as seen in FIG. **10.** The coaster vehicle **74** is confined to the lift mechanism **26** by the action of lugs **90** against the inwardly facing flanges **92,** as seen in FIG. **8.** As the coaster vehicle **74** reaches the top of the lift mechanism the rotating screw **52** continues to push the rearward hook **88** forcing the coaster vehicle **74** forward until it begins its downward run along the main slope section **12** passing directly into and thru the loop-to-loop section **14** under the momentum of the coaster vehicle. After successfully negotiating the loop-to-loop section **14** the vehicle **74** turns in section **16,** safely maneuvers the junior slope **18** and zig-zags its way through sections **20** and **22.** Thereafter, the vehicle **74** enters the switching station **24** wherein, depending upon the position of rail **34,** it either continues along rails **32** for immediate reentry into the lift mechanism **26** or rails **32'** wherein protruding button **38** stops the vehicle **74** until the lever **40** is depressed again permitting the coaster vehicle **74** to reenter the lift mechanism **26.**

I claim:

1. An amusement device comprising:

a trackway provided with a surface and having a first end of lower elevation than a second end thereof;

a lift mechanism interposed between and connected to said ends of said trackway, said lift mechanism being provided with a pair of inwardly facing flanges defining therebetween a continuous opening extending between said ends of said trackway, a rigid elongated helical screw extending the length of said lift mechanism and located below said opening therein, means rotating said screw; and

a vehicle provided with wheels which engage said surface of said trackway as said vehicle moves from said second end to said first end thereof, said vehicle being provided with at least one downwardly extending flange terminating above the bottoms of said wheels, a portion of said flange extending within said screw such that the rotation of said screw moves said vehicle upwardly along said lift mechanism, said vehicle further being provided with outwardly extending lugs positioned adjacent said inwardly extending flanges of said lift mechanism stabilizing said vehicle during movement along said lift mechanism.

2. An amusement device as in claim **1,** wherein said inwardly facing flanges are provided along the top of said lift mechanism.

3. An amusement device as in claim **1,** wherein the bottoms of said wheels of said vehicle rest upon said screw when said vehicle is moving upwardly along said lift mechanism.

4. An amusement device as in claim **1,** wherein said flanges of said lift mechanism are higher in elevation than said surfaces of said ends of said trackway at the intersections of said lift mechanism and said ends of said trackway.

5. An amusement device as in claim **1,** wherein said lugs of said vehicle are positioned below said inwardly extending flanges of said lift mechanism.

6. An amusement device as in claim **1,** including a second flange extending downwardly from said vehicle, a portion of said second flange extending within said screw.

7. An amusement device as in claim **1** wherein said means rotating said screw comprises a motor mounted within said lift mechanism having a drive shaft terminating in a pinion wheel, said screw terminating at one end in a gear wheel meshing with said pinion wheel.

8. An amusement device as in claim **1,** wherein said trackway includes means defining a loop-to-loop section wherein said vehicle moves vertically through 360°.

9. An amusement device as in claim **1,** wherein said trackway includes a switching section comprising a second surface, means within said second surface for stopping said vehicle and means permitting said vehicle to travel along either of said surfaces, as desired.

* * * * *