Feb. 20, 1973 L. MANCINI 3,717,841

SOCKET TERMINAL

Filed May 18, 1972

Fig. 1

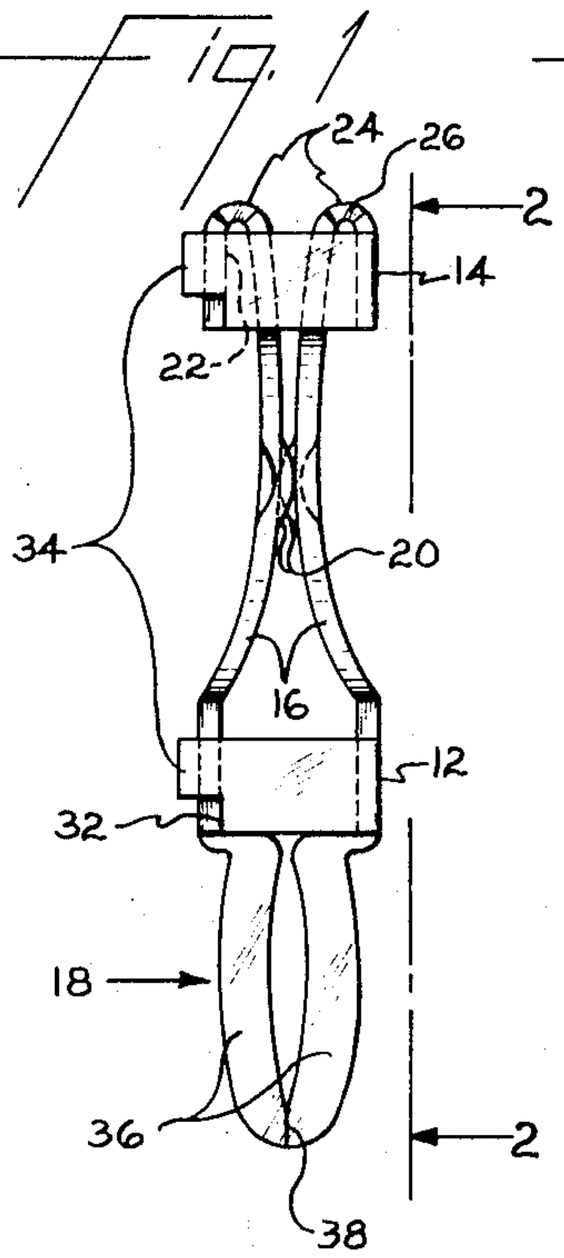


Fig. 2

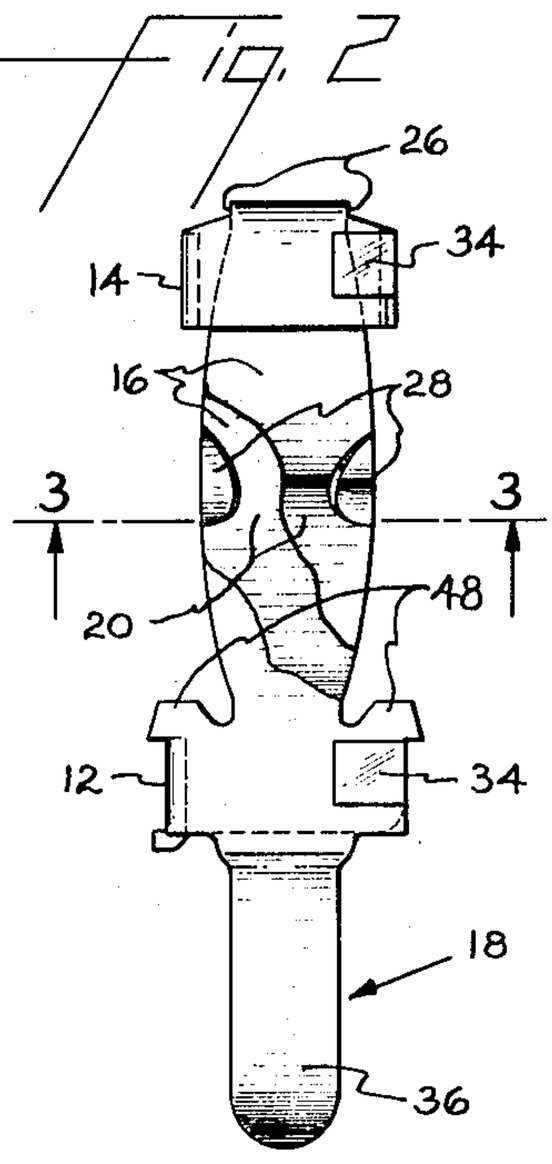


Fig. 3

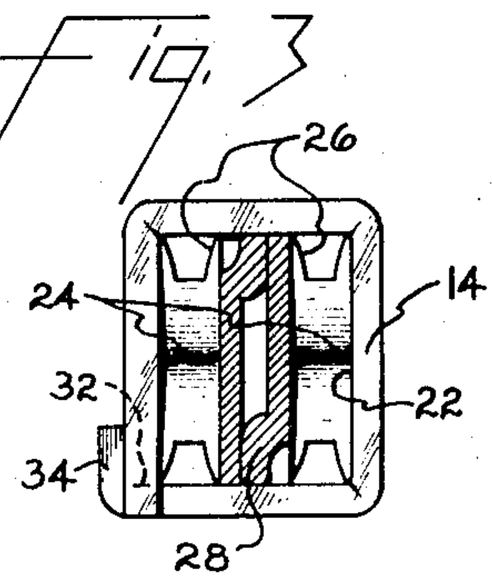


Fig. 7

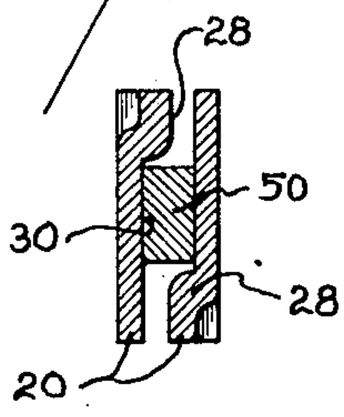


Fig. 8

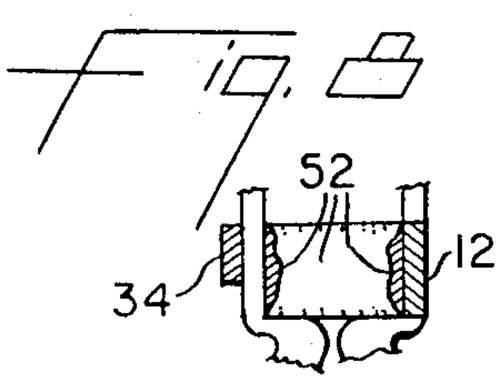


Fig. 4

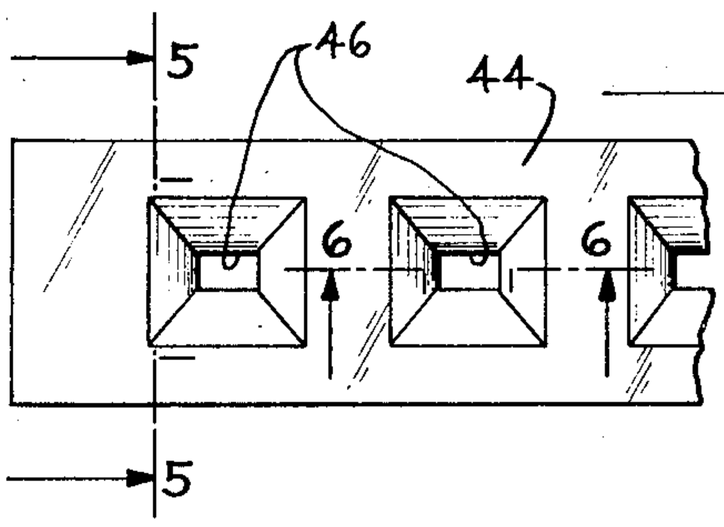


Fig. 5

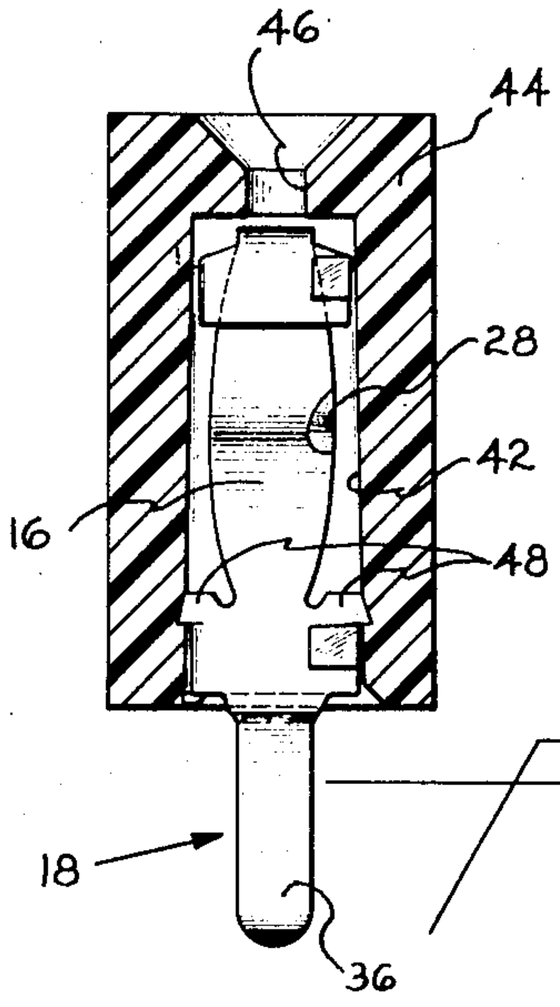


Fig. 6

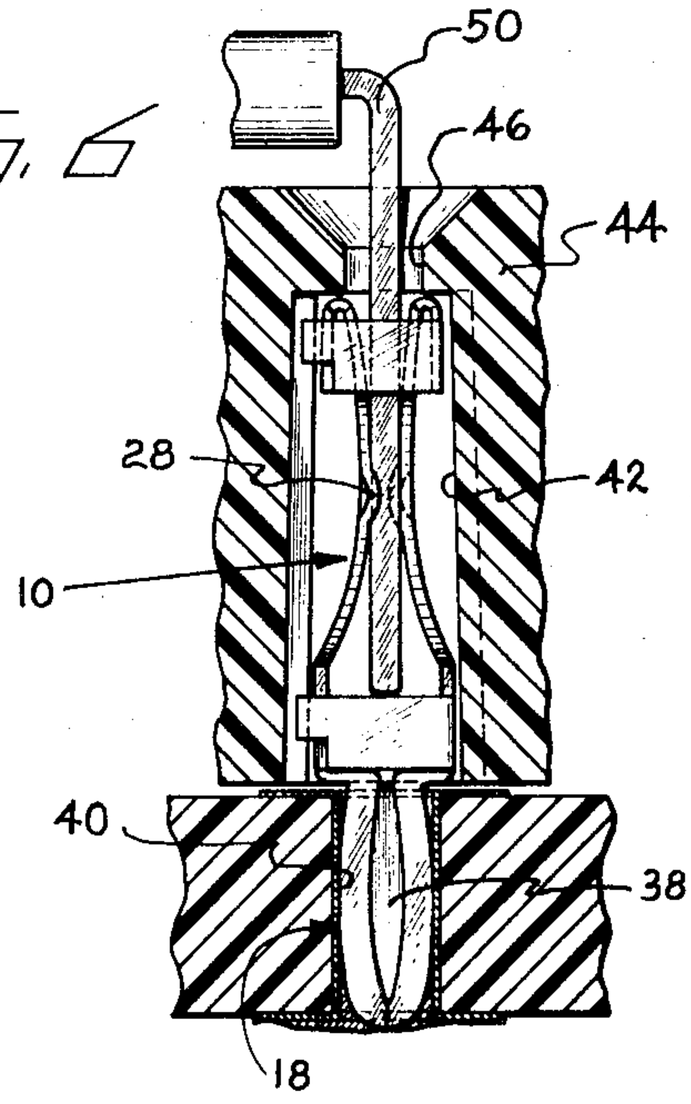

United States Patent Office

3,717,841
Patented Feb. 20, 1973



3,717,841

# SOCKET TERMINAL

Lloyd Mancini, New Cumberland, Pa., assignor to Berg Electronics, Inc., New Cumberland, Pa.

Filed May 18, 1972, Ser. No. 254,369
Int. Cl. H01r *11/22*
U.S. Cl. 339—258 11 Claims

## ABSTRACT OF THE DISCLOSURE

A socket terminal for removably receiving an elongate lead having a pair of spaced collars connected by a pair of opposed and inwardly bowed spring contacts. The contacts extend through the interior opening of one collar to join the outer edge of the collar away from the other collar.

The invention relates to an improved socket terminal formed from thin flat sheet metal stock and adapted to be mounted on a circuit board. The socket terminal has a pair of opposed inwardly bowed spring contacts extending between a pair of spaced aligned collars and through the interior opening of one of the collars to joint the outer edge of the collar. The extension of the spring contacts results in a compact terminal having desirably long spring contacts for a given size terminal.

A bowed resilient pin extends from one end of the socket terminal for mounting the terminal in a circuit board hole. Halves of the pin are bowed outwardly of each other to form a spring system for resiliently retaining the socket terminal in the circuit board hole prior to soldering.

Locking tabs extend across seams in the collars to prevent opening of the collars at the seams upon insertion of a lead into the socket terminal. In this way an improved spring connection is achieved between the lead and the spring contacts. Tear-shaped locating projections are provided on the median portions of the spring contacts to guide the lead into proper alignment during insertion. A solder resist may be provided in the interior of the collar adjacent the circuit board pin to prevent molten solder from being drawn up between the spring contacts.

Socket terminals of the type disclosed herein are shown in U.S. Pats. Nos. 3,262,087, 3,268,851 and 3,262,008. The disclosed socket terminal represents a marked improvement over the conventional terminals. The spring contacts have a greater length for a given socket size thereby improving the contact properties of the terminal. Greater length results from the fact that one end of the contacts extends through a collar to join the outer collar edge. Permanent closure of the collar seams so that they do not open when a lead stresses the spring contacts further enhances the spring properties of the terminal by removing the collars from the contact spring system.

Other objects and features of the invention will become apparent as the description proceeds, especially when taken in conjunction with the accompanying drawings illustrating the invention, of which there is one sheet.

In the drawings:

FIG. 1 is a side view of a socket terminal according to the invention;



FIG. 2 is a partially broken away view taken along line 2—2 of FIG. 1;

FIG. 3 is a sectional view taken along line 3—3 of FIG. 2;

FIG. 4 is a top view of a connector block holding socket terminals in accordance with the invention;

FIGS. 5 and 6 are sectional views taken along lines 5—5 and 6—6 respectively of FIG. 4;

FIG. 7 is a sectional view showing a lead confined between the spring contacts; and

FIG. 8 is a partially broken away view illustrating a solder resist coating within the interior of the collar 12.

As illustrated in FIGS. 1 and 2, socket terminal 10 includes ap air of spaced and aligned square collars 12 and 14 interconnected by a pair of opposed inwardly bowed spring arms or contacts 16 and generally cylindrical circuit board pin 18. The spring contacts 16 extend from opposite sides of collar 12 and are inwardly bowed to engage each other at contact area 20. They extend from the contact area 20 through the interior opening 22 of collar 14 and are bent back through reverse bends 24 to join opposed outer edges of collar 14. As indicated in FIG. 2 the width of the spring contacts 16 decreases to either side of contact area 20 so that the springs are stressed uniformly upon insertion of a lead. Notches 26 are provided at the reverse bends 24 to facilitate flexing of the contacts or arms 16.

As indicated in FIGS. 2 and 3, a tear-shaped locating dimple 28 is formed on one edge of each spring arm 16. The edge 29 of each dimple adjacent collar 14 is gradually tapered to the edge of the spring arm so that dimples form lead-ins or guides to assure that a lead end of a contact inserted through collar 14 and between the spring arms is properly guided into the socket. Dimples 28 hold the spring arm contact surfaces 30 apart a slight distance prior to insertion of the contact into the socket terminal.

Socket terminal 10 is formed from thin sheet metal stock so that the collars 12 and 14 are each provided with seam 32 and 34 extending across the collars at one corner of the collars. A locking tab 34 extends from one edge of each collar across the seam and is bent into flat engagement with the collar at the opposite side of the seam to prevent opening of the seams when a contact is inserted into the socket. In this way the contact surfaces 30 are maintained parallel to each other upon insertion of a lead thereby improving the spring characteristics of the socket terminal. If the seams were allowed to open the spring arms 16 would be twisted somewhat to each other and the contact pressure between the lead and the spring arms would be reduced. Tabs 34 assure that the surfaces 30 are maintained in parallel relationship and that a high contact pressure is achieved. The collars are rigid and do not form part of the contact spring system.

The extension of spring arms 16 through collor 14 results in a very compact terminal with long spring arms for a given height. In conventional terminals disclosed in the United States patents previously referred to, the spring arms extend between opposing edges of the collars. The present construction enables longer and more resilient arms to be used in a socket of a given height thus improving the spring characteristics of the socket. Alternatively, the height of the socket could be reduced below that of conventional sockets without reducing the length

of the spring contacts. The compact design of the socket terminal **10** is important in modern circuit design where a minimum of space is available. Socket terminals **10** may be used for mounting integrated circuit modules on circuit boards where it is desirable to minimize the height of the module above the circuit board. The compact design of the terminal **10** saves space and provides improved contact performance.

Generally cylindrical circuit board pin **18** is formed from a pair of curved channels **36** extending outwardly of opposed edges of collar **12.** Seam **38** separates channels **36.** The channels are bowed outwardly apart from each other to open the seam **38** somewhat and to provide a resiliency permitting mounting of a terminal **10** in a circuit board hole **40** having a diameter slightly less than the median portions of channels **36.** Insertion of the pin in hole **40** bends the channels toward each other to form a tight resisient fit. The pin may be soldered in the hole to form a permanent connection.

Socket terminals **10** may be mounted in cavities **42** in insulating connector block **44** as indicated in FIGS. 5 and 6. Entrances **46** extend through one side of block **44** to communicate with each cavity **42.** A lead **50** inserted through an entrance is pushed through the interior opening of collar **14** and between spring **16** to form an electrical connection between the socket terminal and pin at contact surfaces **30.** As indicated in FIG. 6, the rectangular lead spreads the spring arms apart thereby flexing the spring to provide the desired contact pressure between the lead and contact areas **30.** Barbs **48** extending laterally outwardly of collar **12** engage the body of block **44** to hold the socket terminals **10** within cavities **42.**

A solder resist coating may be applied within the interior of collar **12** to prevent molten solder from wicking up between contact arms **16** when the terminal **10** is soldered in the circuit board hole **14.** FIG. 8 illustrates a solder resist coating **52** applied within the interior of collar **12.**

While I have illustrated and described a preferred embodiment of my invention, it is understood that this is capable of modification, and I therefore do not wish to be limited to the precise details set forth, but desire to avail myself of such changes and alternations as fall within the purview of the following claims.

What I claim as my invention is:

**1.** A socket terminal comprising a pair of spaced aligned collars; contact means at a collar for forming an electrical connection; and a pair of opposed and longitudinally inwardly bowed spring contacts connecting said collars, each spring contact extending from one collar through the interior opening of the other collar and joining said other collar at the edge thereof away from said one collar.

**2.** A socket terminal formed from thin strip metal stock comprising a pair of spaced aligned collars; contact means at a collar for forming an electrical connection with a circuit element; and a pair of opposed spring contacts, each spring contacting extending from one collar through the interior opening of the other collar and joining said other collar at the edge thereof away from said one collar, seams in each of said collars and locking means holding said seams closed whereby insertion of a lead between said collars stresses the spring contacts without opening the collars at the seams.

**3.** A socket terminal as in claim **2** wherein said collars are square, said seams are located at socket corners and said locking means comprise tabs each extending across a seam and overlying the collar across the seam.

**4.** A socket terminal comprising a pair of spaced aligned collars; contact means at a collar for forming an electrical connection; and a pair of opposed spring contacts connecting said collars, each spring contact extending from one collar through the interior opening of the other collar and joining said other collar at the edge thereof away from said one collar; solder resist means at



the junction between said means for forming an electrical connection and the adjacent collar for preventing the flow of motion solder from said means for forming an electrical connection into said adjacent collar.

**5.** An integral socket terminal formed a single portion of thin strip metal and comprising a female disconnect socket body for removably receiving an elongate contact member including a pair of spaced collars and a pair of inwardly bowed spring contacts joining said collars, each collar including a seam, and a contact pin at one collar extending away from said collar for mounting the socket terminal in a circuit board hole or the like, said pin comprising a pair of semi-cylindrical legs positioned adjacent each other and separated by a longitudinal seam forming an extension of the seam in said one collar, the median portions of said legs being outwardly bowed to form a spring system for resiliently confining the pin in a circuit board hole.

**6.** A socket terminal for removably receiving an elongate contact member comprising a pair of spaced aligned rectangular collars; a contact means on one collar; a pair of opposed spring contacts extending from said one collar through the opening in said second collar and joining said second collar on the edge thereof away from said one collar; said spring contacts being bowed toward each other median portions normally engaging, said collars each including a strap having ends joining at a seam; and tabs bridging said seams for preventing opening of said seam upon insertion of a lead through the interior opening of said second collar and between said spring contacts.

**7.** A socket terminal as in claim **6** wherein said contact means comprises a contact pin for mounting the socket terminal in a hole in a circuit board or like member; said pin including a spring system for resiliently engaging the interior of the hole.

**8.** A socket terminal comprising a pair of spaced aligned rectangular collars; a pair of opposed and longitudinally inwardly bowed spring contacts extending between said collars for establishing electrical connection with a lead inserted through one collar and therebetween; a seam extending through a corner of each of said collars; and locking means comprising a tab extending from a portion of each collar adjacent a seam around the corner and across the seam with the free end of the tab on the outside of the portion of the collar across the seam for preventing opening of the collars upon insertion of a lead into the socket.

**9.** A socket terminal comprising a pair of spaced aligned collars; contact means at one collar; a pair of opposed inwardly bowed spring contacts each having side edges, said spring contacts extending between said collars; and a pair of inwardly directed tear drop shaped aligning projections located on non-adjacent edges of the median portions of said spring contacts, said projections including lead-in surfaces gradually tapered outwardly toward the edges of said spring contacts and facing in a direction toward the other of said collars for guiding a lead inserted through such collar to a position between said median portions.

**10.** An integral socket terminal comprising a pair of spaced aligned collars; contact means at a collar; and a pair of longitudinally inwardly bowed opposed spring contacts interconnecting said collars, each spring contact extending from one collar through the interior opening of the other collar and joining said other collar.

**11.** An integral socket terminal comprising a pair of spaced aligned collars; contact means at a collar; and a plurality of longitudinally inwardly bowed spring contacts solely interconnecting said collars, each spring contact extending from one collar through the interior opening of the other collar and joining said other collar.

**(References on following page)**

**References Cited**

UNITED STATES PATENTS

| | | | |
|---|---|---|---|
| 1,194,122 | 8/1916 | Ball | 339—258 |
| 1,553,952 | 10/1923 | Nero | 339—191 |
| 1,841,736 | 12/1932 | Jones | 339—217 |
| 3,047,832 | 7/1962 | Deakin | 339—217 |
| 3,262,087 | 7/1966 | Mancini | 339—256 |
| 3,268,851 | 8/1966 | Mancini | 339—258 |
| 3,362,008 | 12/1968 | Berg | 339—258 |
| 3,107,966 | 10/1963 | Bonhomme | 339—262 R |
| 3,363,224 | 12/1968 | Gluntz | 339—258 R |





| | | | |
|---|---|---|---|
| 3,659,243 | 4/1972 | Gluntz | 339—258 R |
| 3,226,669 | 12/1965 | Lutz | 339—258 P |

FOREIGN PATENTS

| | | | |
|---|---|---|---|
| 1,406,969 | 6/1965 | France | 339—252 P |



MARVIN A. CHAMPION, Primary Examiner

W. F. PATE, Assistant Examiner

U.S. Cl. X.R.

339—17 C, 17 CF, 217 S, 252 P