United States Patent

Wallo

[15] **3,694,792**

[45] **Sept. 26, 1972**

[54] **ELECTRICAL TERMINAL CLAMP**

[72] Inventor: **William H. Wallo,** Chicago, Ill.

[73] Assignee: **Wall-Able Manufacturing Corporation,** Chicago, Ill.

[22] Filed: **Jan. 13, 1971**

[21] Appl. No.: **106,050**

[52] **U.S. Cl.**.....**339/97 R,** 24/73 SA, 339/217 S, 339/246

[51] **Int. Cl.**.....**H01r 9/08**

[58] **Field of Search**....339/95, 97, 98, 128, 217, 246; 24/73 SA, 73 SM, 73 MF; 85/80; 151/41.75

[56] **References Cited**

UNITED STATES PATENTS

3,050,706	8/1962	Kitscha	339/246
3,340,497	9/1967	Balint	339/128
2,525,123	10/1950	Frank	339/97 R
3,421,135	1/1969	Soltysik et al.	339/217 S
3,594,703	7/1971	Holtzapple	339/97 R

FOREIGN PATENTS OR APPLICATIONS

1,133,788	11/1968	Great Britain	339/95 R

Primary Examiner—Joseph H. McGlynn
Attorney—Hill, Sherman, Meroni, Gross & Simpson

[57] **ABSTRACT**

An electrical terminal clamp has opposed clamping members at least one of which is electrically conductive and between which is adapted to be received an electrical wire covered with pliable insulation, the electrically conductive member having thereon a rigid contact ridge across which the insulated wire is received such that when the clamping members are forced together to squeeze the insulated wire therebetween, the ridge is pressed into the insulation to effect an electrical contact with the wire. The contact ridge feature may be embodied in a generally U-shaped electrical connector equipped to be snapped into position in a prepared aperture in a terminal board, with the clamping members comprising a base web and a nut threaded on a screw engaged on the web, the ridge being pressed in said web so that the nut will be drawn theretoward by tightening the screw.

11 Claims, 5 Drawing Figures

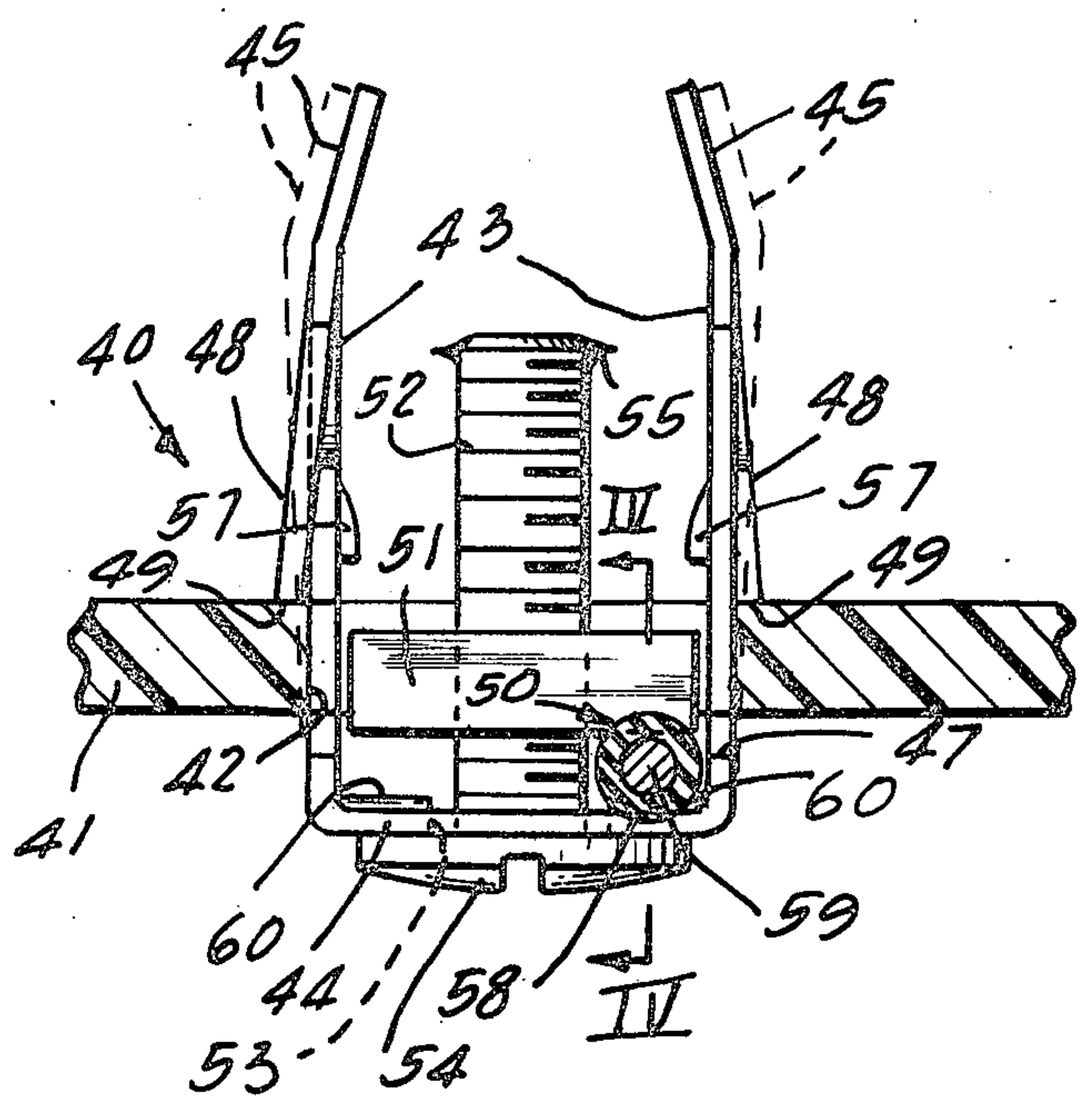

Fig. 1

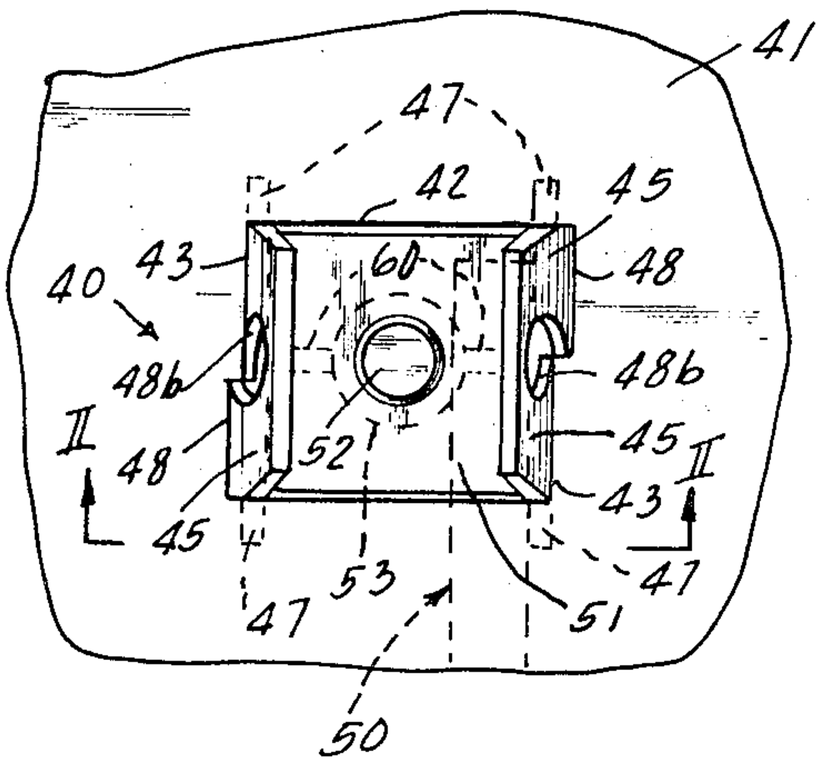

Fig. 2

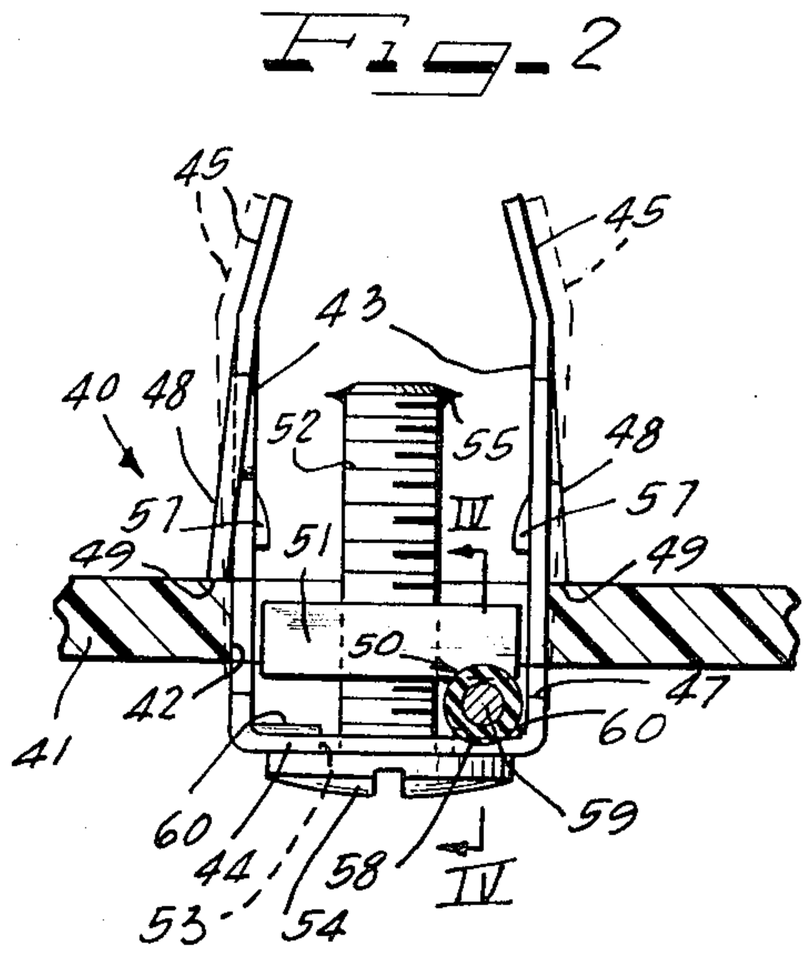

Fig. 3

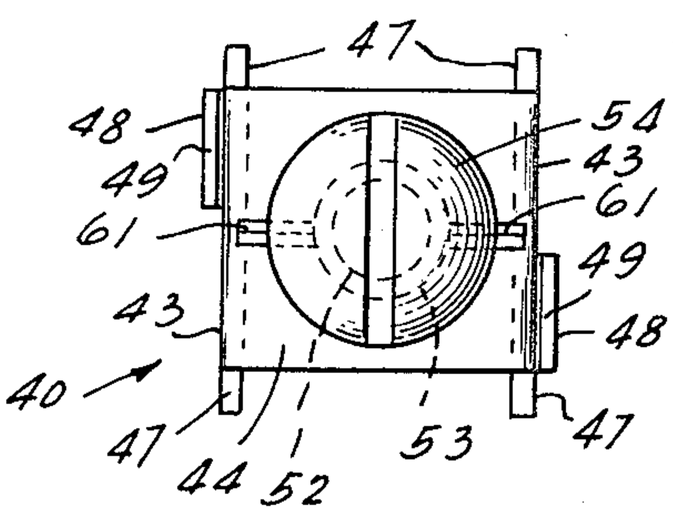

Fig. 4

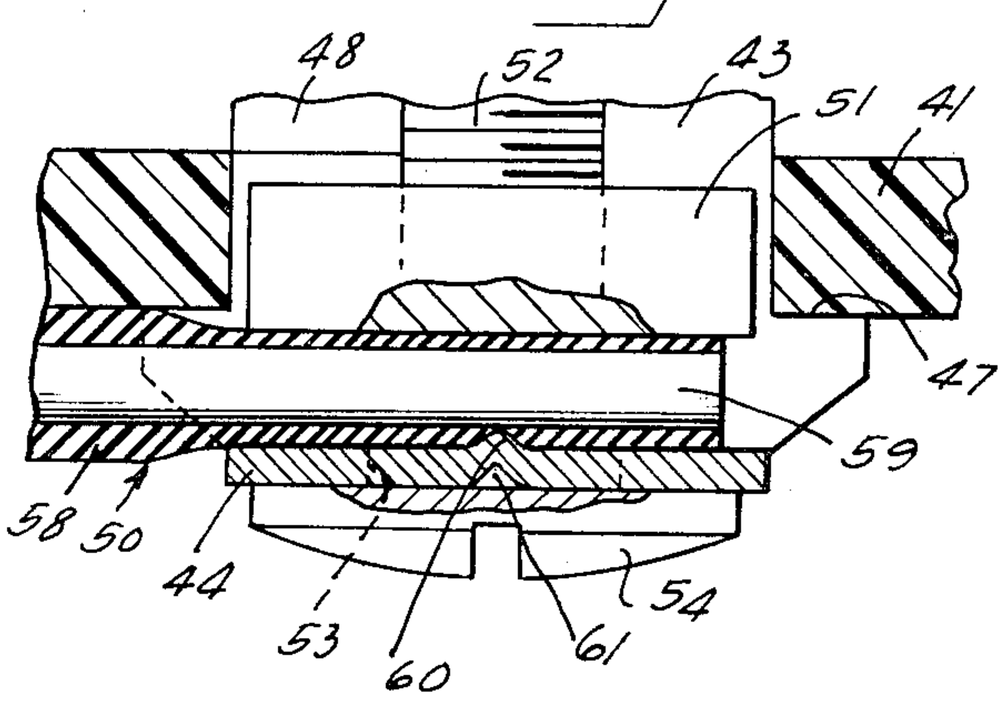

Fig. 5

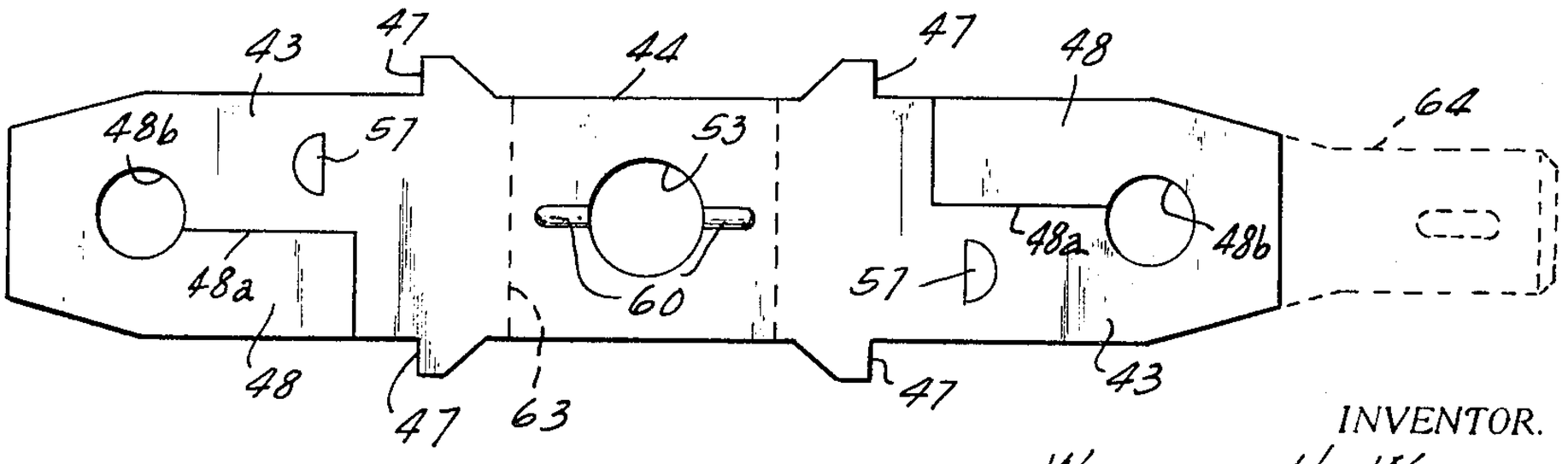

INVENTOR.
WILLIAM H. WALLO

BY Hill, Sherman, Meroni, Gross & Simpson ATTORNEYS

ELECTRICAL TERMINAL CLAMP

This invention relates to new and improved electrical terminal clamp devices and is more particularly concerned with such devices in electrical connectors of a type adapted to be mounted on dielectric panels such as binding post boards of the kind employed, for example, for connecting aerial leads in radio and television sets.

Prior connectors for effecting electrical connections with wires, such as aerial leads in radio and television sets, have generally required skinning or stripping off of the insulation at the terminal end of the wire, equipment of the terminal end with spade lugs, and the like; and where the wire comprises multiple strands soldering or tinning of the strands to provide a stable conductor terminal has often been deemed necessary. All of these expedients are time consuming and appreciably increase the costs of manufacture or installation. Further, the skinned or otherwise prepared wire terminals have required expert attention to proper gripping thereof to assure retention, especially against pulling away from the connector. This has often motivated the assembler or technician to overtighten the gripping means. Embrittlement, weakening, smashing or other damaging results are common occurrence. In television antennas, for example, cutting and smashing of the fine strands of antenna conductor cable normally causes inferior television picture quality. Another disadvantage of prior arrangements, especially those utilizing screw-actuated or applied gripping devices has been liability toward looseness due to vibrations from whatever cause, such as are frequently encountered in operation of the apparatus or due to environmental factors.

An important object of the present invention is to overcome the foregoing and other disadvantages, shortcomings, inefficiencies, and problems inherent in prior structures and to provide a new and improved electrical terminal clamp structure.

Another object of the invention is to provide a new and improved electrical terminal clamp structure which will avoid any need for stripping or skinning the insulation from wire terminals to be gripped thereby.

A further object of the invention is to provide a new and improved electrical terminal clamp having novel means for effecting electrical connection with an electrical wire.

Still another object of the invention is to provide a new and improved electrical terminal clamp in which an insulated wire is adapted to be gripped with unusual security without such pressure as would tend to damage the wire whether the wire be single strand or multi-strand.

Yet another object of the invention is to provide an electrical terminal clamp structure in an electrical terminal having new and improved means for snap-in mounting of the same on a supporting panel.

Other objects, features and advantages of the invention will be readily apparent from the following description of a preferred embodiment thereof, taken in conjunction with the accompanying drawing, although variations and modifications may be effected without departing from the spirit and scope of the novel concepts embodied in the disclosure, and in which:

FIG. 1 is a plan view of a mounting panel carrying an electrical connector having a terminal clamp structure according to the present invention;

FIG. 2 is a sectional elevational view taken substantially along the line II—II of FIG. 1;

FIG. 3 is a plan view of the connector of FIG. 1 looking at the opposite end of the connector;

FIG. 4 is an enlarged illustrative fragmentary elevational sectional view taken substantially along the line IV—IV of FIG. 2; and

FIG. 5 is a plan view of the body of the connector as it appears in the blank before it is formed up.

An electrical connector **40** embodying features of the invention is constructed and arranged to be attached to a dielectric panel **41** (FIGS. **1**, **2** and **4**) having therein a rectangular mounting hole **42** receptive of the connector. By way of example, the panel **41** may be a so-called circuit board, switch board, binding post board, antenna terminal panel or board, or the like. The connector **40** may be mounted on the panel **41** for effecting numerous and varied electrical connections by and between wires of electrical apparatus, such, for example, as for detachable connection of an antenna lead terminal at one face of the panel while one or more circuit wires may be soldered to the connector at the opposite face of the panel.

In a preferred construction, the connector **40** is made from relatively thin sheet metal which is sufficiently stiff to be form-stable under conditions of intended use, but is possessed of characteristics enabling high speed, low cost progressive die forming of the sheet metal part and which after working is substantially resilient for intended purposes. To enable reception of the connector **40** in the rectangular aperture **42**, the connector is provided with a pair of spaced parallel similar legs **43** which may be coextensive but which may be of different lengths, but in any event are connected together in a one-piece structure by a connecting or base web **44** at one of their ends, in a generally U-shape arrangement, and dimensioned to be received in complementary relation within the hole **42**, with the outer faces of the legs in close slidable relation to opposite sides of the hole while the respective opposite edges of each of the legs fit in close slidable relation to the remaining edges of the hole. Thereby, mounting of the connector **40** in the hole **42** is readily effected by inserting the free ends of the legs **43** into the hole and pushing the connector into position. To facilitate this, the terminal portions of the legs are preferably toed in toward one another generally convergently and thereby provide lead-in cam respective surfaces **45**.

Means on the connector **40** for maintaining it in position against unintentional displacement from the hole **42** comprise at each side of each of the legs, and suitably spaced from the web **44**, a laterally extending stop shoulder **47** which faces in the direction of the major longitudinal extent of the contiguous leg edge, that is toward the free end of the leg. All of the shoulders **47** are in the same plane so that they will make substantially uniform contact with the surface of the panel **41** from which the legs **43** are inserted into the hole **42**. The shoulder means engageable with the opposite surface of the panel comprise respective automatically acting resilient locking shoulder lugs or tabs **48** on the legs **43** and each provided with a locking

edge **49** which is outwardly off-set relative to the associated leg and faces generally toward the plane of the shoulders **47** and spaced therefrom equal to the thickness of the panel **41** with just enough tolerance for easy snap-in mounting of the connector.

Desirably, the locking tabs **48** are located at respective opposite sides of the legs **43** and are of sufficient size and flexibility to facilitate pressing them in opposition to their bias from an off-set, and in this instance generally parallel outward locking disposition relative to the outer faces of the legs. Each of the tabs **48** is partially separated from its leg **43** as by shear-forming in such a manner that one of its side edges coincides with the adjacent side edge of the leg while its opposite edge and the locking edge **49** thereof is separated from the leg along an angular shear line **48***a* (FIG. **5**) which runs out at one end at the adjacent side edge of the leg and runs out at its opposite end in a solder lug opening **48***b* in the free terminal end portion of the leg. Thereby the portion which connects the respective locking tab to its leg is somewhat narrower than the tab, facilitating resilient flexure of the tab between locking and non-locking positions relative to the outer face of its leg, not only facilitating snap-in mounting of the connector, but enabling ready separation of the connector from the panel by pressing the locking tabs toward one another to clear the adjacent edge defining the mounting hole **42**. Operation of the tabs **48** is facilitated by having the legs **43** normally slightly splayed, that is divergently related relative to one another as indicated in dash outline in FIG. **2**, so that when the connector is pressed home by inserting the cam surfaces **45** into the hole **42**, and pressing toward the cam surfaces on the base web **44**, the legs will be caused to yield resiliently toward one another, and the locking tabs **48** will be pushed toward one another until the stop shoulders **47** make contact with the face of the panel **41** and the legs **43** bias apart due to the resilient structure of the connector, and the tabs **48** snap into locking opposition of the edges **49** to the opposite face of the panel to lock the connector in place. By reason of the normally splayed relation of the legs **43**, they will tend to hug or press toward the confronting edges defining the hole **42** and thus retain the locking shoulder edges **49** efficiently in locking relation to the mounting panel.

For clamping an electrical lead wire **50** to the terminal device or connector **40**, the base or web **44** serves as an electrically conductive clamping member on and across which the wire **50** or at least a terminal end portion of the wire is received. As an opposed clamping member a threaded nut **51** is provided, desirably of square form dimensioned to be received freely but substantially non-rotatably between the legs **43** and engaged threadedly on a screw shank **52** extending through a central opening **53** in the web **44** and having a slotted or otherwise driver engageable head **54** which thrustingly opposes the outer face of the base web **44**. While the head **54** is adapted to clamp a spade terminal, or even a stripped terminal end of a wire to the base web **44**, a preferred connection is established by inserting the wire or at least the terminal end portion thereof between the web **44** and the nut **51** with the nut backed away sufficiently to receive the wire and then operating the screw to tighten the nut clampingly toward and against the interposed wire. Lateral escape of the wire is effectively precluded by the adjacent leg **43** and the screw shank, and twisting action of the nut **51** is precluded because it is held against turning by and between the legs **43** so that the nut moves in a straight line direction toward the base web **44** to clamp the wire terminal. By upsetting the tip of the screw shank **52** as shown at **55**, it is retained against being inadvertently disassembled from the nut **51**. By providing the legs **43** with inwardly pressed stop lugs **57**, shear-formed along stop edges and pressed inwardly, and spaced sufficiently from the web base **44** to enable efficient backing off of the nut relative to the web base, but spaced from the plane of the stop edges **49** less than the thickness of the panel **41**, the nut **51** can not escape from the assembly even though for any reason the screw is completely disengaged from the nut. The stops **57** also provide a convient thrust base toward which the nut **51** may be driven when it is desired to back the screw head **54** away from the web base **44** to provide a gap receptive of a terminal such as a spade lug.

As an important feature, the present invention provides novel means enabling effecting an electrical connection with the wire **50** even though pliable insulation **58** covering the wire conductor **59**, whether a single strand as shown or a multi-strand construction, remains in place about the wire conductor and is not skinned or stripped therefrom. For this purpose, the base web **44** is provided with a rigid contact ridge **60** which projects toward the clamping nut **51** and is located, preferably aligned with the screw access and normal to the planes of the legs **43** to receive the insulated wire thereacross when the wire is inserted in the normal fashion into position in the clamp between the screw shank and one of the legs. As it will be observed, the ridge **60** is located to extend between the respective legs **43** and diametrically opposite sides of the screw clearance hole **53**. Thereby the wire will extend across the ridge at either side of the screw shank or two or more of the wires can be inserted in the clamp at each side of the screw shank, as preferred. As the clamping members are forced together to squeeze the insulated wire therebetween, the ridge **60** is pressed into the insulation to effect an electrical connection with the wire core conductor **59**. Excessive biting of the ridge into the insulation is avoided by having the blunt ridge of radiused crown rib form and of only limited height calculated to be sufficient to make the desired contact when the clamping members have been thoroughly but not excessively tightened into gripping engagement with the insulated wire wherein the insulation is gripped by the clamping members in ample squeezed relation to hold the wire against being pulled from the clamp but without crushing the conductor core. In fact, by its indented reception in the insulation **58**, the ridge **60** serves not only as means to effect electrical contact between the base web **44** and the conductor of the wire, but as anchoring means to effect the arrangement of the wire having a pull strength which is increased greatly over prior arrangements because of the gripping of the insulation and the metal conductor or the wire simultaneously.

Because of spring-back or recovery factor in the squeezed insulation **58**, frictional resistance to loosening is enhanced between the threaded nut **51** and the screw shank **52** and between the head **54** and the web **44** or a terminal engaged between the head and web.

Formation of the rigid, blunt contact projection, insulation interlock lug ridge **60** is readily accomplished by pressing the same in the base web **44**, evidenced by an indentation **61** in the outer face of the web. In one form, the ridge **60** may be about half as high as the thickness of the material of the web **44**. For example, where the material of the base web **44** is about 0.025 inch in thickness, the ridge **60** may project therefrom on the order of 0.010 to 0.015 inch.

In making the sheet metal portion of the device, it is formed up from strip sheet metal stock into a blank as shown in FIG. **5**, with the various elements of the structure sheared and formed, whereafter the legs **43** are bent up along parallel juncture bend lines **63** at the opposite ends of the web **44** into the desired angular relation to the web. Although the legs **43** may themselves serve as soldered lugs, they may optionally be provided either or both with a solder lug tab extension **64** at their free ends.

As will be observed, the shoulders **47** are preferably spaced a limited distance from the inside plane of the web **44** to provide a terminal-receiving gap between such plane and the adjacent plane of the panel **41** in assembly therewith.

It will be understood that variations and modifications may be effected without departing from the spirit and scope of the novel concepts of this invention.

I claim as my invention:

1. In an electrical connector adapted to be mounted in assembly with a panel having opposite faces and a connector-receiving hole therethrough:

a generally U-shaped electrically conductive structure having a base web and legs extending in the same general direction from the opposite ends of the web;

shoulders adjacent the web ends of said legs for engaging a face of the panel;

shoulder means on said legs offset from the outer faces thereof for engagement with the opposite face of the panel in cooperation with said shoulders to retain the structure on the panel;

said legs being resilient and splayed relative to one another from said web to a wider spacing at their free end portions than the receiving hole in the panel; and

cam means on said free end portions engageable with edge areas of the panel at the receiving opening to cam the legs for tensioned movement from said splayed relation toward one another in response to assembly pressure applied through said web toward the legs to thrust the legs through the receiving opening and until said shoulder means snap into retaining engagement with said opposite face of the panel as a result of the resilience of the legs resisting said tensioned movement toward one another.

2. A connector according to claim **1**, in which said shoulder means comprise tabs extending in offset generally parallel relation to the outer faces of the respective legs and provided with shoulder edges spaced from the plane of said shoulders a distance about equal to the thickness of the panel with which the connector is to be assembled.

3. A connector according to claim **1**, said cam means comprising terminal portions of said legs turned generally toward one another.

4. In combination in an electrical connector for assembly with a panel having opposite faces and a connector-receiving hole therethrough:

a generally U-shaped electrically conductive connector structure having a base web and legs extending in the same general direction from the opposite ends of the web to extend through the receiving hole in the panel;

shoulders on said legs spaced from said web for engaging a face of the panel and maintaining the area of said web between said legs in a plane spaced from the adjacent plane of the panel;

means on said legs engageable with the opposite face of the panel in cooperation with said shoulders to retain the connector structure on the panel;

means carried by said web for clamping onto said web area an electrical wire which is received therebetween in the space between said planes and includes a conductor covered by pliable insulation; and

part of said area being raised relative to other of said area and said raised part being squeezed into said insulation as a result of said clamping pressure.

5. A combination according to claim **4**, wherein said part of said area comprises a contact projection thrust by the clamping pressure through the insulation to effect an electrical contact with said conductor.

6. A combination according to claim **5**, including a hole in said web, said projection comprising a radiused ridge extending between said hole and one of said legs substantially centered on said web, and said means for clamping comprising a screw having a shank extending through said hole and nut threaded on said shank and adapted to be backed away from said web area by manipulation of the screw to provide clearance for reception of the wire across said ridge and functioning by operation of the screw to press the wire against said ridge to effect said electrical connection by pressing the ridge into the insulation.

7. A combination according to claim **4**, said legs being resilient and splayed relative to one another from said web to a wider spacing at their free end portions than the receiving hole in the panel, and cam means on said free end portions engageable with edge areas of the panel at the receiving hole to cam the legs for tensioned movement from said splayed relation toward one another in response to assembly pressure applied through said web toward the legs to thrust the legs through the receiving hole and until said means on said legs engageable with the opposite face of the panel snap into retaining engagement with said opposite face of the panel as a result of the resilience of the legs resisting said tensioned movement toward one another.

8. A combination according to claim **7**, said cam means comprising terminal portions of said legs turned generally toward one another.

9. In combination:

a panel having opposite faces and a connector-receiving hole therethrough;

a generally U-shaped electrically conductive connector structure having a base web and legs extending in the same general direction from the opposite ends of the web and extending through said receiving hole in the panel;

shoulders on said legs spaced from said web and engaging a face of the panel and maintaining the area of said web between said legs in a plane spaced from the adjacent plane of said face of the panel;

means on said legs engaging with the opposite face of the panel in cooperation with said shoulders and thereby retaining the connector structure on the panel;

an electrical wire including a conductor covered by pliable insulation, engaged on said web area;

part of said area being raised relative to other of said area;

and means carried by said web for clamping said wire onto said web area and squeezing said raised part into said insulation as a result of the clamping pressure.

10. A combination according to claim **9**, wherein

said part of said area comprises a contact projection thrust by the clamping pressure through the insulation to effect an electrical contact with said conductor.

11. A combination according to claim **10**, including a hole in said web, said projection comprising a radiused ridge extending between said hole and one of said legs substantially centered on said web, and said clamping means comprising a screw having a shank extending through said hole and nut threaded on said shank and adapted to be backed away from said web area by manipulation of the screw to provide clearance for reception of the wire across said ridge and functioning by operation of the screw to press the wire against said ridge to effect said electrical connection by pressing the ridge into the insulation.

* * * * *