United States Patent

Hackmann et al.

[15] **3,691,908**

[45] **Sept. 19, 1972**

[54] **COMBINED HYDRAULIC AND MECHANICAL DETENT DISENGAGING MEANS**

[72] Inventors: **Larry G. Hackmann; James L. Schmitt,** both of Washington, Ill.

[73] Assignee: **Caterpillar Tractor Co.,** Peoria, Ill.

[22] Filed: **June 14, 1971**

[21] Appl. No.: **152,713**

[52] **U.S. Cl.** **91/412,** 91/414, 137/624.27

[51] **Int. Cl.** **F15b 11/16,** F15b 13/01

[58] **Field of Search** 91/412, 414; 137/624.27

[56] **References Cited**

UNITED STATES PATENTS

1,968,422	7/1934	Proctor et al.	91/414 X
2,184,793	12/1939	Clench	91/414 X
2,844,942	7/1958	Reynolds	91/412 X
2,918,902	12/1959	Robinson et al.	91/412 X

Primary Examiner—Edgar W. Geoghegan

Attorney—Charles M. Fryer et al.

[57] **ABSTRACT**

Hydraulic kick-out circuitry and mechanism for automatically releasing work implement control valves from detented positions to neutral positions when the work implement actuating hydraulic cylinders controlled by the valves reach the ends of their strokes. The arrangement is such that in a multiple control valve system the valves are released in a sequential order with a low kick-out force which can be overriden by the operator when necessary.

9 Claims, 3 Drawing Figures

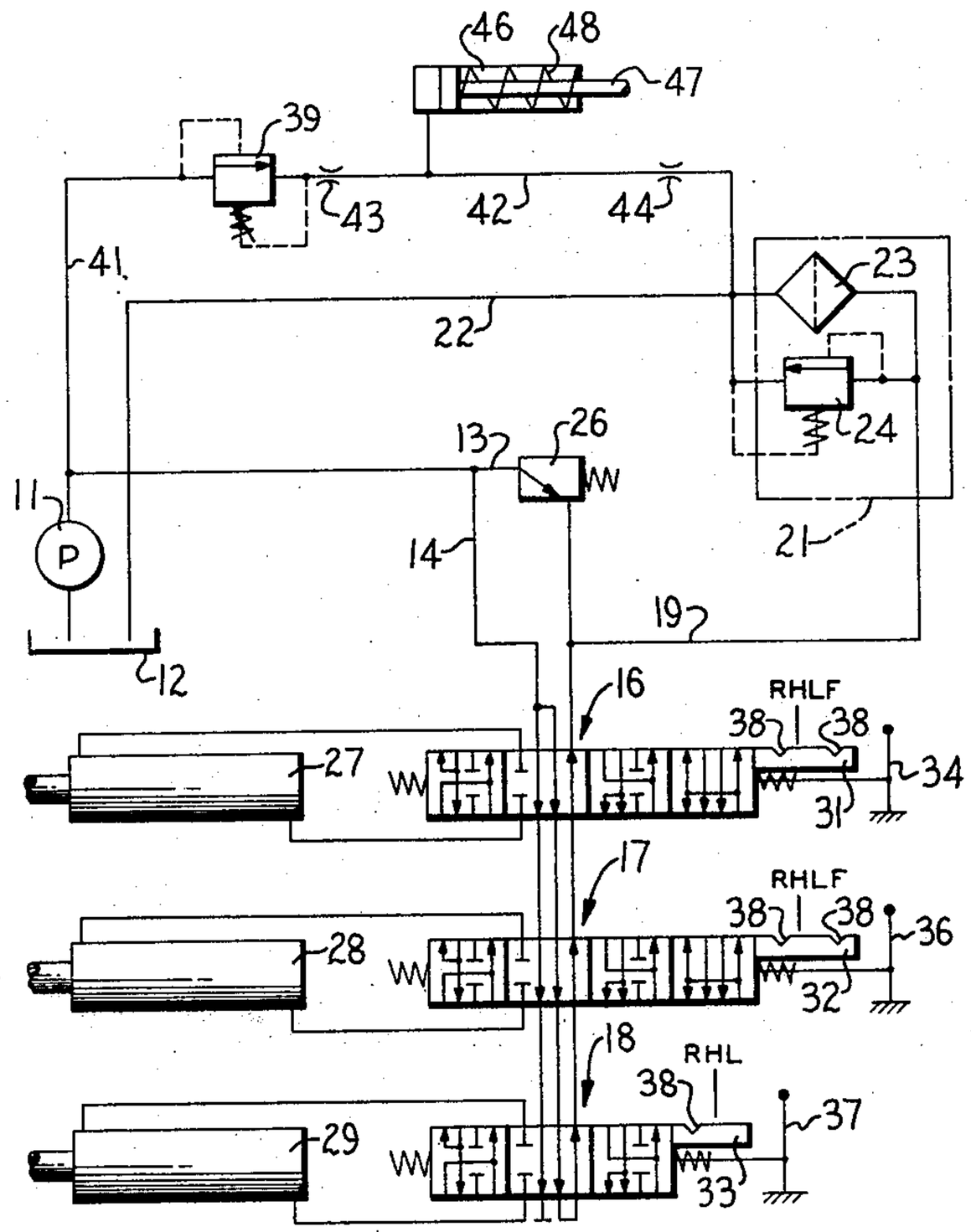

Fig. 1

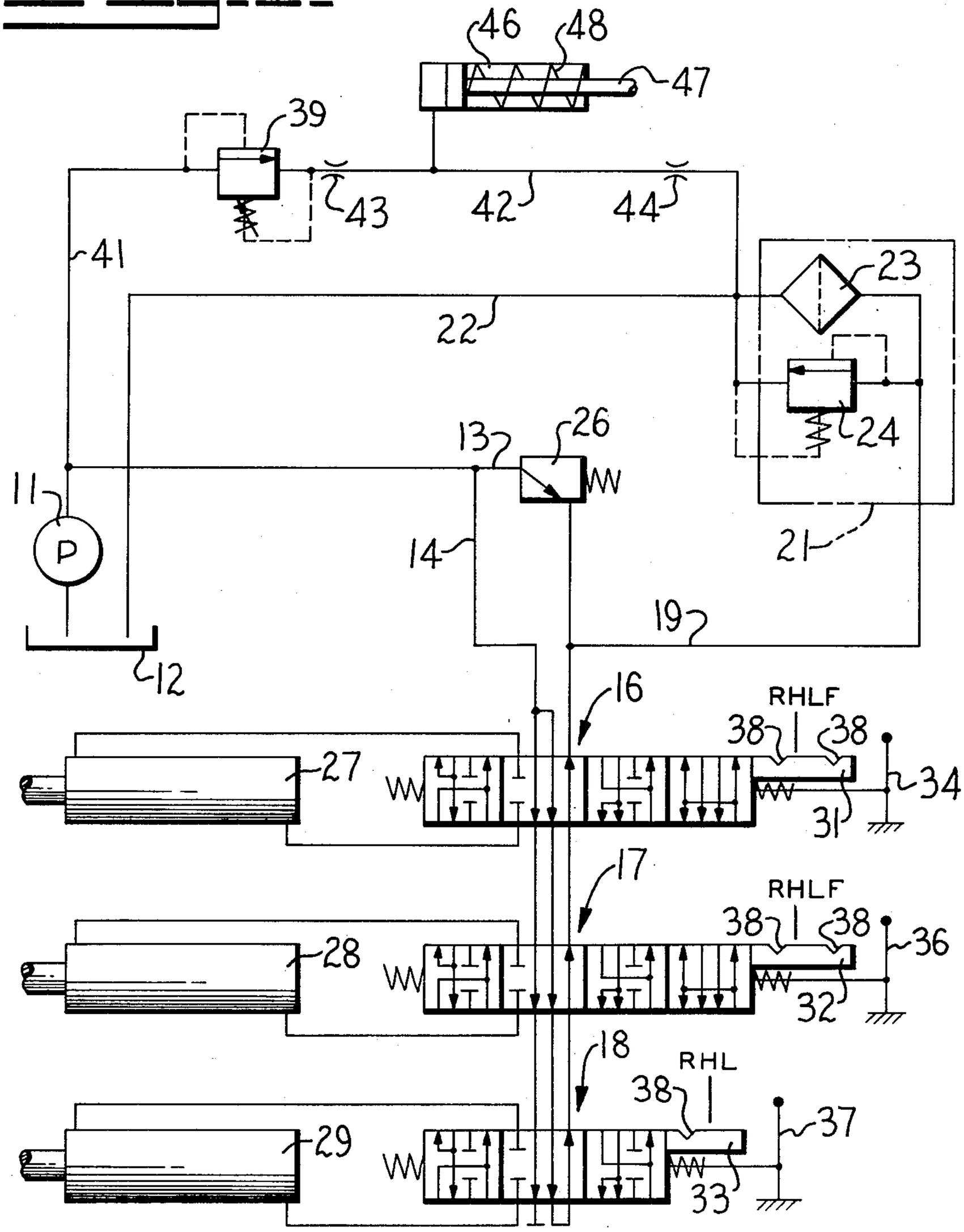

INVENTORS
LARRY G. HACKMANN
JAMES L. SCHMITT

BY
Fryer, Tjensvold, Feix, Phillips & Lempio
ATTORNEYS

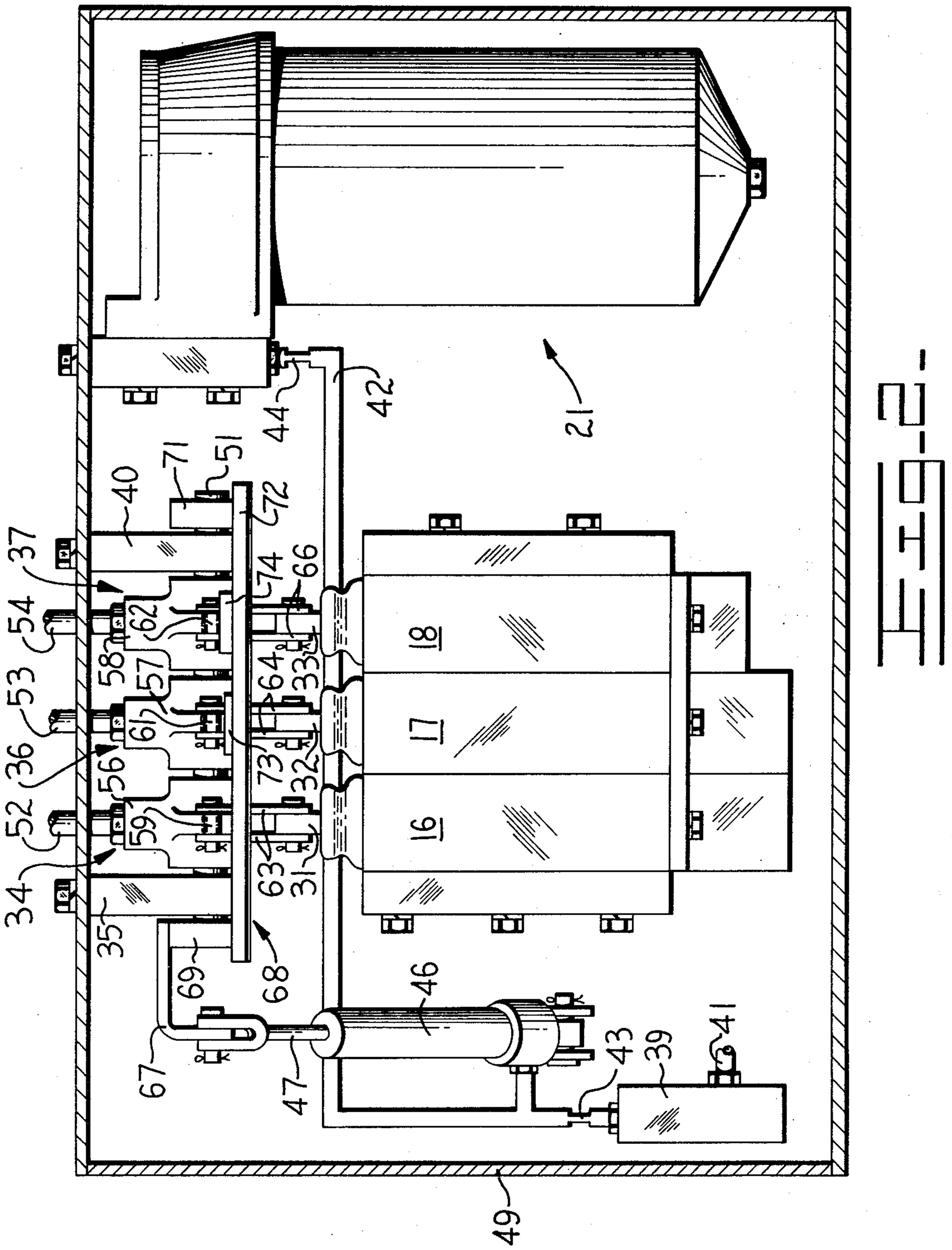

FIG-2-

INVENTORS
LARRY G. HACKMANN
JAMES L. SCHMITT

BY
Dreyer, Tjensvold, Fiss, Phillips & Lempio
ATTORNEYS

FIG. 3

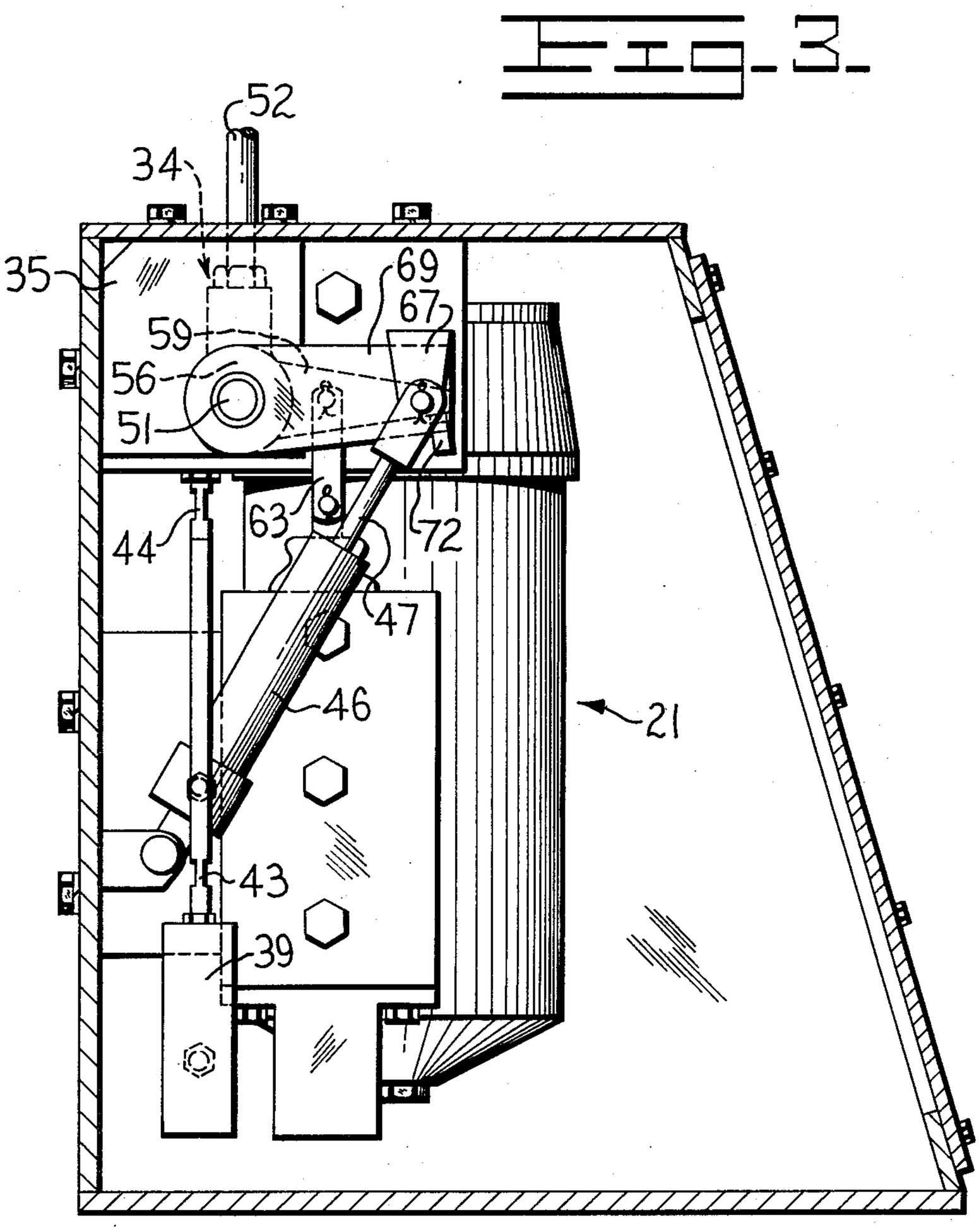

INVENTORS
LARRY G. HACKMANN
JAMES L. SCHMITT

BY
Fryer, Tjensvold, Feix, Phillips & Lempio
ATTORNEYS

COMBINED HYDRAULIC AND MECHANICAL DETENT DISENGAGING MEANS

BACKGROUND OF THE INVENTION

In various earth-moving special application machines and the like equipped with hydraulically actuated work implements it is desirable that the production cost be kept at an absolute minimum in order that such machines may be made economically available to small or individual consumers. In order to facilitate convenient control of the functions of the various work implements, lever operated control valves are generally associated with the hydraulic actuating cylinders thereof to control the flow of pressurized hydraulic fluid thereto in accordance with lever manipulation by the operator. Each valve is typically of the multiple position spool variety wherein the spool is translatable by lever action between raise, neutral, and lower positions, and oftentimes a float position.

The spools are generally detented in at least the raise position in order that the operator does not have to hold the levers in position until such time as the associated actuating cylinders complete their raise strokes. However, for purposes of operational efficiency it is desirable that the spools be automatically released to their neutral positions when the raise strokes are completed without necessitating lever manipulation by the operator.

Heretofore, automatic hydraulic kick-out circuitry and mechanism for this purpose have been relatively complicated and costly to manufacture, thereby seriously detracting from the desired overall minimum production cost of the machine.

SUMMARY OF THE INVENTION

The general object of the present invention is to provide a relatively simple and low cost kick-out system for automatically disengaging a detented spool of a hydraulic control valve and returning same to a neutral position responsive to the completion of a predetermined stroke of a work implement hydraulic actuating cylinder controlled by the valve.

As an advantageous feature of the system, when same is employed in a multiple control valve arrangement, actuated valves are released to neutral positions in a sequential order with a low kick-out force which can be overridden by the operator when desired.

In the accomplishment of the foregoing and other objects and advantages, detent disengaging means in accordance with the present invention generally include in combination with a source of pressurized fluid and multiple control valve means coupling the source to work implement actuating hydraulic cylinders, pressure sensitive kick-out mechanism and circuitry coupled to the source to actuate a hydraulic kick-out cylinder when system pressure exceeds a predetermined value corresponding to that at the ends of the strokes of the implement actuating cylinders, and means coupled to the kick-out cylinder for releasing spools of the control valve means from a detented position to a neutral position in a sequential order with a low kick-out force responsive to actuation of the kick-out cylinder.

BRIEF DESCRIPTION OF THE DRAWINGS

FIG. **1** is a schematic hydraulic circuit diagram of a detent disengaging system in accordance with the present invention.

FIG. **2** is a front elevational view of mechanical components of the system.

FIG. **3** is a side elevational view of the mechanical components.

DETAILED DESCRIPTION OF A PREFERRED EMBODIMENT OF THE INVENTION

Referring now to FIG. **1** in detail, there is shown a source of pressurized hydraulic fluid such as a pump **11** communicated with a reservoir **12**. The pump delivers fluid to a line **13** and a line **14** which in turn communicates with a group of implement control valves **16, 17** and **18** connected together in a series relationship.

A return line **19** from the valves is communicably connected to a filter assembly **21**, which is communicably connected to the reservoir by means of a line **22**. The filter assembly is of conventional design and includes a filter element **23** and bypass valve **24**.

A relief valve **26** is coupled between supply line **13** and return line **19** to protect the valves and associated hydraulic components subsequently described from over pressures.

The valves **16, 17** and **18** are respectively coupled in controlling relation to work implement actuating hydraulic cylinders **27, 28** and **29**. The valves **16, 17** and **18** are of the multiple position spool actuated type, and consequently respectively include spools **31, 32** and **33** which are selectively translatable between a plurality of flow control positions.

More particularly, in the illustrated case valves **16** and **17** have raise (R), neutral (H), lower (L), and float (F) spool positions, while valve **18** has raise (R), neutral (H) and lower (L) spool positions. In the neutral positions of the valves, the supply line **14** is communicated with return line **19** and communication to the opposite ends of the implement actuating cylinders **27, 28** and **29** is blocked.

When the spool of a valve is shifted to its raise position, flow is established from supply line **14** to the left end of the corresponding actuating cylinder (as viewed in FIG. **1**) and flow is established from the right end of the cylinder to return line **19**, thereby causing the piston rod of the cylinder to undergo a raise or retraction stroke.

Conversely, in the lower position of each valve, flow is established from supply line **14** to the right end of the corresponding cylinder while flow is established from the left end of the cylinder to return line **19**, thereby causing the piston rod of the cylinder to undergo a lower or extension stroke. In the float position of valve **16** or **17**, flow is established between the supply and return lines **14** and **19** and between both ends of the corresponding cylinders and the return line.

Translation of the spools **31, 32** and **33** of valves **16, 17** and **18** between the various positions thereof is facilitated by means of levers **34, 36** and **37** mechanically coupled thereto. In addition the spools are detented in their raise positions and spools **31** and **32** are also detented in their float positions, as schematically depicted by notches **38**. Such detenting of the valve

positions is accomplished in a conventional manner as by means of spring-loaded ball and groove combinations (not shown). Thus, by manipulating the levers, the valve spools are shifted from position to position, and are resiliently releasably retained in the raise and float positions by means of the detents.

Release of the valve spools from the detented float positions is accomplishable manually by exertion of sufficient force on the levers to override the detents. Release of the spools from their detented raise positions may be similarly manually effected. However, in the interest of operational efficiency it is desirable that the spools be automatically released from their detented raise position to neutral position when the associated implement actuating cylinders complete their raise or retraction strokes.

To the foregoing end, the present invention provides a relatively simple, low cost detent disengaging kick-out system which is now described in detail. The kick-out circuitry employed to release the control valve spools from their raise detent positions comprises a relief valve **39** connected to pump **11** by means of a line **41** and connected to return line **22** by means of a line **42**. Line **42** contains a pair of spaced-apart orifices **43** and **44**, and a hydraulic kick-out cylinder **46** is coupled to a point of the line intermediate the orifices. The piston rod **47** of the kick-out cylinder is resiliently loaded to a normal retracted position by means of a spring **48**, and is extended from normal position in response to the delivery of pressurized fluid thereto.

Orifice **43** restricts the flow of fluid to cylinder **46** such that the extension movement of the rod at kick-out is not violent. Such orifice also serves to drop the pressure under dynamic conditions such that in the event of failure of vale **39**, high pressure fluid does not reach the pilot lines and flow is restricted with a line failure in the pilot system beyond the orifice.

Orifice **44** restricts the flow of fluid back to the main system, and also serves to permit fluid to flow from cylinder **46** back to return line **22** after valve **39** shuts off. The combination of orifice **43** upstream of cylinder **46** and orifice **44** downstream therefrom cause pressure fluid to flow to the cylinder at a rate governed by the sizes of the orifices. The combination generates a pressure to activate the kick-out cylinder when the pressure setting of relief valve **39** is reached. Such valve is set to operate at a pressure level somewhat below the pressure level of the system relief valve **26**. For example, if the system relief valve is set at 2,000 psi, relief valve **39** is set at a value of approximately 1,750 psi.

The trip pressure level of relief valve **39** is reached when all energized ones of the implement actuating cylinders **27**, **28** and **29** reach the ends of their raise strokes, the system pressure building up at this time. In other words, the trip pressure level of valve **39** is set to substantially correspond to the actuating cylinder pressure existing at the end of their raise strokes, at which time the kick-out cylinder is responsively actuated.

It is to be noted, however, that since valves **16**, **17** and **18** are connected in series, if more than one actuating cylinder is being retracted, then both, or all three cylinders must reach the ends of their strokes before pressure is built up sufficiently in line **41** to open valve **39** and actuate the kick-out cylinder.

In order to release the control valves **16**, **17** and **18** from their detented raise positions responsive to actuation of kick-out cylinder **46**, the rod **47** of the latter is coupled to the valve spools **31**, **32** and **33** in the manner illustrated in FIGS. **2** and **3**. More particularly, the control valves are mounted within a housing **49** with the upper ends of the spools **31**, **32** and **33** projecting upwardly.

The levers **34**, **36** and **37** are pivotal about a transverse shaft **51** mounted by means of blocks **35** and **40** within the housing in overlying relation to the control valves. The levers include operating shafts **52**, **53**, and **54** projecting upwardly through slots in the top wall of the housing from bell cranks **56**, **57** and **58** pivotal about shaft **51** and having crank arms **59**, **61** and **62** overlying spools **31**, **32** and **33**. Crank arms **59**, **61** and **62** are connected to the spools **31**, **32** and **33** by means of depending links **63**, **64** and **66** pivotally connected at one end to intermediate points of the crank arms and at the other end to the projecting ends of the spools. Thus, responsive to movement of the operating knobs, the cranks are pivoted to in turn effect translation of the spools to their various positions through the interconnecting links.

The kick-out cylinder **46** is also mounted within the housing **49** and the rod **47** thereof is pivotally connected to an arm **67** in turn rigidly secured to a bail **68**. The opposite sides **69** and **71** of the bail are pivotal about shaft **51**, and the interconnecting web **72** of the bail underlies the projecting tips of crank arms **59**, **61** and **62** so as to be engageable therewith when the bail is upwardly pivoted.

The arm **67** is secured to one side **69** of the bail at a position displaced from its pivot point about shaft **51**, whereby extension of rod **47** of the kick-out cylinder effects the above-noted upward pivotal movement of the bail into engagement with the crank arms **59**, **61** and **62**. Thus, when the kick-out cylinder **46** is actuated in the manner previously described due to the system pressure existing when all energized ones of the actuating cylinders **27**, **28** and **29** have completed a raise stroke, the bail engages the crank arms associated with those valves having their spools in the detented raise position to thereby pivot the arms upwardly and translate the spools to their neutral positions.

It is important to note that the bail **68** is arranged to contact the projecting tips of the crank arms in sequence. More particularly, as best shown in FIG. **2**, the web **72** of the bail is provided with blocks **73** and **74** of varied thickness positioned to engage the crank arms **61** and **62** of the operating levers **36** and **37** coupled to the spools of control valves **17** and **18**. All levers and control valves are depicted in FIG. **2** as being in their detented raise positions at which time the thickest block **74** contacts crank arm **62**, the block **73** is spaced from crank arm **61**, and the surface of the bail web **72** is further spaced from crank arm **59**. Thus, when the kick-out mechanism is actuated to pivot the bail upwardly, block **74** pivots crank arm **62** upwardly, then block **73** contacts crank arm **61** to pivot same upwardly, and finally the surface of the web contacts crank arm **59** to pivot same upwardly.

In this manner the control valves are released from their detented raise positions to their neutral positions in a sequential order. As a result, the kick-out cylinder

46, when extending, works against only one detent at a time, thus preventing the cylinder from being overloaded and allowing the operator to override the kick-out mechanism when he must operate an implement actuating cylinder at or very near to the setting of the main relief valve 26.

It will be appreciated that when the control valves have been released to their neutral positions, fluid flow is directly from the supply line to the return line such that the system pressure drops and valve 39 is returned to its closed position. Spring 48 then returns rod 47 of kick-out cylinder 46 to its normal retracted position preparatory to initiation of a subsequent kick-out cycle of operation.

Although the invention has been hereinbefore described and illustrated in the accompanying drawings with respect to a single preferred embodiment, it will be appreciated that numerous modifications and changes may be made therein without departing from the true spirit and scope of the invention, and thus it is not intended to limit the invention except by the terms of the appended claims.

What is claimed is:

1. In a hydraulic circuit including a source of pressurized hydraulic fluid, a plurality of work implement actuating hydraulic cylinders, and a plurality of implement control valves serially connected between said source and a return line and correspondingly coupled in controlling relation to said cylinders, each of said valves having a spool selectively translatable between a plurality of flow control positions including an implement actuation position and a neutral position, said spool in said implement actuation position communicating opposite ends of the corresponding one of said cylinders to said source and said return line to effect a stroke of said cylinder, said spool in said neutral position communicating said source with said return line and blocking communication to the opposite ends of the corresponding one of said cylinders, said valves including means detenting said spools in said implement actuation positions thereof, an improved detent disengaging system comprising pressure sensitive valve means coupled between said source and a second return line communicated with said first return line, said pressure sensitive valve means being arranged to communicate said source with said second return line in response to a predetermined pressure substantially corresponding to that existing when said cylinders have completed an implement actuation stroke, a hydraulic kick-out cylinder communicably connected to said second return line for actuation responsive to the establishment of communication between said source and said second return line by said pressure sensitive valve means, and mechanical linkage means coupling said kick-out cylinder to said spools of said control valves for translating same from said implement actuation positions to said neutral positions thereof responsive to actuation of said kick-out cylinder.

2. The combination of claim 1, further defined by said second return line containing a pair of spaced-apart orifices, said kick-out cylinder being communicably connected to said second return line at a point intermediate said orifices.

3. The combination of claim 1, further defined by said linkage means comprising a plurality of bell cranks pivotal about a fixed shaft, each bell crank having an operating lever and crank arm projecting therefrom, a plurality of links correspondingly coupling said arms of said cranks to said spools for translating said spools between said positions thereof responsive to pivotal movement of said cranks, said cranks having implement actuation and neutral pivotal positions corresponding to said implement actuation and neutral positions of said spools, and a bail pivotally mounted on said shaft and engageable with said crank arms upon pivotal movement of the bail to pivot said cranks from said implement actuation to said neutral positions thereof, said piston rod of said kick-out cylinder coupled to said bail to effect said pivotal movement thereof responsive to actuation of said kick-out cylinder.

4. The combination of claim 3, further defined by said second return line containing a pair of spaced-apart orifices, said kick-out cylinder being communicably connected to said second return line at a point intermediate said orifices.

5. The combination of claim 3, further defined by said bail having staggered contact points for engaging said crank arms in sequence.

6. The combination of claim 5, further defined by said pressure sensitive valve means comprising a relief valve, and said second return line containing a pair of spaced-apart orifices, said kick-out cylinder being communicably connected to said second return line at a point intermediate said orifices.

7. The combination of claim 5, further defined by said bail having a plurality of blocks of varied thickness defining said staggered contact points.

8. The combination of claim 3, further defined by said bail having opposite sides pivotal about said shaft and an interconnecting web, an arm pivotally connected to said piston rod of said kick-out cylinder and rigidly secured to one side of said bail at a point displaced from the pivot axis thereof about said shaft, and a plurality of blocks of varied thickness carried by said web for engaging said crank arms in sequence upon said pivotal movement of said bail.

9. The combination of claim 8, further defined by said pressure sensitive valve means comprising a relief valve, and said second return line containing a pair of spaced-apart orifices, said kick-out cylinder being communicably connected to said second return line at a point intermediate said orifices.

* * * * *