United States Patent

Stine

[15] **3,679,110**

[45] **July 25, 1972**

[54] CUTTER-TYPE BOX FOR DISPENSING PACKAGING FILM WITH PROTECTIVE MOUNTING FOR THE CUTTER

[72] Inventor: **Orrin Burr Stine,** New York, N.Y.

[73] Assignee: **Borden Inc.,** New York, N.Y.

[22] Filed: **June 25, 1970**

[21] Appl. No.: **49,870**

[52] **U.S. Cl.**.....**225/47,** 225/90

[51] **Int. Cl.**.....**B26f 3/02**

[58] **Field of Search**.....225/89, 46, 47, 48, 54, 46, 225/53

[56] **References Cited**

UNITED STATES PATENTS

3,144,970	8/1964	Beschmann	225/48 X
1,521,369	12/1924	Hamersley	225/47
1,978,154	10/1934	Benson	225/48
3,565,307	2/1971	Wiley et al.	225/47

Primary Examiner—Andrew R. Juhasz
Assistant Examiner—Leon Gilden
Attorney—George P. Maskas, Edward L. Mandell and George A. Kap

[57] **ABSTRACT**

A cutter-type box for dispensing packaging film includes means such as a separate insert for rotatably supporting a roll of the film within an enclosure defined by a rectangular box container which has a closeable cover flap or panel. This film in the enclosure is fed outwardly through a transverse slit defined in the top cover for delivery over an edge at which a cutter is arranged. The cutter is supported on a panel or flap with a foldable portion permitting the cutter to be oriented either upright to project above the surface of the top cover when the cover is in a closed position or downwardly so as to be maintained within the enclosure and protected by the cover from damage during shipment.

6 Claims, 4 Drawing Figures

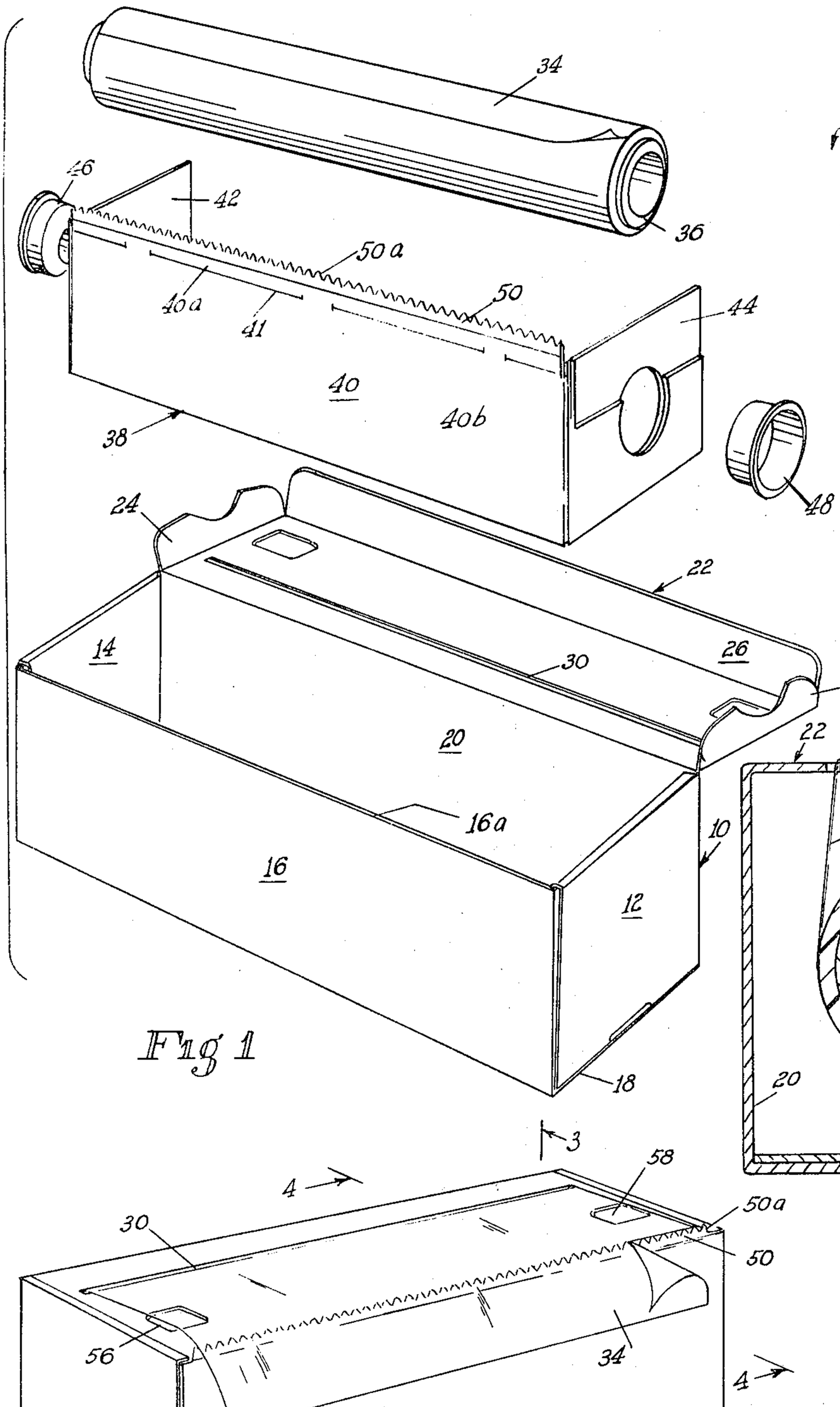

Fig 1

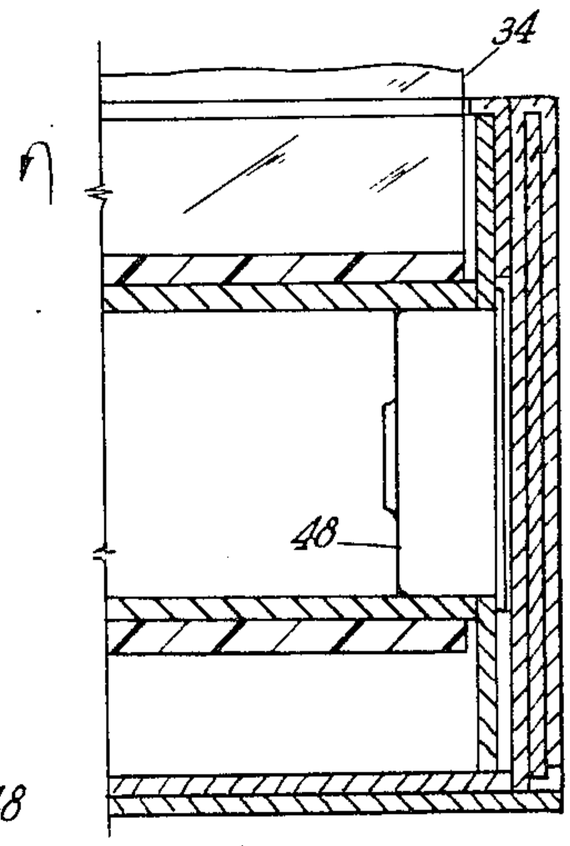

Fig 3

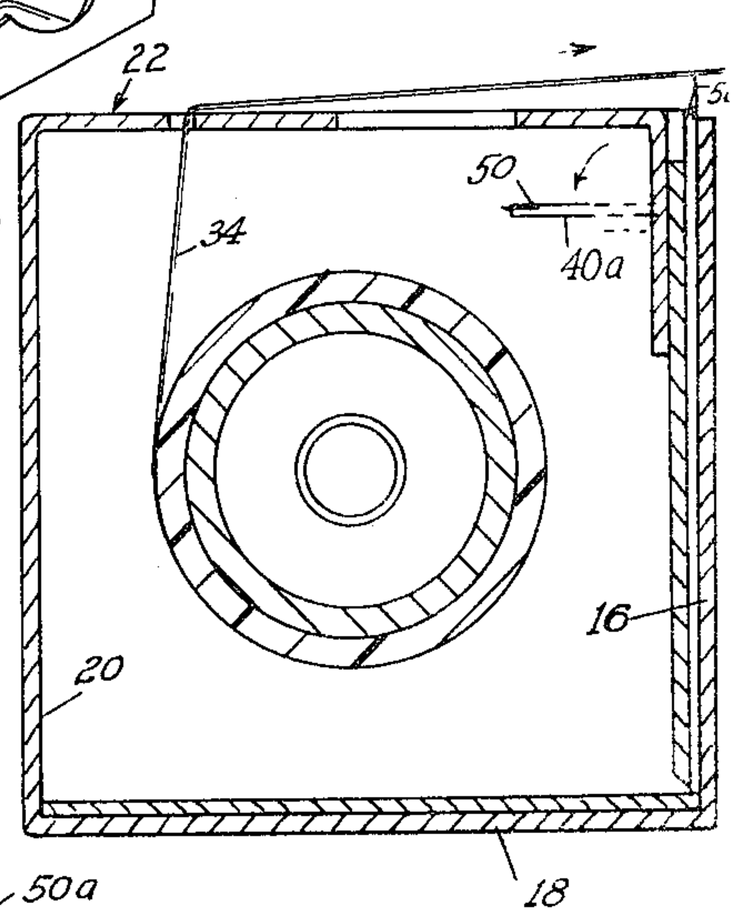

Fig 4

Fig 2

CUTTER-TYPE BOX FOR DISPENSING PACKAGING FILM WITH PROTECTIVE MOUNTING FOR THE CUTTER

SUMMARY OF THE INVENTION

This invention relates in general to the construction of containers or cartons and, in particular, to a new and useful container of the cutter-type which includes a cutter edge mounted in the vicinity of the front of the container and which may be oriented upwardly in a position to cut strip material which is fed from the container through a slit defined in the cover thereof or it may be oriented so as to be enclosed by the cover and protected by it.

Most cutter edge dispenser boxes or cutter-type boxes on the market fall into two categories. In the first category, the cutter edge is protected during shipment but the user must then place it in its functioning position before the cutter edge can be utilized. This is inconvenient for the user and is frequently the cause of minor injuries. In the second category, the box is shipped with the cutter edge in place but the protruding edge is subject to damage in transit.

In accordance with the present invention, there is provided an improved mounting for a cutter of a cutter-type carton which includes means for shifting the cutter knife between an upright position at which it is oriented to project above the top cover of the carton or to a retracted position at which it may be accommodated within the carton and protected by the closing of the cover.

In the preferred arrangement, this is accomplished by providing a panel upon which the cutter is mounted which includes a foldable upper portion. When the cutter is to be protected, such as during the shipment of the container, it is folded downwardly and contained within the container where it is protected by the cover. In the operative position, it is folded so as to extend substantially vertically upwardly and project above the top of the front panel of the box. It is held and reinforced in this upward position by the closing of the cover behind the fold line of the panel carrying the cutter.

Accordingly, it is an object of the invention to provide a cutter-type container or box construction which includes a cutter arranged adjacent the top of the front panel edge of the container and which is mounted so as to be selectively oriented to project above the top of the cover in a position for cutting the strip material contained in the container or to be oriented within the container at a position at which it is protected for shipment.

A further object of the invention is to provide a cutter-type box which is simple in design, rugged in construction and economical to manufacture.

The various features of novelty which characterize the invention are pointed out with particularity in the claims annexed to and forming a part of this specification. For a better understanding of the invention, its operating advantages and specific objects attained by its use, reference should be had to the accompanying drawings and descriptive matter in which there is illustrated and described a preferred embodiment of the invention.

In the drawings:

FIG. **1** is an exploded perspective view of a container with a film reel supporting insert constructed in accordance with the invention;

FIG. **2** is an assembled front perspective view of the container indicated in FIG. **1**;

FIG. **3** is a section taken along the line **3—3** of FIG. **2**; and

FIG. **4** is a section taken along the line **4—4** of FIG. **2**.

GENERAL DESCRIPTION OF THE PREFERRED EMBODIMENT

Referring to the drawings in particular, the invention embodied therein comprises a cutter-type box or container generally designated **10** which is of rectangular configuration and which includes: two vertical rectangular side panels **12** and **14** which are formed as double walled reinforced panels, a

front panel **16**, a bottom panel **18**, a vertical rear wall panel **20** and a top cover generally designated **22** which includes tuck-in flaps **24** and **26**. The top panel or cover **22** is provided with a transversely extending slot **30** through which a length of film material **34** is fed from a reel or roll thereof **36**.

A roll-supporting insert generally designated **38** includes a front panel portion **40** and two side panel portions **42** and **44** having openings for receiving journal elements **46** and **48** for rotatably supporting the reel **36**.

The roll-supporting insert **38** is adapted to be positioned within the enclosure defined by the substantially rectangular container **10**. In accordance with the invention, a cutter or knife **50** is carried on and extends completely across the top edge of the front panel **40** of the insert **38** and it is supported, when the insert **38** is within the container, at a level which is slightly above the level of a top edge **16*a*** of the front panel. In the closed condition of the cover **22** the front flap **26** bears behind fold lines or score lines **41** of the panel **40** and supports the cutter **50** with its cutting edge **50*a*** oriented vertically upwardly at a location above the top surface of the cover. The film material **34** which is fed from the reel **36** is directed through the slot **30** and over the forward portion of the top surface of the cover **22** and over the edge **50*a*** of the cutter **50** to permit it to be torn away along the edge as indicated in FIG. **2**. The closed cover **22** holds the cutter in a rigid vertical position for the cutting operation.

In order to provide means for protecting the cover during shipment, the invention includes a top panel portion **40*a*** which is bendable about the score line **41** from the bottom panel portion **40*b*** in order to orient the panel portion **40*a*** substantially horizontally as indicated in FIG. **4** and to position the cutter **50** within the enclosure of the container at a location where it may be protected by the cover **22** when it is closed as indicated in FIG. **4**. The arrangement permits the orientation of the cutter **50** in the position indicated in dotted lines in FIG. **4** when the container is to be shipped or stored. As soon as it is to be used, however, the cover is opened and the flap **40*a*** is bent upwardly and then the cover is again closed to provide a reinforcement for the panel **40*a*** along the score line **41**. The side flaps **24**, **24** are also of a length such that they reinforce and support the front flap **26**.

In the embodiment illustrated, the cover **22** is provided with additional openings, such as wide, short slots **56** and **58** which are provided to facilitate engagement of the strip material **34** especially when the strip material **34** comprises a thin, plastic material which has a tendency to cling or to crumple. The user merely depresses the material into the slots **56** and **58** in order to grasp the material.

What is claimed is:

1. A container for dispensing sheet material from a roller, comprising a generally block-shaped container body having a substantially rectangularly shaped flat, rear, bottom and two side walls forming an interior enclosure for receiving a roll of sheet material and a cover in association with said container; a cutter knife extending between said side walls and having an outer cutter edge; and means supporting said cutter knife adjacent said front wall for orienting said cutter edge upwardly at a location at which it projects above the top of said cover and for orienting said cutter edge in a retracted position at which it extends into the enclosure of said container to permit it to be enclosed by said cover wherein said means supporting said cutter includes a panel member having a bottom panel portion adapted to extend between said side walls and a top panel portion hinged to said bottom portion carrying said cutter at its upper end and adapted to be folded downwardly in respect to said bottom panel portion.

2. A container, according to claim **1**, wherein said cover is hingedly connected to the top of the rear wall and being foldable about its hinged connection to said rear top wall to close said enclosure.

3. A container, according to claim **1**, wherein said panel member comprises a portion of roll-supporting insert, said roll-supporting insert including side portions supporting said

panel member and providing means for rotatably supporting a role of the strip material.

4. A container, according to claim 3, wherein said insert includes a single front panel and an end panel at each end of said front panel, said end end panels adapted to overlie the adjacent side panels of said container when said insert is positioned within said container.

5. V container, according to claim 1, wherein said cover includes a slot extending transversely therethrough between said side walls for the passage of the strip material from the enclosure of said container.

6. A container, according to claim 5, including et least one additional slot adjacent the sides of said cover for permitting depressing of the strip material therein to facilitate the grasping thereof.

* * * * *