United States Patent

Gosling

[15] **3,677,458**

[45] **July 18, 1972**

[54] END LOADING TWIN BEVERAGE CARTON

[72] Inventor: **Dickinson Gosling,** Victoria, British Columbia, Canada

[73] Assignee: **John Labatt Limited,** London, Ontario, Canada

[22] Filed: **April 2, 1970**

[21] Appl. No.: **25,086**

[52] **U.S. Cl.**.....**229/27,** 229/51 DB, 229/52

[51] **Int. Cl.**.....**B65d 5/46**

[58] **Field of Search**.....229/27, 51 DB, 52

[56] **References Cited**

UNITED STATES PATENTS

2,678,724	5/1954	Andriot, Jr.	229/27 X
2,975,934	3/1961	Powell	229/51 DB
3,343,746	9/1967	Shiffman	229/51 DB

Primary Examiner—Richard E. Aegerter
Assistant Examiner—Hadd S. Lane
Attorney—Christen and Sabol

[57] **ABSTRACT**

An end loading, twin carton separable into two cartons, embodying folded handles usable in the twin and also the separated mode. A blank for the carton is also disclosed.

9 Claims, 9 Drawing Figures

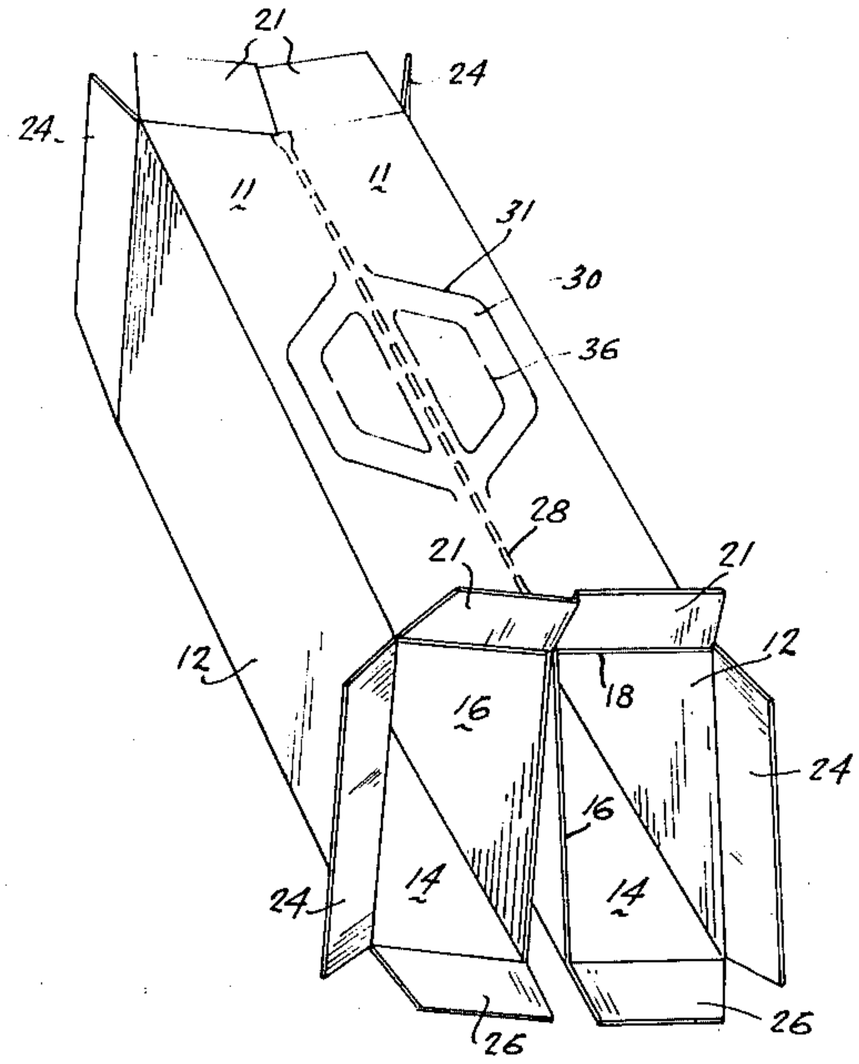

4 Sheets-Sheet 1

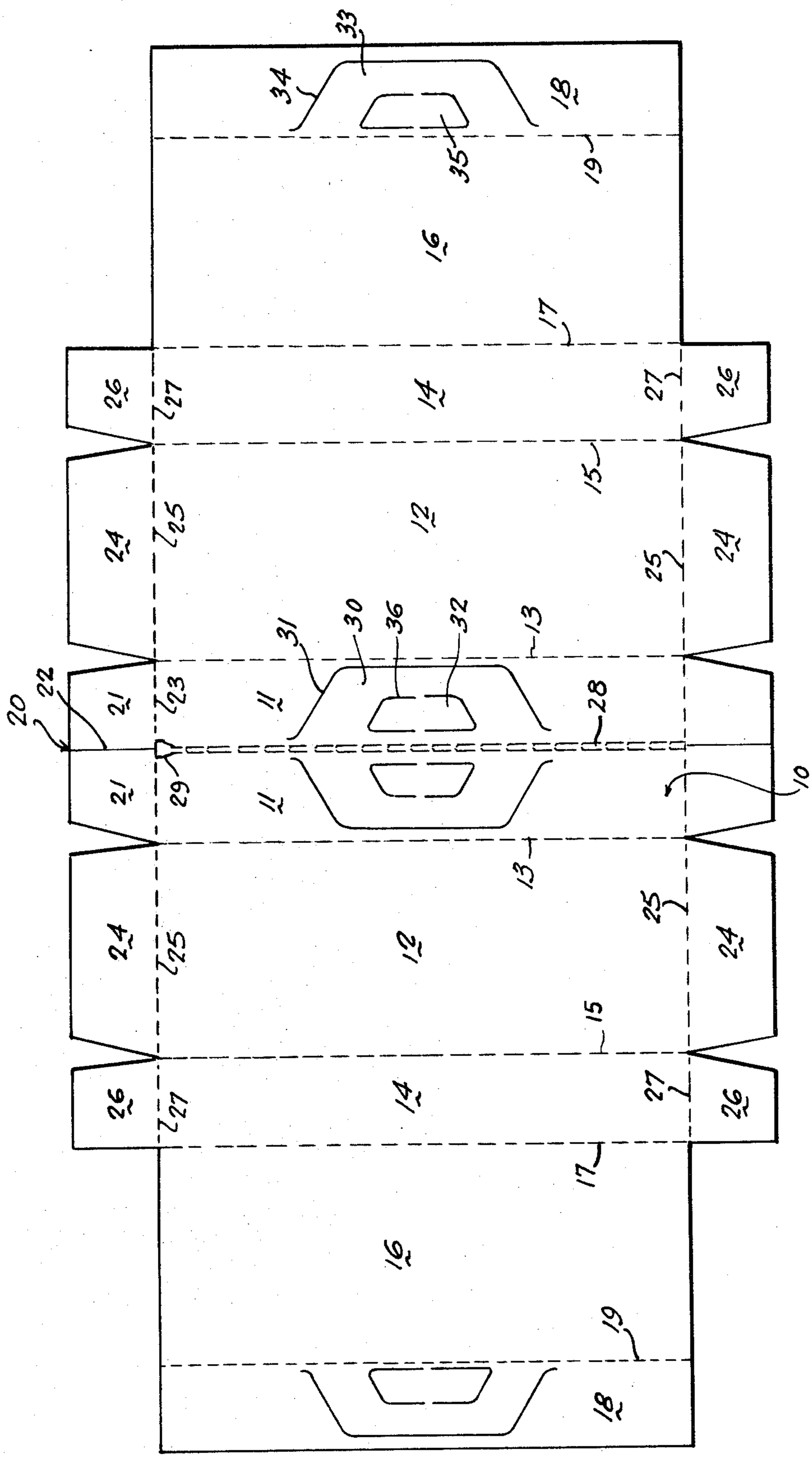

FIG. 1.

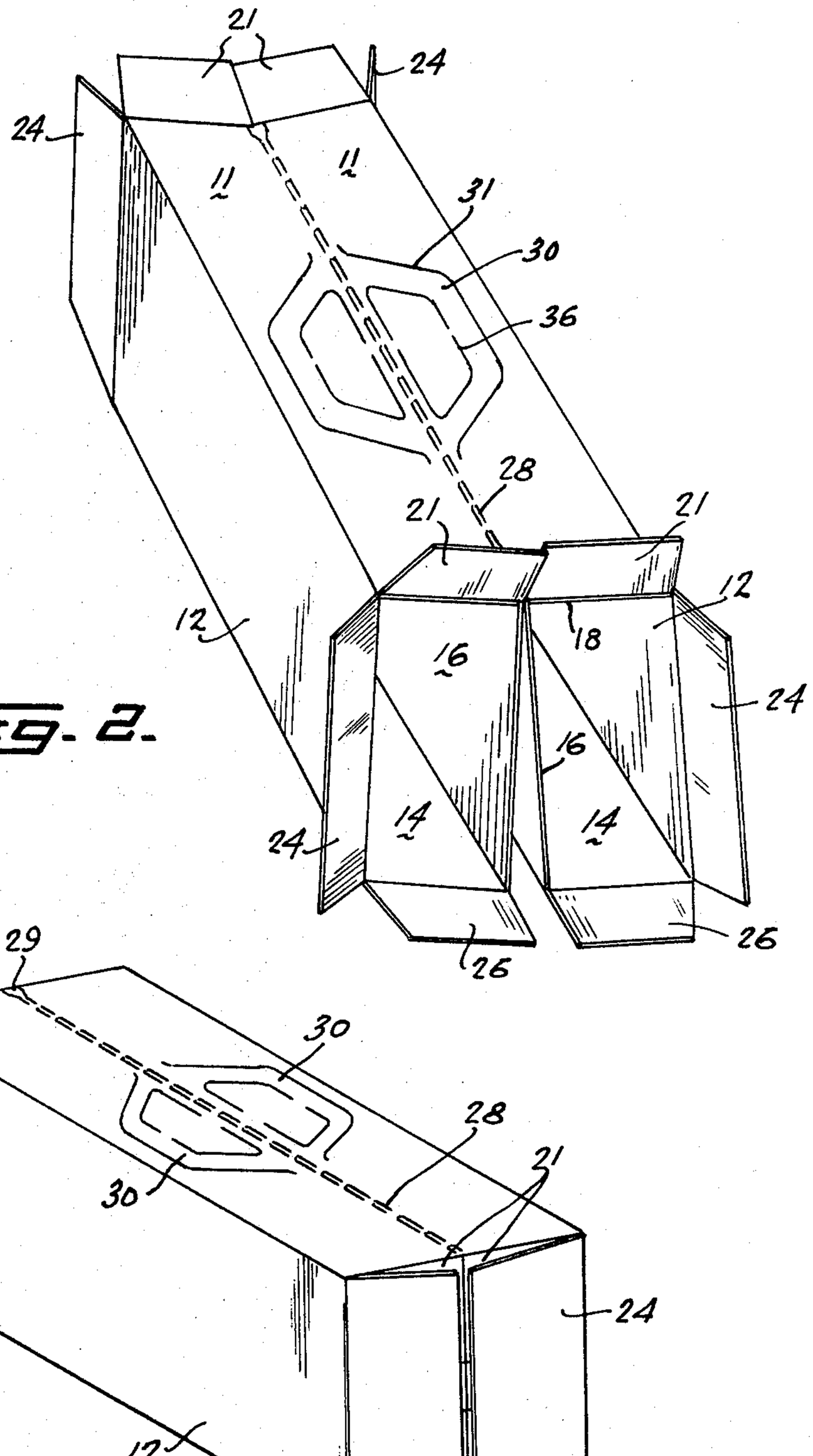
21
24
24
11
11
31
30
36
28
21
21
12
12
18
16
16
24
14
14
24
26
26

Fig. 2.

29
30
30
28
21
24
12
24
26

Fig. 3.

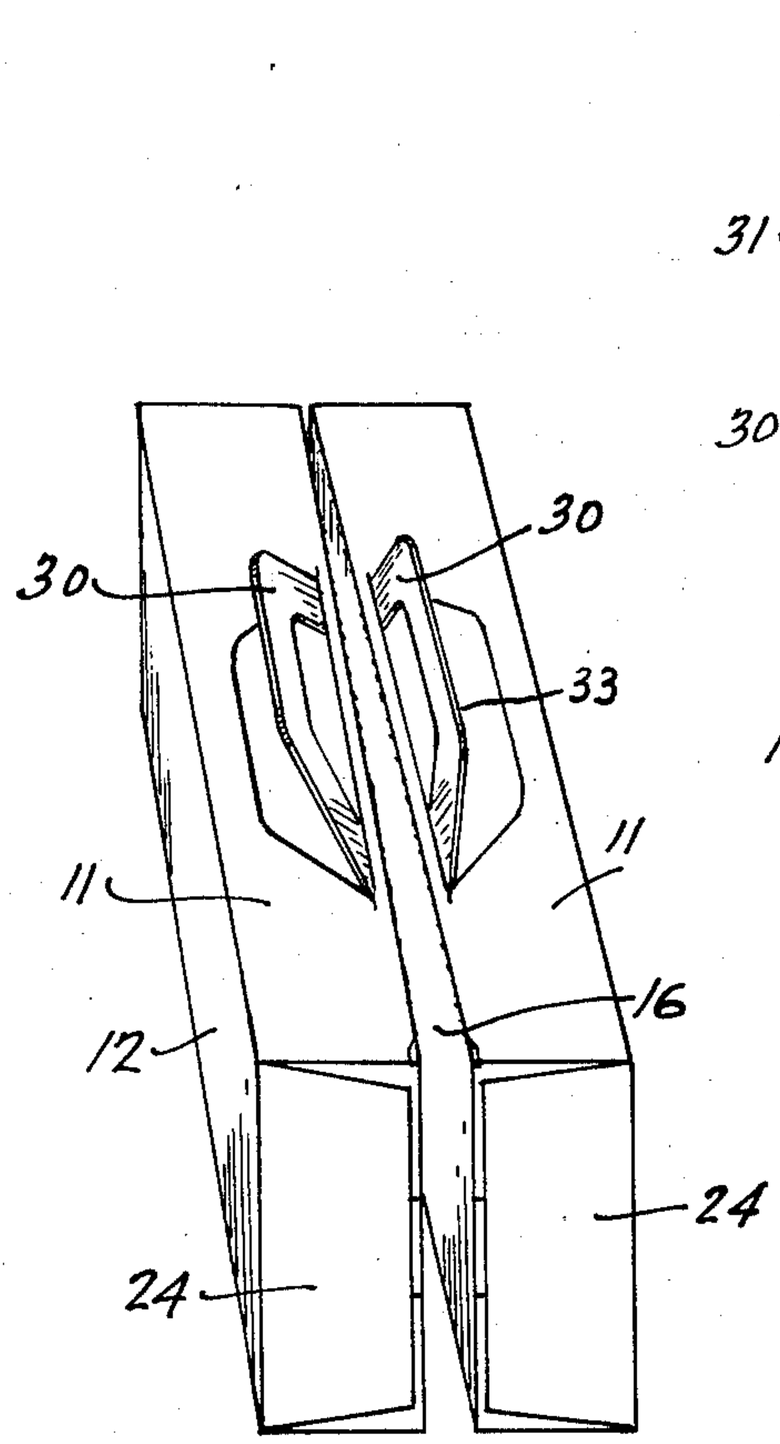

Fig. 6.

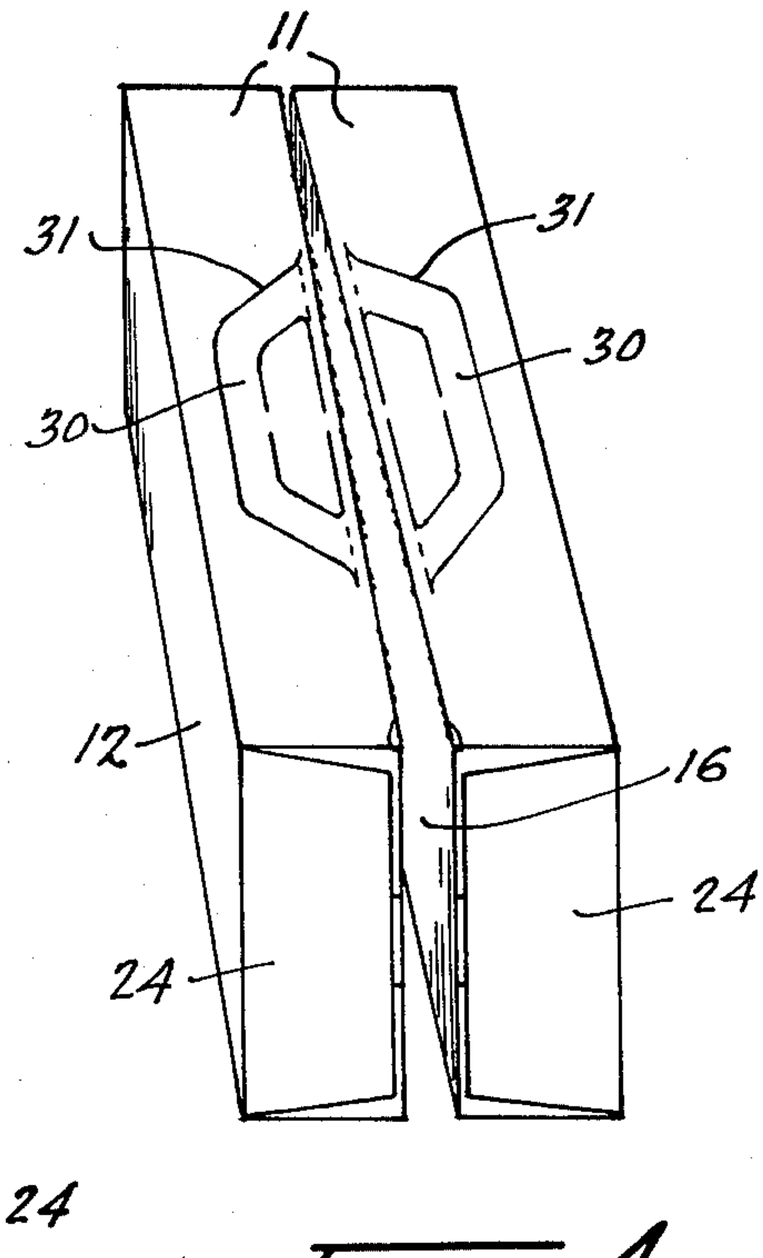

Fig. 4.

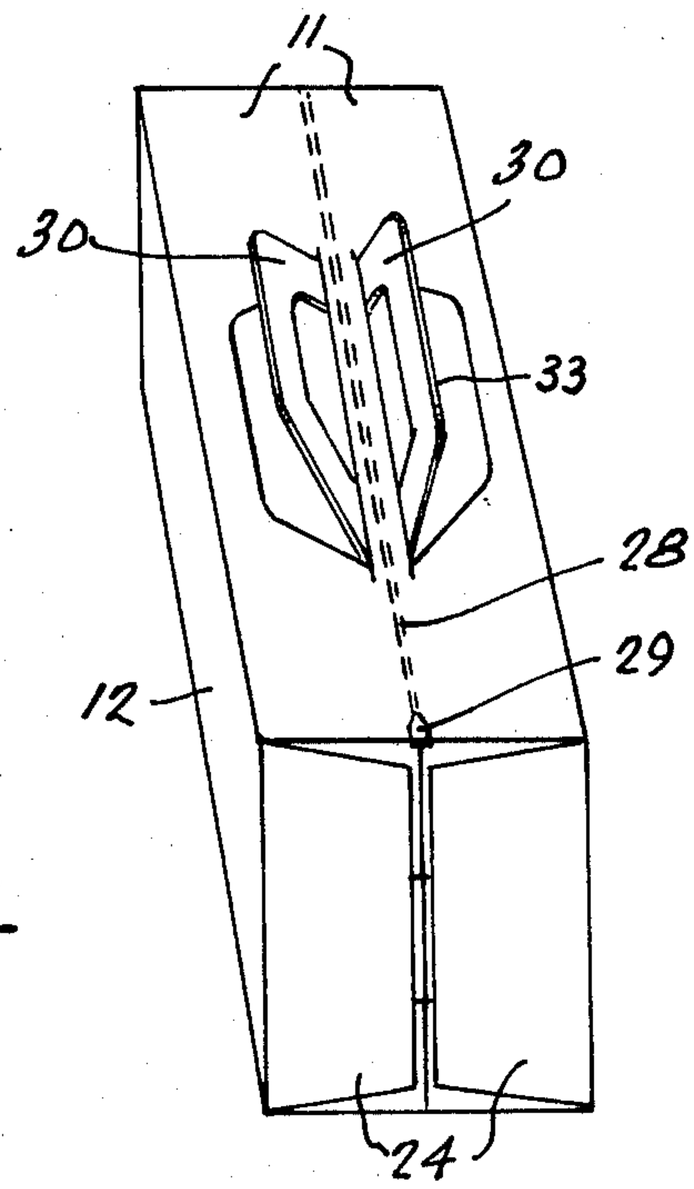

Fig. 5.

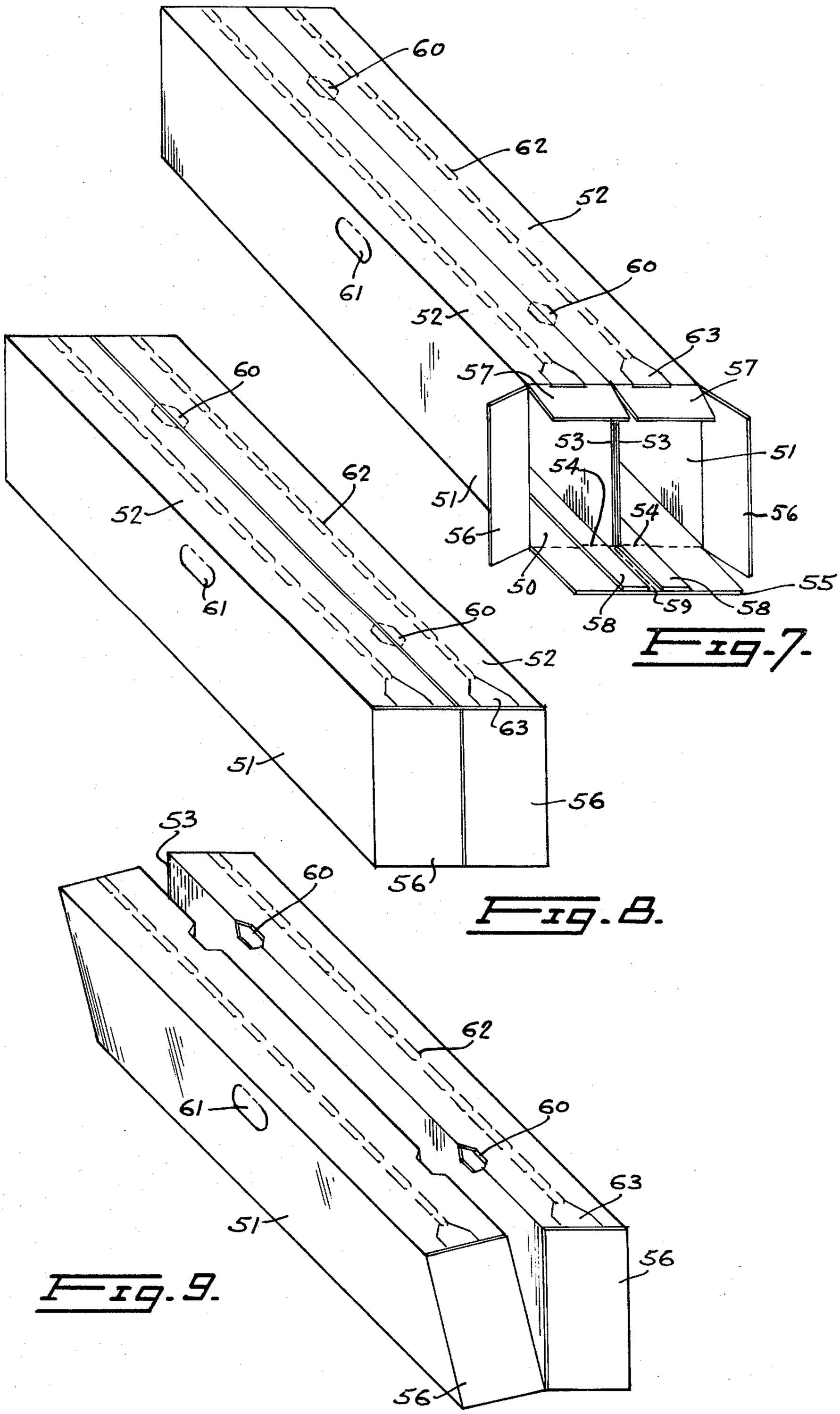

Fig. 7.

Fig. 8.

Fig. 9.

END LOADING TWIN BEVERAGE CARTON

This invention relates to an improvement in carrying containers and more particularly to an end loading, top opening twin carton which can be separated into two separate cartons, as well as to a blank for forming such carton.

There has been considerable interest in recent years in cartons for bottled beverages which are end-loading for filling with bottles and top opening for the removal of the bottles. Examples of such cartons can be found in Canadian Pat. No. 735,744 issued June 7, 1966, and Canadian Pat. No. 736,358 issued June 14, 1966.

There has also recently been a great interest in providing cartons for bottled or canned beverages which can be conveniently split into two sections. This means that, for example, it is no longer necessary to stock both six bottle and 12 bottle cartons since if a customer wants only a six bottle carton, a 12 bottle carton can be conveniently split in half. The splittable carton also has advantages for the consumer since he may not wish to carry with him at a particular time a full carton and under such circumstances he can carry a closed half carton.

If the carton is to be used for cans, the provision of a handle is not too important because of the compactness and light weight of the package. However, when the carton is intended for bottles it is desirable to provide an extendable handle that is adaptable to facilitate carrying both in the initial closed position of the carton and after the carton has been opened for removal and replacement of the bottles in the carton. When a splittable twin carton is being used, it is important that the handles be arranged such that there will be a handle for each section of the carton after separation.

Although cartons of this general type have been produced, they tend to be of a rather complex manufacture and require the use of excessive amounts of material, which add to the cost of packaging. Thus, there has been a need for a carton of simple construction and low manufacturing cost which will meet the above requirements.

The present invention provides an improved end loading, top opening, twin carton which is adapted to be separated into two cartons. Essentially the carton of the invention consists of a pair of article holding compartments joined to a common panel. Each of these compartments has an inner and outer vertical panel and a top and bottom panel as well as end closure panels. The common panel is foldably connected to the compartment outer vertical panels and overlies the compartment top or bottom panels. This common panel also includes at least one separable line of weakness in the region thereof overlying the two inner vertical panels of the compartment.

According to a preferred feature of the invention, the common panel has end flaps foldably connected thereto and each end flap is provided with a separable line of weakness in alignment with the line dividing the two inner vertical panels. These end flaps hold the two compartments firmly together while they are still joined by the common panel, but each flap will readily split along its line of weakness when the carton is being split into two sections.

When the carton of the invention is intended for carrying bottles, it is desirable to position the common panel at the top and to provide a pair of handle members formed in and integral with the common top panel. These handle members are positioned on either side of the separable line of weakness. Handle members are also preferably formed in and integral with the compartment top panels and are positioned such that each compartment top panel handle is in register with a corresponding handle member in the common top panel. These handle members are cut such that they are releasably held in the panels.

The separable line of weakness in the common panel is preferably in the form of a scored or perforated line and a single line can be used. According to a particularly preferred feature of the invention, when the common panel is at the top a pair of lines are provided in the form of a tear strip. This tear strip can include a tab at one end which can be easily and quickly grasped and pulled to divide the carton into two parts.

When the carton is intended for carrying cans, a single scored or perforated line of weakness can be provided in the common panel and the carton can be split apart by grasping the two compartments remote from the common panel and spreading them apart to break the common panel along the line of weakness. Finger slots can be formed in the panels remote from the common panel for ease of grasping. It is also convenient to provide finger slots in the outer vertical panels to serve as carrying handles.

It has been found to be particularly advantageous to place the common panel at the bottom when the carton is intended for cans. When the carton is used in this position, tear strips can be provided along the top panels remote from the common panel for opening the can holding compartments.

According to another feature of the invention, the carton can be formed from a blank cut from foldable sheet material.

The blank essentially comprises a centrally located common panel having extending laterally from each longitudinal edge thereof in sequence, an outer vertical panel, a first horizontal panel, an inner vertical panel and a second horizontal panel. The panels are integrally foldably inter-connected by fold lines extending along adjacent edges thereof and the common panel includes at least one separable line of weakness extending substantially along the longitudinal axis thereof. Preferably the blank includes integrally foldably inter-connected end panels and these end panels are preferably integrally, foldably connected to the common panel, the outer vertical panels and the bottom panels.

Certain preferred embodiments of the invention are illustrated in the accompanying drawings in which,

FIG. **1** is a plan view showing the inside face of a foldable blank from which a twin carton is formed,

FIG. **2** is a perspective view of the carton erected for loading bottles through an open end thereof,

FIG. **3** is a perspective view of the completely erected and sealed twin carton,

FIG. **4** is a perspective view of the carton after it has been split into two parts,

FIG. **5** is a perspective view of the complete twin carton with handles in extended position,

FIG. **6** is a perspective view of the split carton with extended handles,

FIG. **7** is a perspective view of a twin carton for cans erected for loading cans through an open end thereof,

FIG. **8** is a perspective view of the completely erected and sealed twin carton for cans, and

FIG. **9** is a perspective view of the twin carton for cans being split into two parts.

The carton blank shown in FIG. **1**, described in terms applicable to the container formed therefrom, includes a series of rectangular panels foldably connected by lines of scoring. Thus, common top panel **10** consists of two halves **11**, **11** and foldably connected thereto by scored lines **13,13** are two outer vertical panels **12,12**. The bottom panels **14,14** are foldably connected to panels **12,12** by score lines **15,15** and inner vertical panels **16,16** are in turn foldably connected to panels **14,14** by scored lines **17,17**. Finally, inner top panels **18,18** are foldably connected to panels **16,16** by scored lines **19,19**.

A series of end panels are provided with end panels **20**, foldably connected to panel **10** by scored lines **23** and end panels **24,24** and **26,26** respectively foldably connected to panels **12,12** and **14,14** by scored lines **25,25** and **27,27**.

In FIG. **1** the common top panel **10** is shown divided by a tear-strip **28**. This tear-strip is provided with a tab **29** for ease of grasping and pulling of the tear-strip. Scored lines **22** are also provided on the flaps **20** to permit these to divide into two parts **21,21** when the carton is split apart by removal of the tear-strip **28**.

In common top panel **10**, a pair of handle members **30,30** are defined by substantially severed lines of weakness **31,31** which lines of weakness can be interrupted at spaced apart points to provide tack connections, thus avoiding accidental

dislodgement of the handle member before intended usage thereof. Each handle member **30** may include a hand hold tab **32** defined by line of severance **36**.

Similar handle members **33,33** are provided in inner top panels **18,18**. Each of these includes substantially severed lines of weakness **34** and hand hold tab **35**.

As will be seen from FIG. **2**, the carton is assembled by folding the panels **12,12**; **14,14**; **16,16**; and **18,18** about their respective fold lines such that the inner top panels **18,18** underlie the two halves **11,11** of common top panel **10** and handles **33,33** are in register with handles **30,30**. The panels **18,18** can be joined to common top panel **10** by any suitable means, e.g., an adhesive. The carton blank folded and joined in this manner can then be collapsed into a flat form and stored and shipped for ultimate use in this flat form.

When the carton is to be erected by the user for loading with a plurality of articles such as bottled beverages, the carton walls are folded into a rectangular tubular arrangement as shown in FIG. **2**. With the end flaps open as shown, the carton is filled with the articles after which the end closure panels are infolded into secured together relation, e.g., by means of an adhesive, to form carton end walls as shown in FIG. **3**. The thus erected, filled and sealed carton is ready for shipment and storage.

If the retailer has a demand only for half a carton, he simply removes the tear-strip **28** by pulling the tab **29** leaving two smaller cartons as shown in FIG. **4**.

The ultimate consumer upon receiving a dual carton may readily raise the joined together handle members **33** and **35** as shown in FIG. **5**. In the raised position the portion **33** of each handle effectively becomes an extension of inner vertical panel **16**, thus providing a very strong support for the handle member and eliminating any dangerof the handle tearing from the weight of the filled carton.

If either the retailer or the ultimate consumer splits the carton by removing the strip, the handle members are not affected and they can still be used for carrying the split cartons as shown in FIG. **6**.

Although these handles are shown in use with both halves of the carton in closed condition, the handle members are equally useful after the top panels of the carton have been opened.

A carton for carrying cans is shown in FIGS. **7**, **8** and **9**. It is made from a blank which is basically similar to that shown in FIG. **1**.

As shown particularly in FIG. **7**, the common panel **50** is at the bottom and it is foldably connected to outer vertical panels **51,51**, which are in turn foldably connected to panels **52,52**. The last mentioned panels are foldably connected to panels **53,53**, which are foldably connected to panels **54,54**. Extending respectively from the ends of panel **50**, panels **51,51** and panels **52,52** are foldably connected end flaps **55**; **56,56** and **57,57**. The panels **54,54** are adhesively joined to panel **50** while flaps **58,58** are adhesively joined to flap **55**.

A scored or perforated line of weakness **59** extends along panel **50** and its end flaps **55**. In order to split the carton, it is grasped by the finger tabs **60** and spread apart as shown in FIG. **9**.

Slots **61** are provided in outer panels **51** into which the fingers can be inserted to assist in carrying the carton. Those slots can have tabs which are easily punched in when the carton is to be carried.

For convenience of opening, each panel **52** can be provided with a tear-strip **62** with a tab **63** for easy grasping.

The embodiments of the invention in which an exclusive property or privilege is claimed are defined as follows:

1. An end loading, top opening, twin carton adapted to be separated into two cartons and comprising a pair of article holding compartments joined to a flat common top panel, each compartment having foldably connected inner and outer vertical panels, bottom and inner top panels and end closure panels, said flat common top panel being foldably connected to said outer panels, handle members integrally formed and releasably held in said flat common top panel and each compartment inner top panel with each compartment top panel handle in register with and secured to a corresponding common top panel handle and said flat common top panel including at least one separable line of weakness in the region thereof overlying the line between the inner vertical panels for separating the twin carton into two separate cartons.

2. A carton according to claim **1** wherein the end panels are integrally foldably connected to the common top panel, the outer vertical panels and the bottom panels.

3. A carton according to claim **2** wherein the end panels foldably connected to the common top panel are each provided with a separable line of weakness in alignment with the line between the two inner vertical panels.

4. An end loading, top opening, twin carton adapted to be separated into two cartons and comprising a pair of bottle holding compartments joined to a flat common top panel, each compartment having foldably connected inner and outer vertical panels, bottom and inner top panels and end closure panels, said end closure panels being foldably connected to said outer panels, bottom panels and common top panel and said common top panel being foldably connected to said outer panels, handle members integrally formed and releasably held in said common top panel and each compartment inner top panel with each compartment top panel handle in register with and secured to a corresponding common top panel handle and said common top panel including a tear strip, which when removed splits the common top panel and connected pair of compartments into two separate cartons.

5. A blank for an end loading, top opening, twin carton comprising a centrally located common panel having extending laterally from each longitudinal edge thereof in sequence an outer vertical panel, a first horizontal panel, an inner vertical panel and a second horizontal inner panel, said panels being integrally foldably interconnected by fold lines extending along adjacent edges thereof, said common panel including at least one separable line of weakness extending substantially along the longitudinal axis thereof and a pair of handle members formed in and integral with said common panel on each side of the line of weakness and a handle member formed in and integral with each said second horizontal panel, said handle members being releasably held in said panels.

6. A blank according to claim **5**, including integrally foldably inter-connected end panels.

7. A blank according to claim **6**, wherein the end panels extend from the common panel, the outer vertical panels and the first horizontal panels.

8. A blank according to claim **7** wherein the separable lines of weakness are in the form of a tear strip.

9. A blank according to claim **7** wherein a single separable line of weakness is used.

* * * * *