United States Patent

Morgan

[15] **3,675,813**

[45] **July 11, 1972**

[54] COVER FOR WASTE CONTAINER

[72] Inventor: **Johnson T. Morgan,** 3635 Blue Lake Drive, Birmingham, Ala. 35216

[22] Filed: **July 16, 1970**

[21] Appl. No.: **55,389**

[52] **U.S. Cl.** .....**220/36,** 220/31 R, 220/94 R

[51] **Int. Cl.** **A65d 51/04,** B65d 25/28

[58] **Field of Search**.....220/1 T, 18, 31 R, 36, 63 R, 220/65, 94 R; 206/DIG. 12

[56] **References Cited**

UNITED STATES PATENTS

3,127,052	3/1964	Mayers	220/65
2,451,194	10/1948	Braun	206/DIG. 12
966,145	8/1910	Wilder	220/31 R
2,138,537	11/1938	Bernat	220/36
3,207,355	9/1965	Saphier	220/18

FOREIGN PATENTS OR APPLICATIONS

338,396	6/1959	Switzerland	220/63 R
919,012	2/1963	Great Britain	220/31 R

Primary Examiner—George E. Lowrance
Attorney—Jennings, Carter and Thompson

[57] **ABSTRACT**

Plate-like cover hingedly connected at one side to waste container with other side of cover carrying outwardly and upwardly projecting arcuate member positioned for lateral force applied thereto to exert lifting force to said opposite side of cover. To reduce required lifting force, counterweight carried by said one side of cover.

6 Claims, 4 Drawing Figures

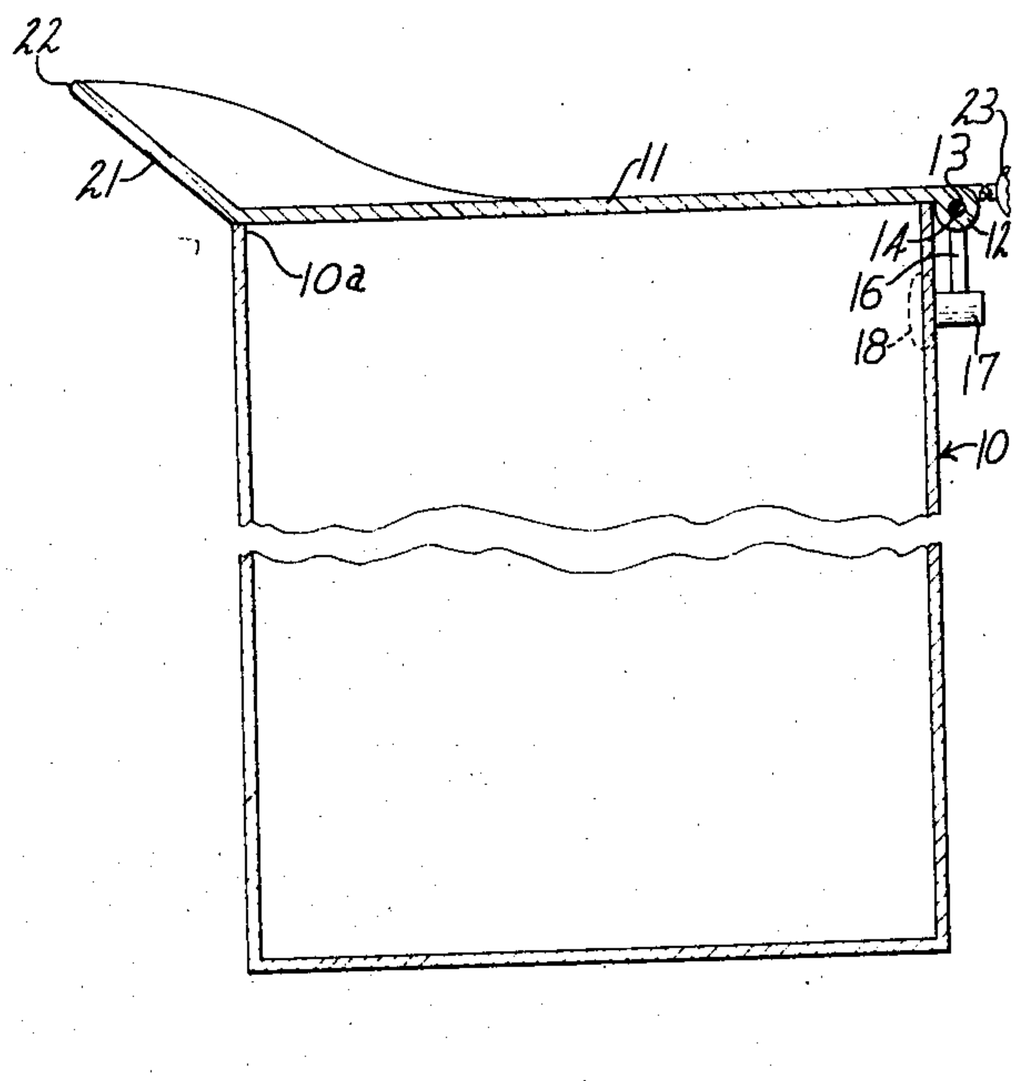

FIG 1

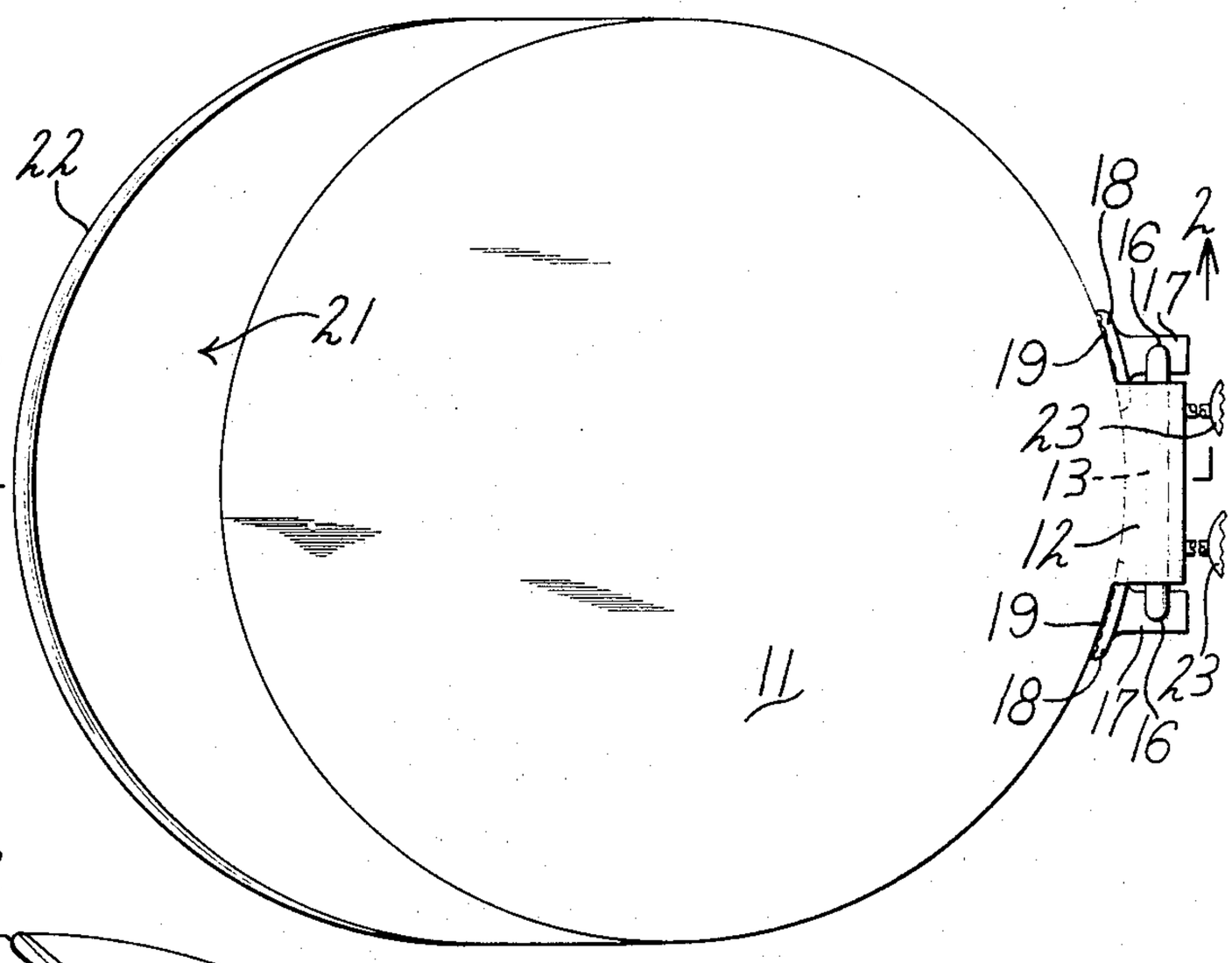

FIG 3

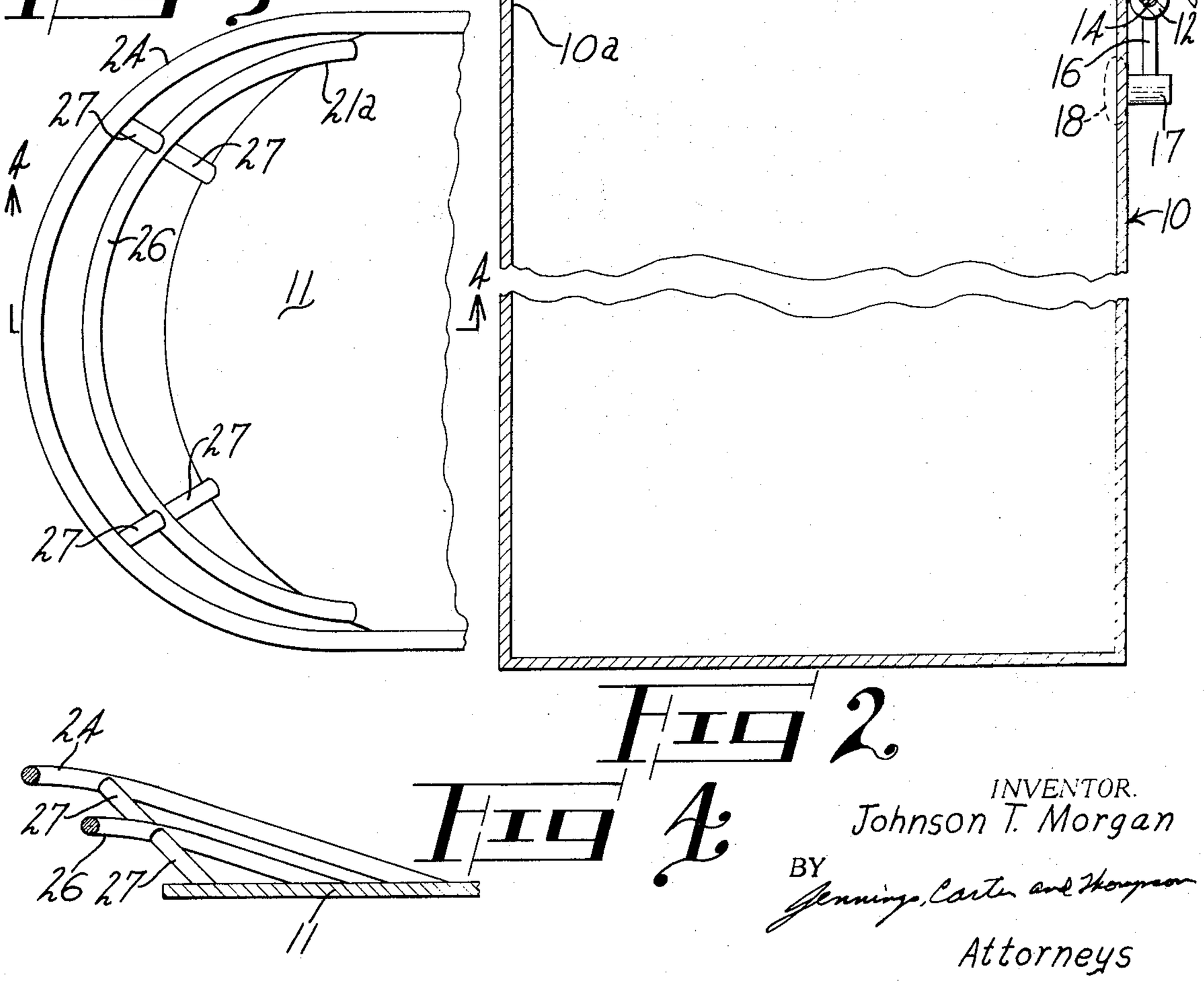

FIG 2

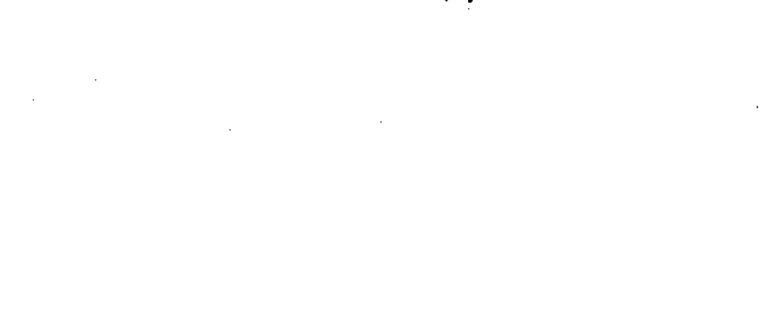

FIG 4

INVENTOR.
Johnson T. Morgan
BY
Jennings, Carter and Thompson
Attorneys

COVER FOR WASTE CONTAINER

BACKGROUND OF THE INVENTION

This invention relates to a cover or lid for a waste container, such as a litter or garbage container and more particularly to a cover which is pivotally connected at one side to the container and is provided with improved lifting means at the opposite side thereof whereby lateral force applied to the lifting means exerts a lifting force to that side of the cover.

Heretofore in the art to which my invention relates, difficulties have been encountered in opening and closing the covers for litter and garbage containers due to the fact that the user often has both hands full and cannot lift the cover without freeing one hand. Also, after litter, garbage or the like is placed in a conventional type litter or garbage can, the lid is often difficult to replace due to the fact that it often becomes bent, distorted or lost whereby the container remains open for a long period of time thus attracting insects and collecting rainwater. This not only produces undesirable odors but creates very unsanitary conditions. Garbage and litter can covers which pivot inwardly of the can have been proposed. However, these covers are difficult to actuate after a substantial amount of garbage or litter has been placed in the can and at the same time the hands of the user become soiled due to contacting the garbage or litter and the inner portion of the can as the garbage or litter is inserted therein.

BRIEF SUMMARY OF THE INVENTION

In accordance with my present invention, I provide a plate-like cover or lid for a waste container with the cover being hingedly connected at one side to the container with the other side of the cover carrying an upwardly and outwardly projecting arcuate member which is positioned for lateral force applied thereto to exert a lifting force to the adjacent side of the cover. To further reduce the lifting force required to actuate the cover, counterweights are provided at the side of the cover member which is hinged to the container.

Apparatus embodying features of my invention is illustrated in the accompanying drawing, forming a part of this application, in which:

FIG. **1** is a top plan view showing my improved cover attached to a waste container, parts being broken away;

FIG. **2** is a vertical sectional view taken generally along the line **2—2** of FIG. **1**;

FIG. **3** is a fragmental, top plan view showing a modified form of cover member; and,

FIG. **4** is a sectional view taken generally along the line **4—4** of FIG. **3**.

Referring now to the drawing for a better understanding of my invention I show a waste container **10** having an opening **10***a* at the upper end thereof. Extending tranversely across the upper end of the container **10** is a plate-like lid or cover **11** which is of a width to span and seal the entire upper end of the container **10**. Projecting laterally from one side of the cover **11** is a hinge bracket **12** having an opening **13** therethrough for receiving a pivot pin **14** having depending legs **16** at each side thereof. The lower end of each leg **16** is secured rigidly to a connector bracket **17** having a resilient cup-like suction member **18** at the inner side thereof, as shown in FIG. **1**. A suitable adhesive **19** is provided between the suction cups **18** and the adjacent side of the container **10** to provide a rigid connection therebetween.

The side of the plate-like cover **11** opposite the side thereof hingedly connected to the container **10** carries an outwardly and upwardly projecting arcuate flange member **21** having an arcuate outer surface **22**. As shown in FIG. **1**, the sides of the arcuate member **21** merge with the plate-like cover **11** along lines which are generally tangent to the plate-like cover.

In the event the plate-like cover **11** and the arcuate member **21** are formed of a heavy material, I provide rearwardly projecting counterweights **23** which are secured rigidly to the bracket **12**, as shown in FIGS. **1** and **2**.

The upwardly and outwardly projecting arcuate flange member **21** extends in position for a lateral force applied thereto in a generally horizontal plane to exert an upward lifting force to the adjacent side of the plate-like cover **11**. Since the arcuate surface **22** extends around a substantial area of the plate-like cover **11**, the cover **11** may be raised by applying a lateral force against any portion of the upwardly and outwardly extending arcuate flange member **21** whereupon the cover **11** would be pivoted upwardly about the hinge pin **14**.

From the foregoing description, the operation of my improved cover or lid for a waste container will be readily understood. To position litter or garbage within the container **10**, the user merely applies a lateral force against the upwardly and outwardly extending arcuate flange member **21** which in turn exerts an upward lifting force to the adjacent side of the cover **11** whereby the cover pivots to open position about the pivot pin **14**. With the container **10** thus opened, the litter or garbage is inserted with no difficulty. After the litter or garbage has thus been deposited in the container **10**, the plate-like cover **11** returns to the closed position shown in FIG. **2** to thus seal the upper end of the container. That is, the plate-like cover **11** and the upwardly and outwardly extending arcuate flange member **21** are of a weight greater than the weight of the counterweight **23** whereby the cover **11** always returns automatically to closed position. The counterweights **23** merely reduce the force required to lift the cover. While I have shown two counterweights **23**, it will be apparent that one or more counterweights may be employed.

In FIGS. **3** and **4** of the drawing, I show a modified form of my invention in which the upwardly and outwardly projecting arcuate member is indicated at **21***a*. Instead of being in the form of an arcuate flange, the member **21***a* comprises arcuate bar-like members **24** and **26** which are spaced from each other with the ends of the bar members **24** and **26** being secured rigidly to the plate-like cover **11** by suitable means, such as by welding. As shown in FIGS. **3** and **4** outwardly projecting brace members **27** are provided between the cover **11** and the bar member **26** and between the bar member **24** and the bar member **26** to add rigidity to the structure.

The operation of the cover shown in FIGS. **3** and **4** is identical to the operation of the cover shown in FIGS. **1** and **2**. That is, to pivot the cover **11** shown in FIGS. **3** and **4** to the open position, the user merely applies a lateral force against either of the arcuate bar-like members **24** or **26**, as the case may be, whereupon a vertical force is exerted to thus lift the adjacent side of the cover **11**.

From the foregoing, it will be seen that I have devised an improved cover for a waste container. By providing a cover which completely seals the upper end of the container and automatically returns to seal position upon release of the cover, the container remains in a sealed condition at all times, thus eliminating odors and at the same time preventing the collection of rainwater in the container. Also, since the cover remains in a closed position, the container does not attract insects thus providing for sanitary conditions at all times. Furthermore, by providing an arcuate member for lifting the cover, there is no danger of injury to the user and at the same time a shorter reach is required to deposit garbage or waste into the container **10**. Furthermore, by providing the arcuate, upwardly and outwardly extending member, the user can open the container by merely engaging the back of his hand with the arcuate member at any point along the arcuate member thus assuring easy opening of the cover **11** even though the user might not be directly in front of the garbage can.

While I have shown my invention in but two forms, it will be obvious to those skilled in the art that it is not so limited, but is susceptible of various other changes and modifications without departing from the spirit thereof.

What I claim is:

1. A cover for a waste container comprising:

a. a plate-like member of a size to span the top of a waste container,

b. hinge means pivotally connecting one side of said plate-like member to the waste container, and

c. an arcuate member carried by the opposite side of said plate-like member from said one side having an arcuate outer surface and extending around a portion of the periphery of said plate-like member with the sides of said arcuate member merging with the periphery of said plate-like member along lines which are generally tangent to said plate-like member and projecting outwardly and upwardly beyond the periphery of said plate-like member and the top of said waste container in position for a lateral force applied to said arcuate member to exert an upward lifting force to said opposite side of the plate-like member.

2. A cover as defined in claim 1 in which said arcuate member comprises an upwardly and outwardly extending flange member having an outer arcuate surface.

3. A cover as defined in claim 1 in which said arcuate member comprises at least one arcuate bar-like member.

4. A cover as defined in claim 1 in which said arcuate member comprises a plurality of spaced apart arcuate bar-like members.

5. A cover as defined in claim 1 in which said hinge means is secured to said waste container by suction members with an adhesive between said suction members and said waste container.

6. A cover as defined in claim 1 in which at least one counterweight is carried by said one side of said plate-like member to reduce the amount of force required to lift said opposite side of said plate-like member.

* * * * *