United States Patent

Betts et al.

[15] **3,668,898**

[45] **June 13, 1972**

[54] KNITTING METHODS

[72] Inventors: **Max William Betts,** Coventry; **Frank Robinson,** Borrowash, both of England

[73] Assignee: **Courtaulds Limited,** London, England

[22] Filed: **Sept. 23, 1968**

[21] Appl. No.: **761,729**

[52] **U.S. Cl.** **66/70,** 66/176

[51] **Int. Cl.** **D04b 7/10**

[58] **Field of Search** 66/60–78

[56] **References Cited**

UNITED STATES PATENTS

3,167,938 2/1965 Seiler 66/70

Primary Examiner—Ronald Feldbaum

Attorney—Davis, Hoxie, Faithfull & Hapgood

[57] **ABSTRACT**

A method of knitting a jersey or similar garment comprises knitting a body portion of said garment in the form of a tube on needles of a first pair of beds of a knitting machine, knitting two separate sleeve portions in the form of tubes, one sleeve portion being knitted on each of two second pairs of beds of the knitting machine which second pair of beds are laterally movable relative to and capable of overlapping the first mentioned pair of beds, arranging the body and sleeve portions adjacent each other, traversing all the needles carrying stitches with a yarn carrier so as to join the body and sleeve portions and, during subsequent knitting, before at least some of the courses, reducing the number of wales in at least one of the portions by transferring stitches of wales of the portion to be reduced, adjacent the other portion to the needles carrying adjacent wales and decreasing the lateral spacing apart of the second beds by a number of needle pitches equal to the number of wales by which the portion has been reduced.

7 Claims, 13 Drawing Figures

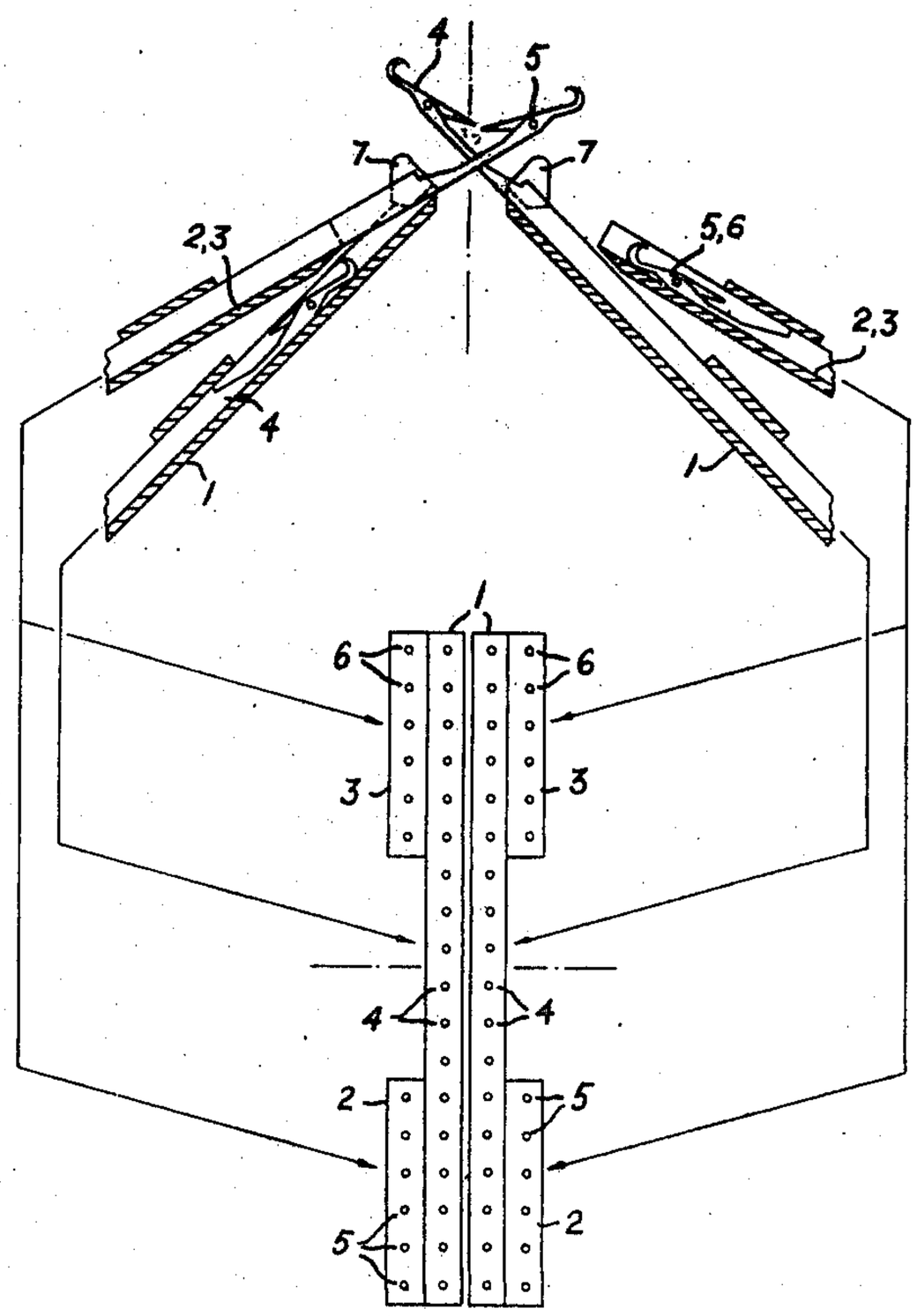

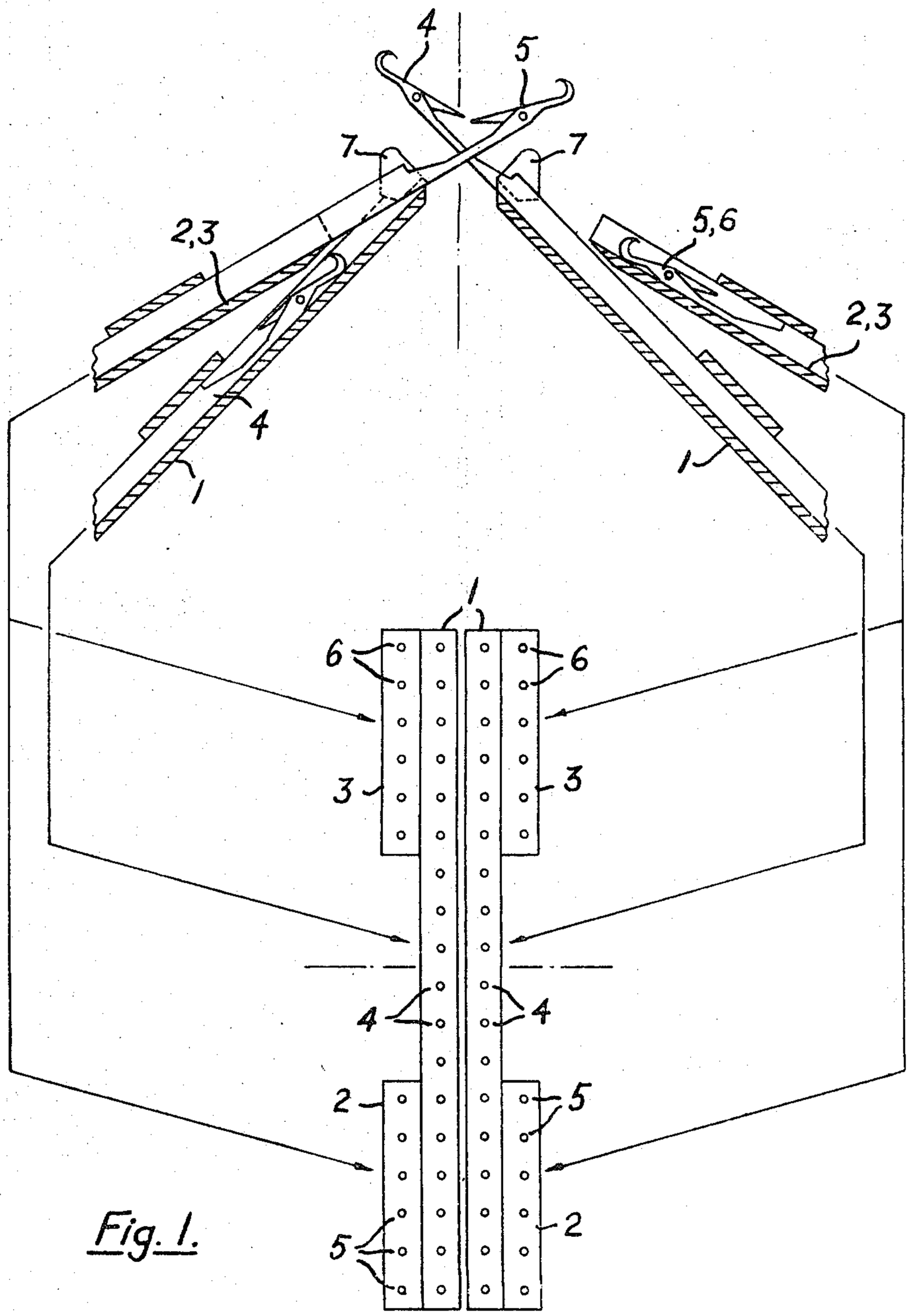

Fig. 1.

Inventor

MAX WILLIAM BETTS &
FRANK ROBINSON
By

DAVIS, HOXIE, FAITHFULL & HAPGOOD *Attorney*

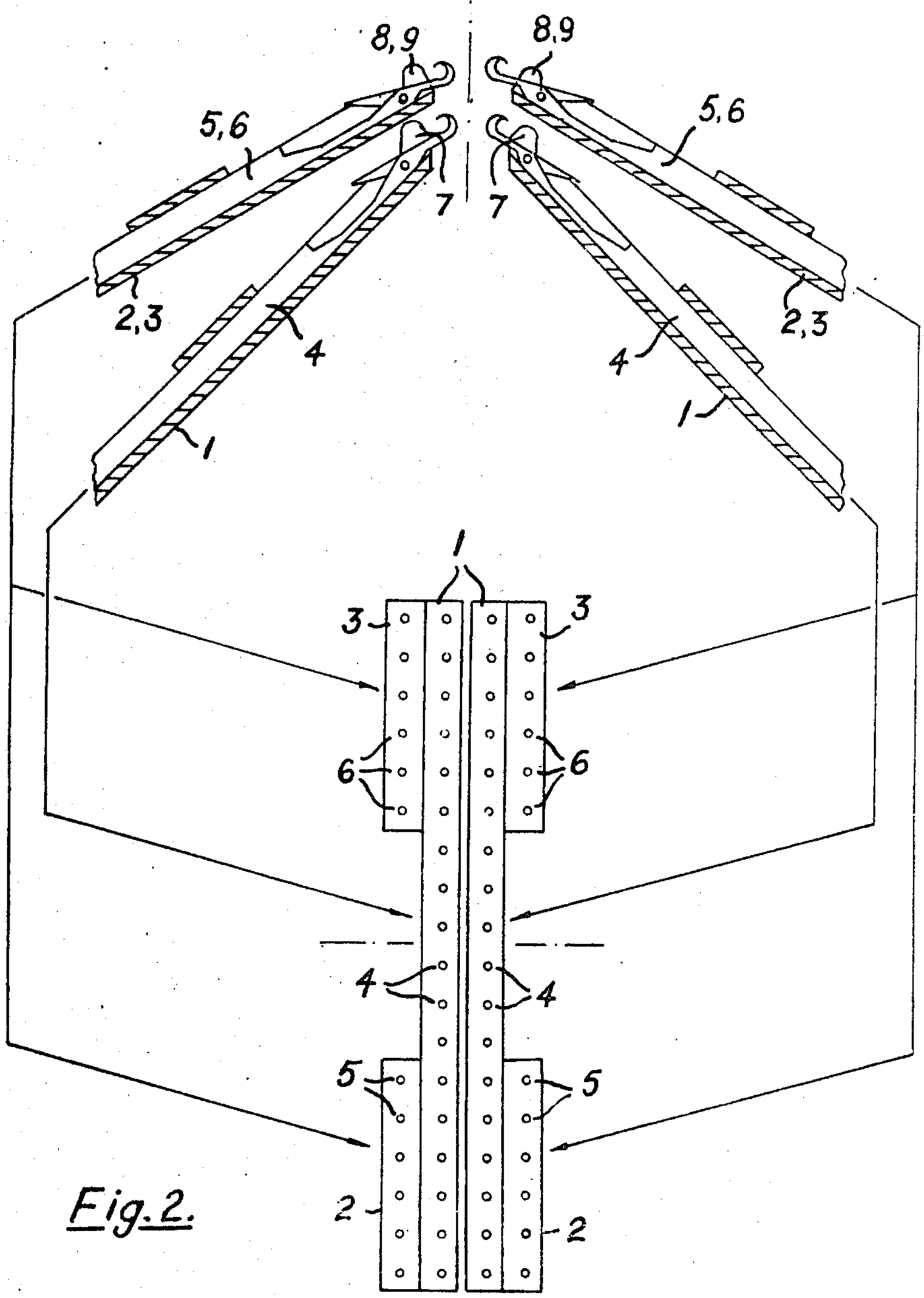

Fig. 2.

Inventor
MAX WILLIAM BETTS &
FRANK ROBINSON
By

DAVIS, HOXIE, FAITHFULL & HAPGOOD *Attorney*

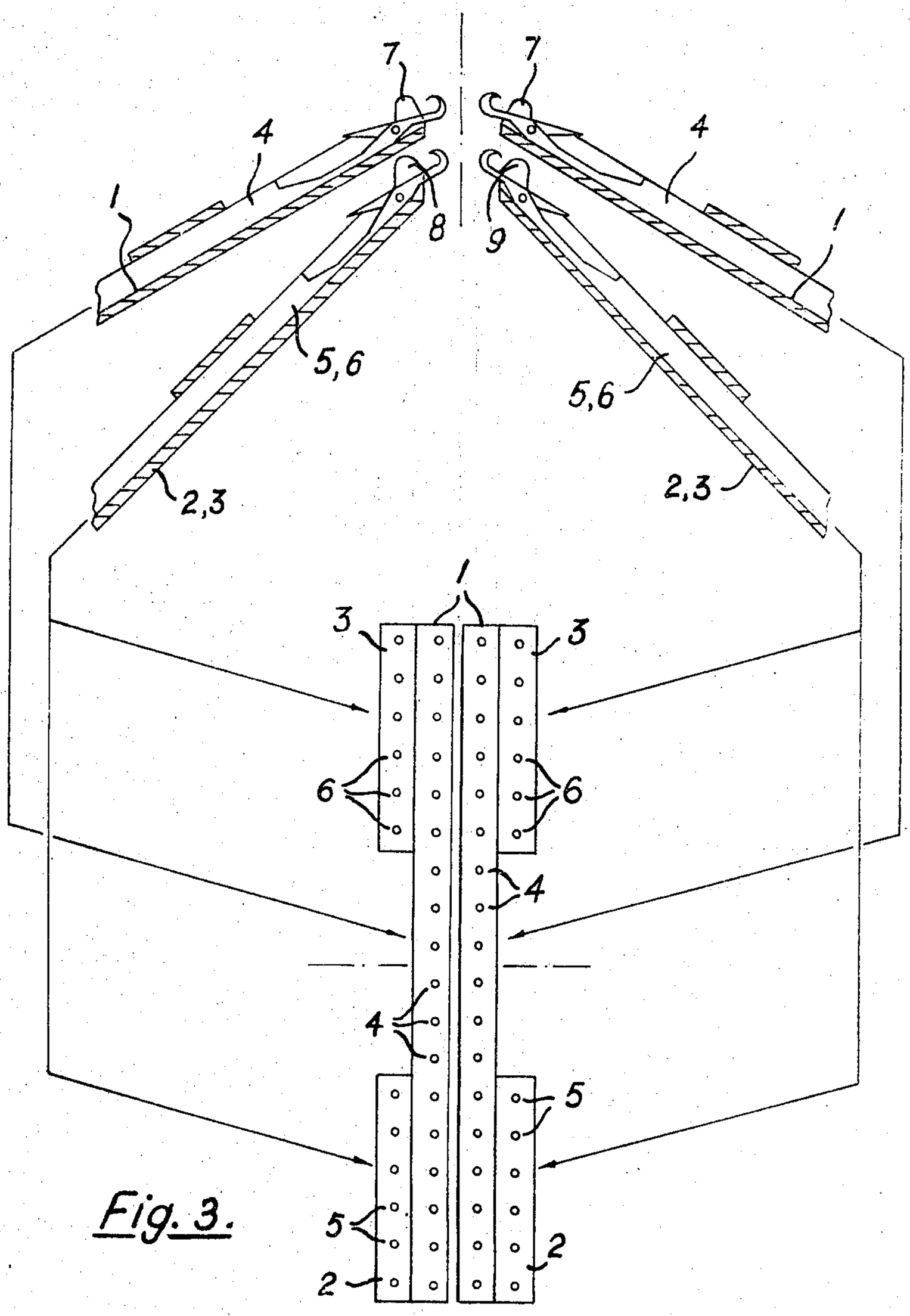

Fig. 3.

Inventor
MAX WILLIAM BETTS &
FRANK ROBINSON
By

DAVIS, HOXIE, FAITHFULL & HAPGOOD *Attorney*

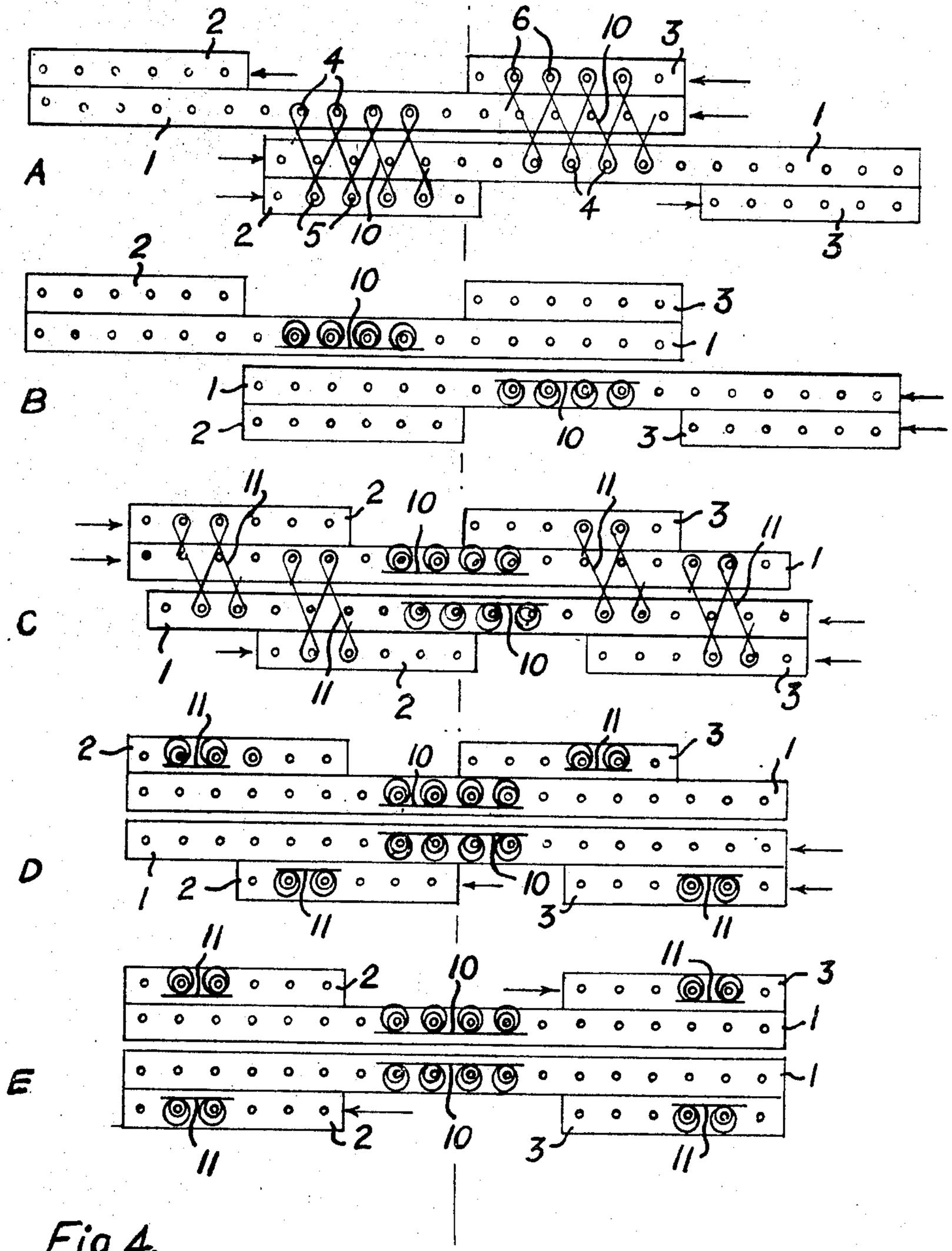

Fig.4.

Inventor
MAX WILLIAM BETTS &
FRANK ROBINSON
By

DAVIS, HOXIE, FAITHFULL & HAPGOOD *Attorney*

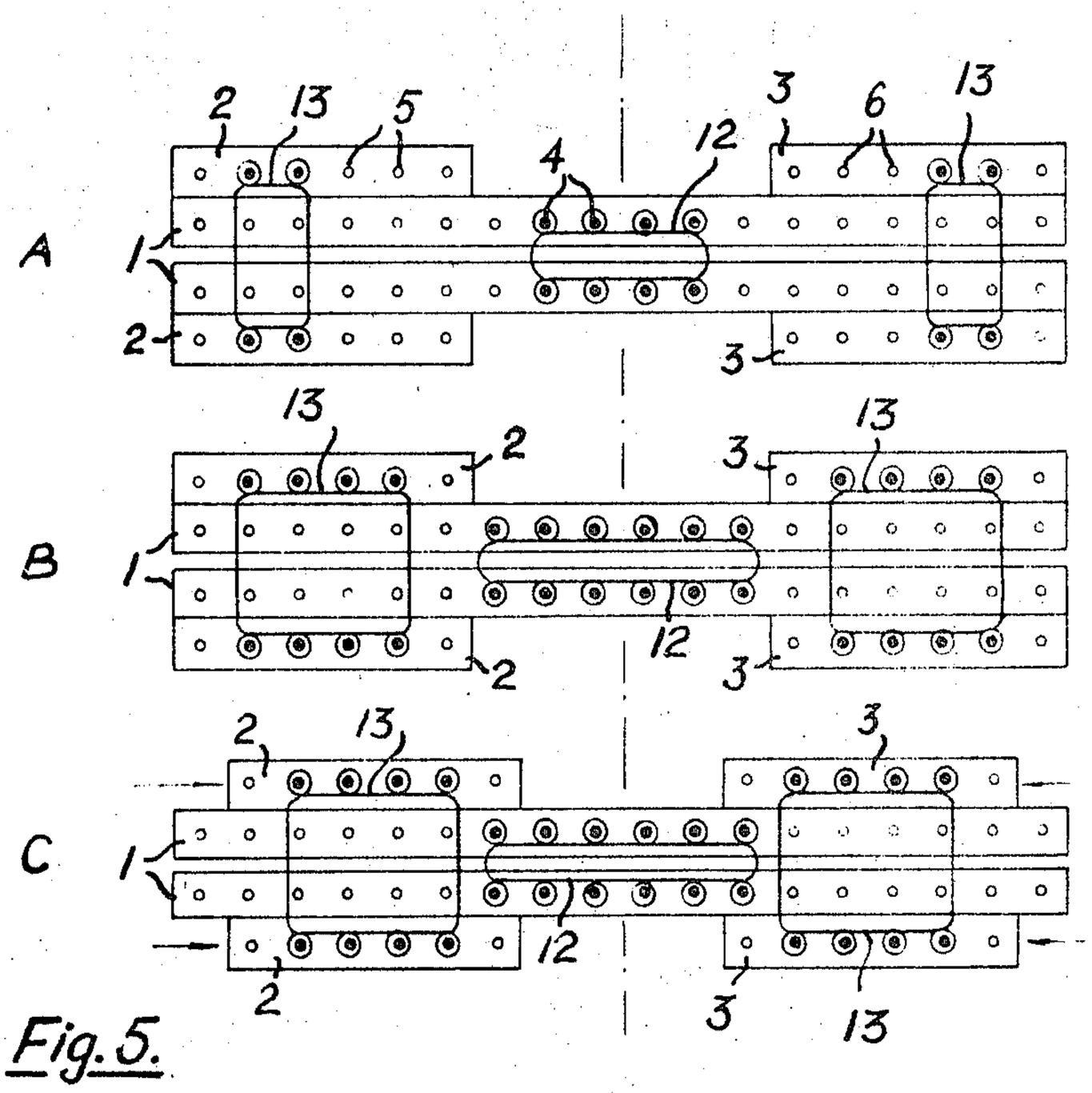

Fig. 5.

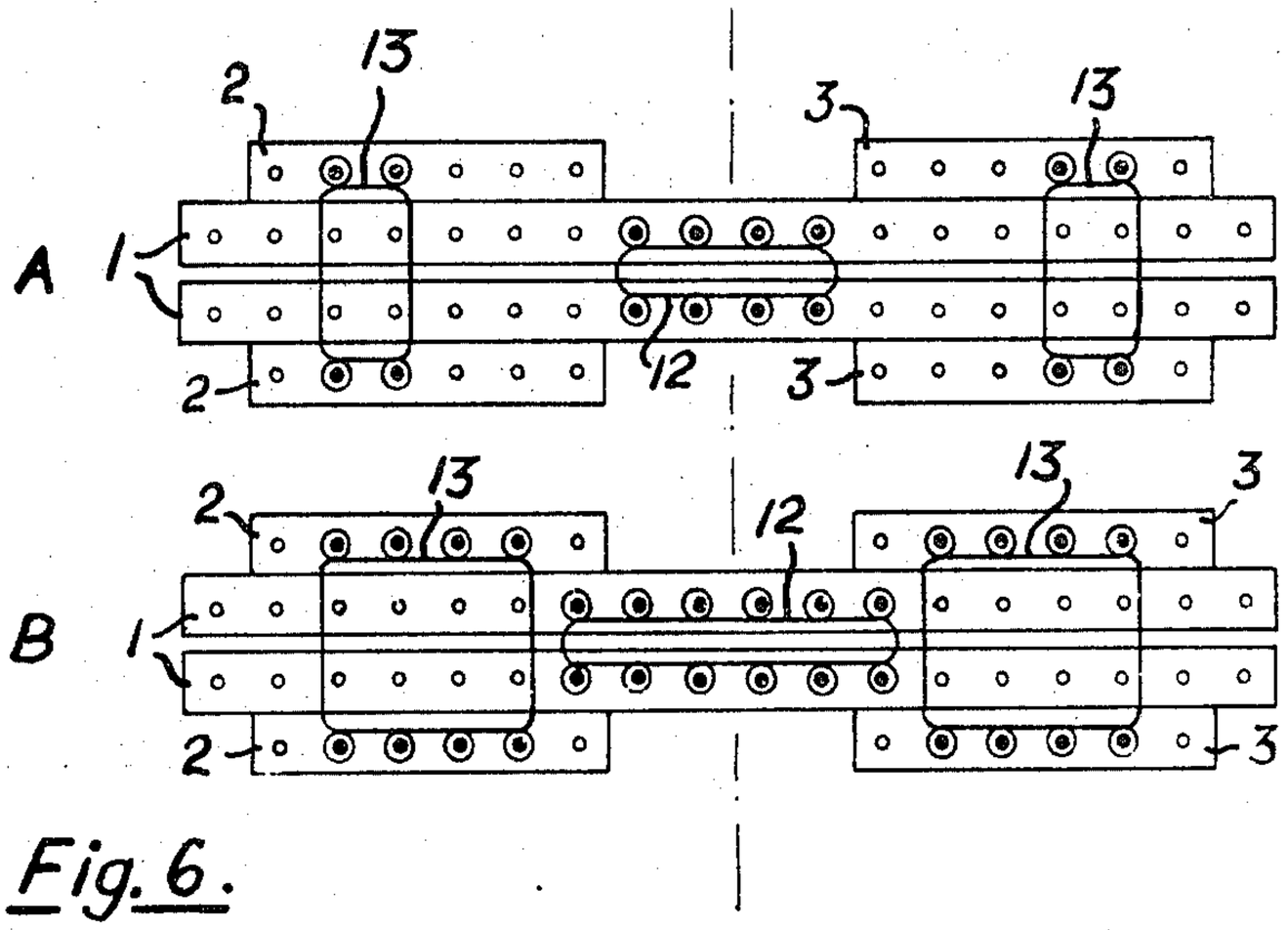

Fig. 6.

Inventor
MAX WILLIAM BETTS &
FRANK ROBINSON
By
DAVIS, HOXIE, FAITHFULL & HAPGOOD *Attorney*

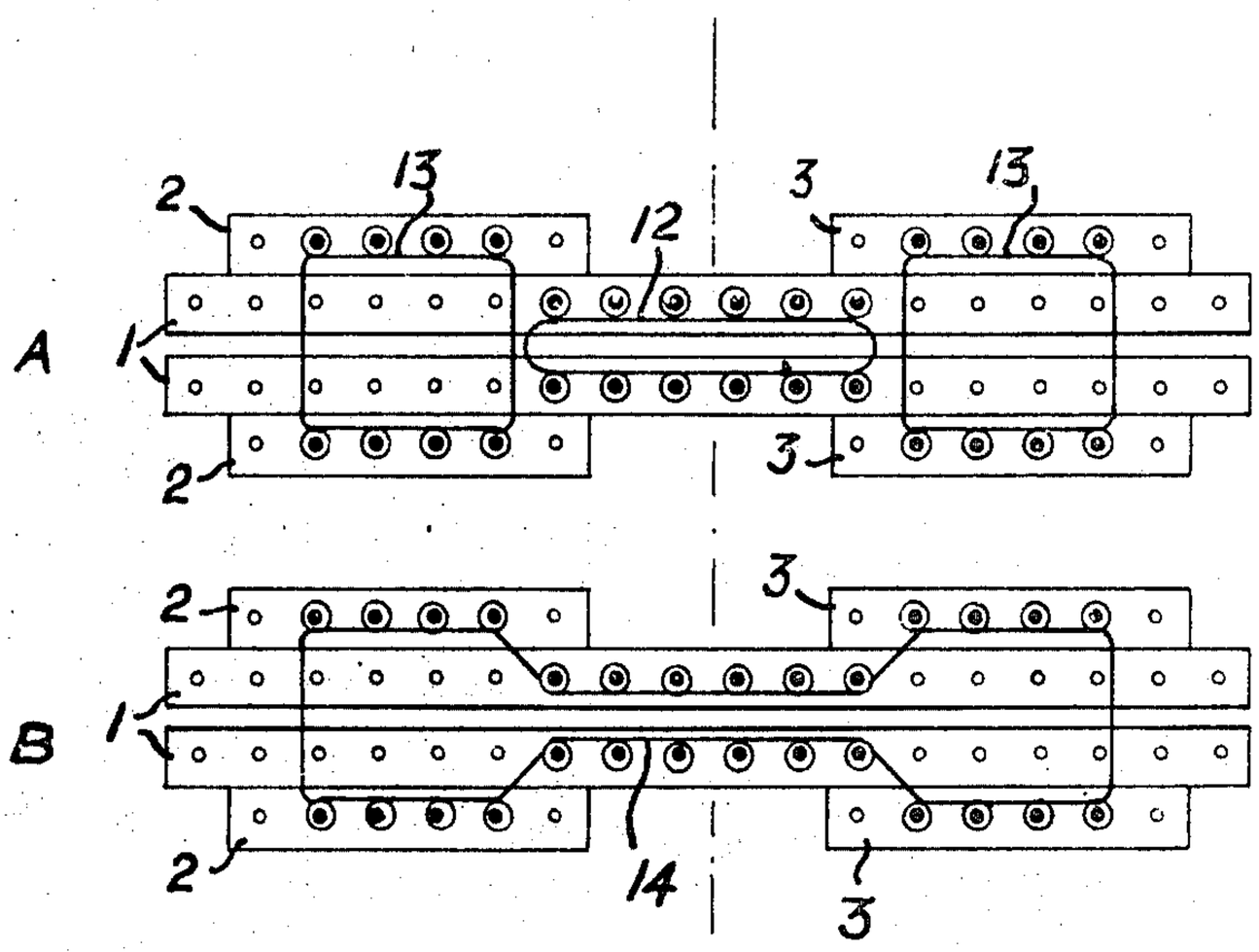

Fig. 7.

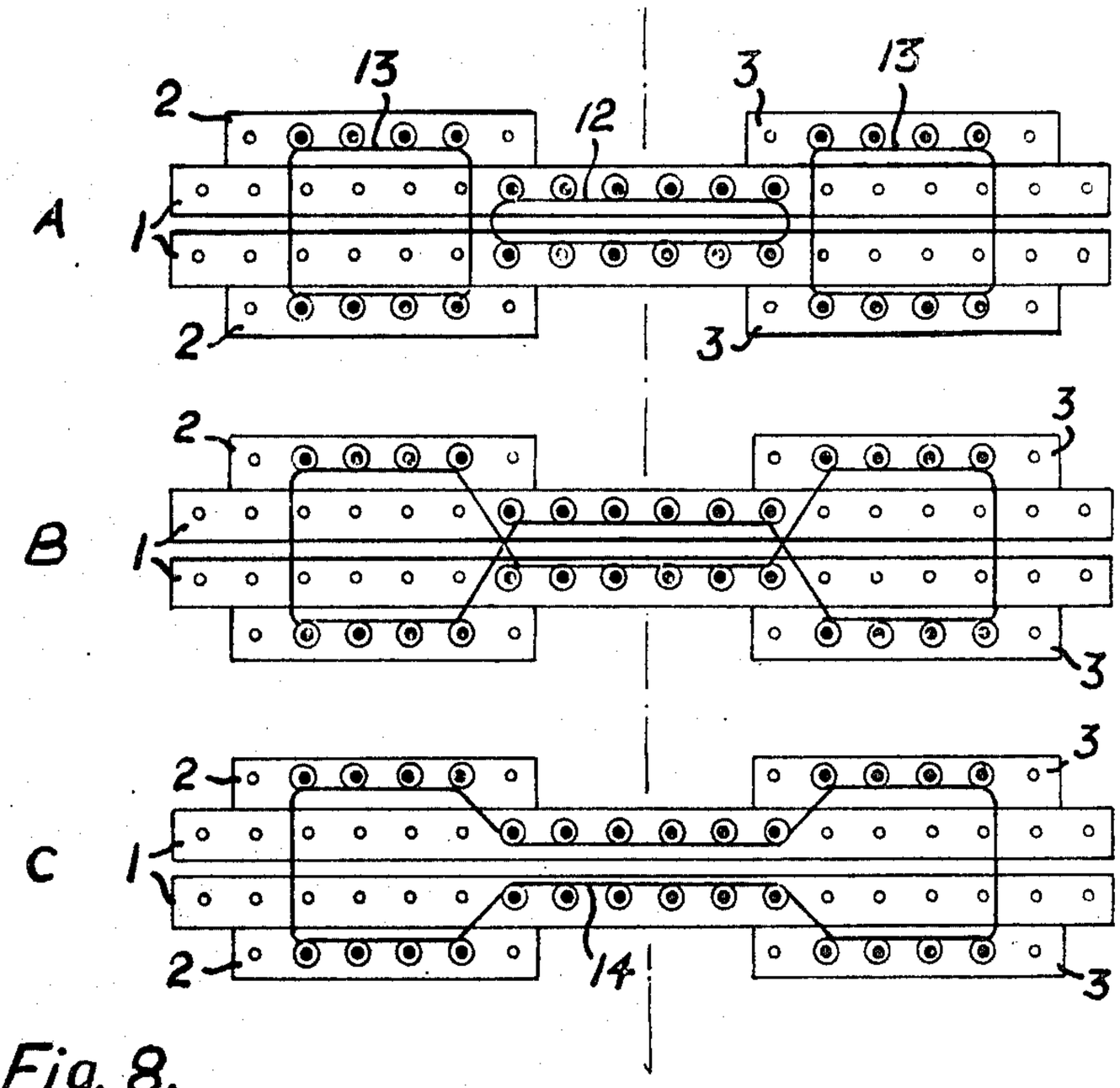

Fig. 8.

Inventor

MAX WILLIAM BETTS &
FRANK ROBINSON
By

DAVIS, HOXIE, FAITHFULL & HAPGOOD *Attorney*

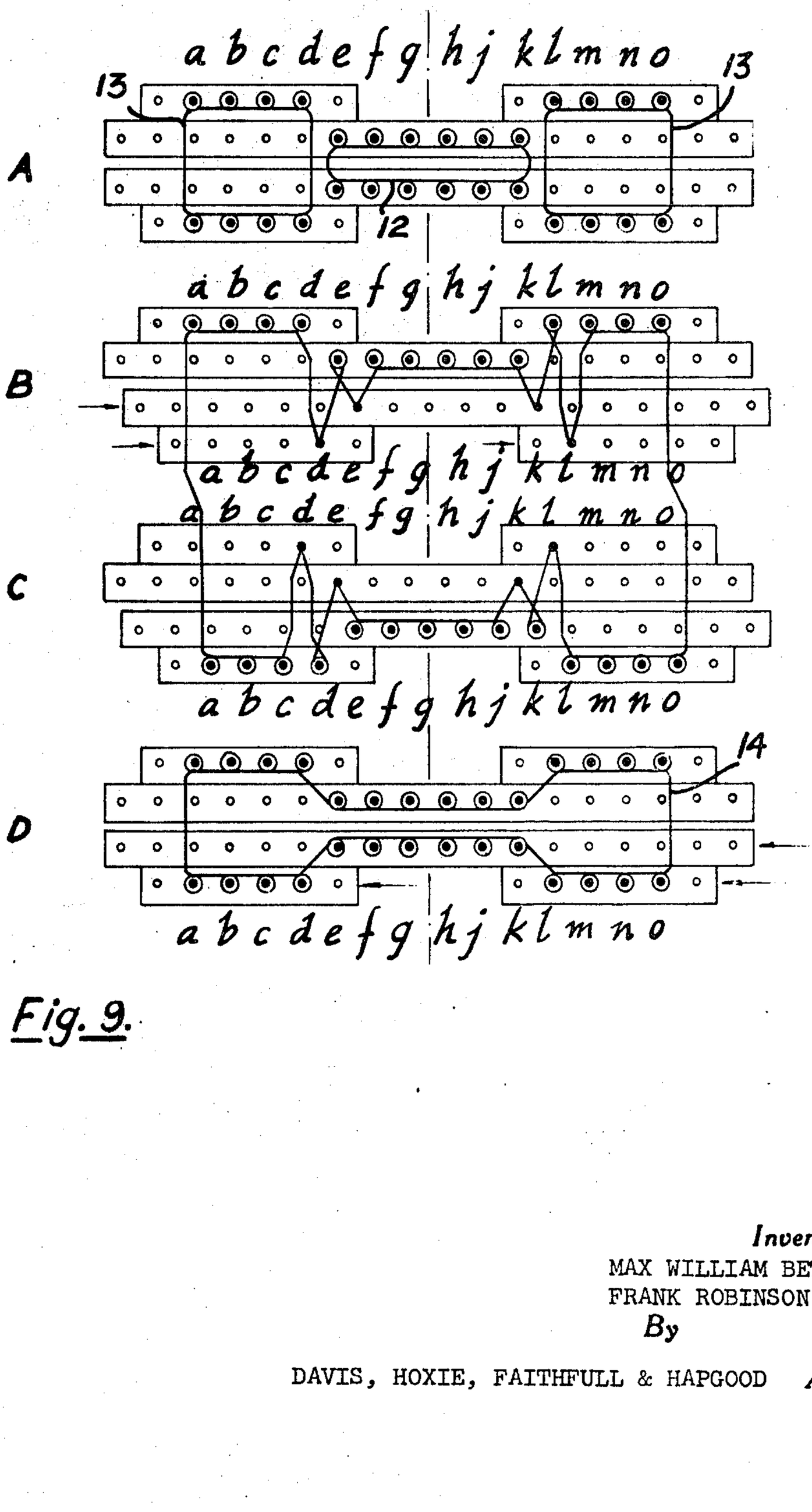

Fig. 9.

Inventor
MAX WILLIAM BETTS &
FRANK ROBINSON
By

DAVIS, HOXIE, FAITHFULL & HAPGOOD *Attorney*

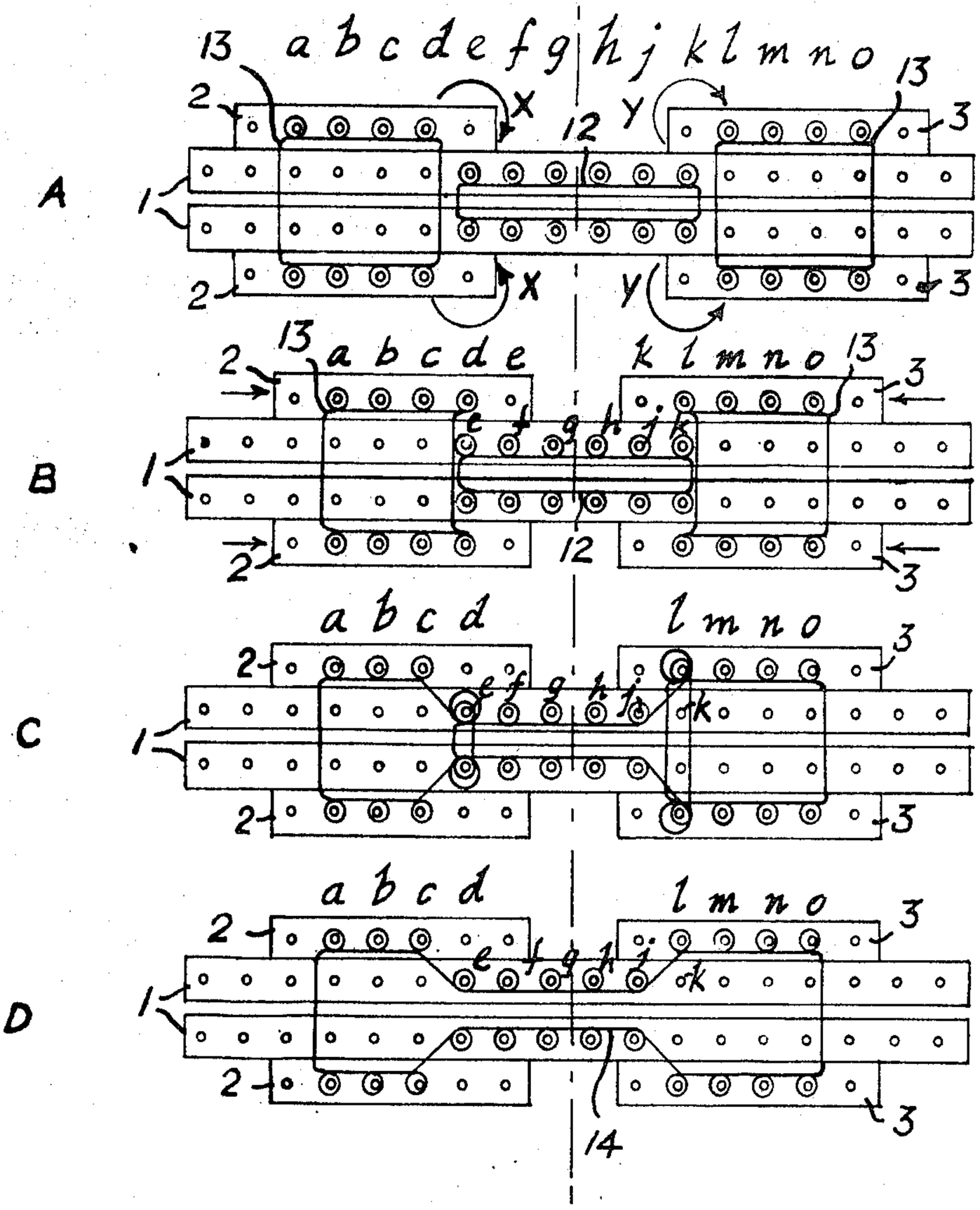

Fig. 10.

Inventor
MAX WILLIAM BETTS &
FRANK ROBINSON
By

DAVIS, HOXIE, FAITHFULL & HAPGOOD *Attorney*

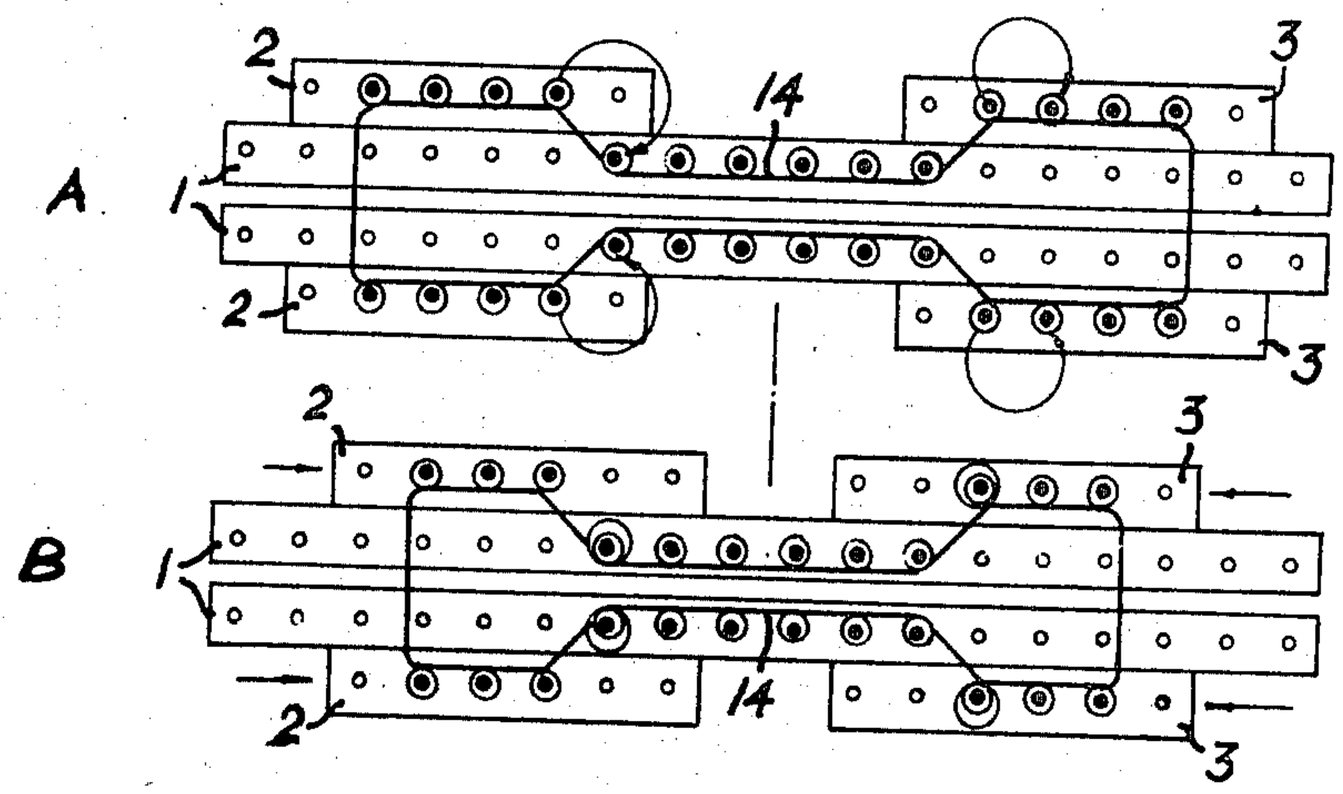

Fig.11.

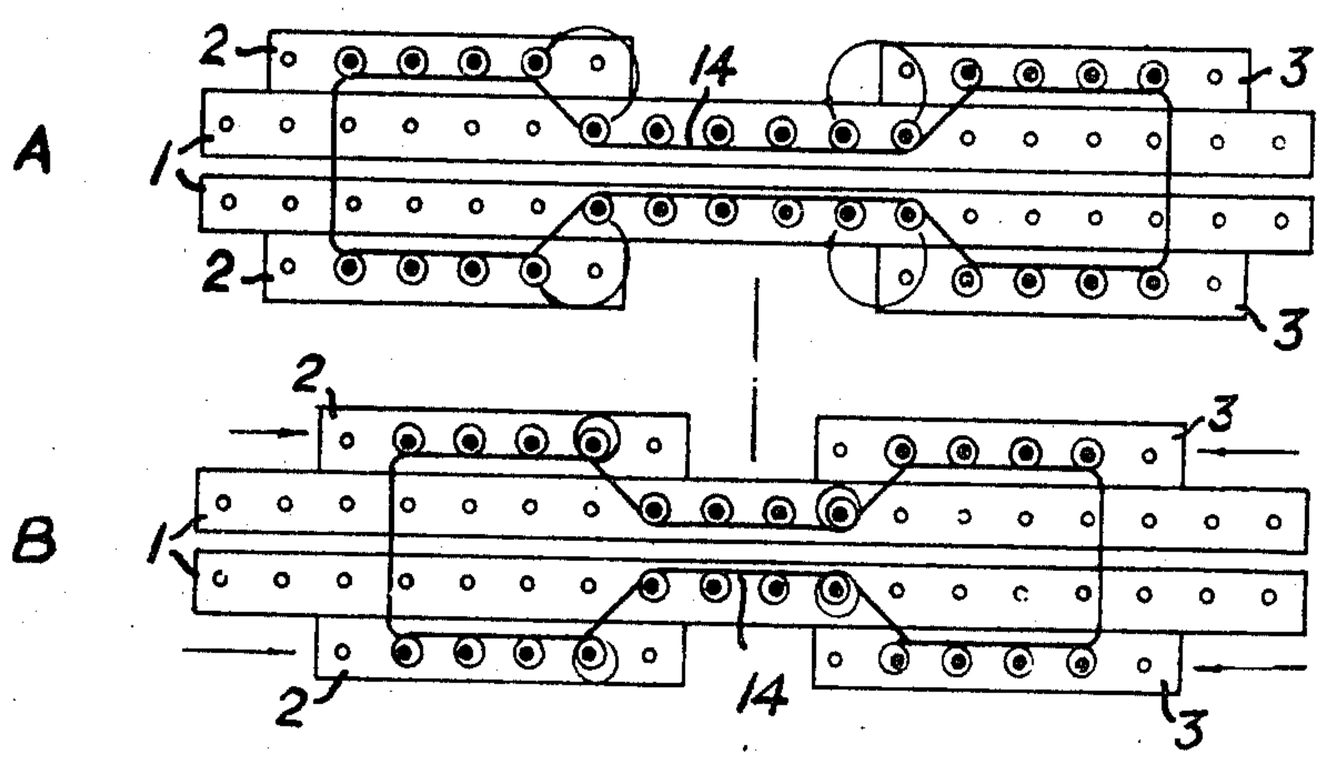

Fig.12.

Inventor
MAX WILLIAM BETTS &
FRANK ROBINSON
By

DAVIS, HOXIE, FAITHFULL & HAPGOOD *Attorney*

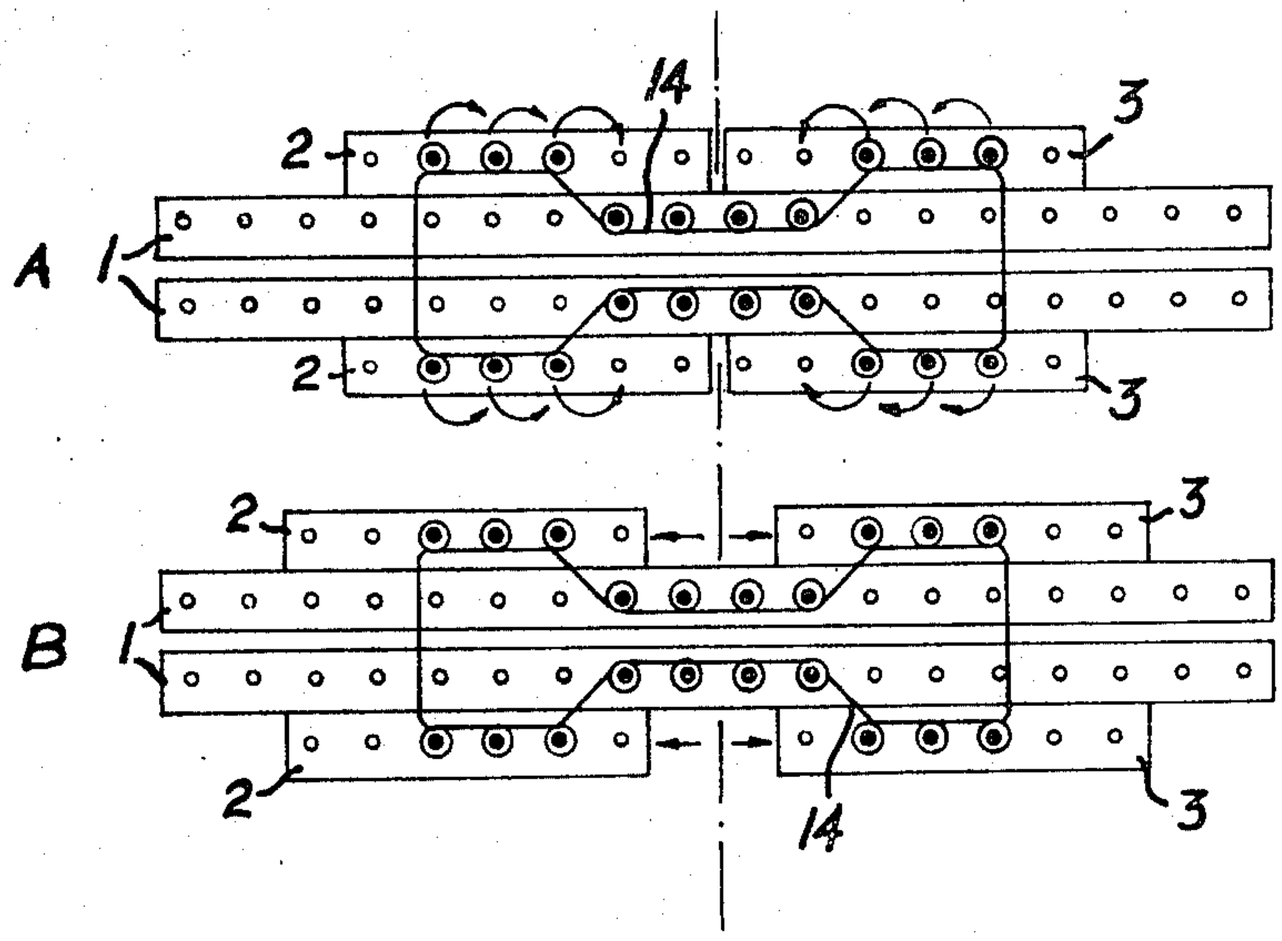

Fig.13.

Inventor

MAX WILLIAM BETTS &
FRANK ROBINSON
By

DAVIS, HOXIE, FAITHFULL & HAPGOOD *Attorney*

KNITTING METHODS

This invention relates to knitting methods, and is concerned with the knitting of garments on knitting machines and can be applied to modified flat bar V-bed machines.

By a 'flat bar V-bed machine' we mean a machine having at least one pair of opposed straight needle beds lying at an angle to each other so as to define an inverted V-shape, a reciprocating head with cam tracks to co-operate with the butts of needles slidably mounted in grooves or 'tricks' in the needle beds for operating the needles independently of each other, and at least one yarn carrier to traverse the said pair of beds with the reciprocating head for producing knitted loops of yarn on needles which are operated for the purpose.

There are two known methods of producing garments in knitted fabric. In one of these methods flat or tubular knitted fabric is simply cut into suitable shape or shapes for one or more pieces to be secured together to form the garment, usually by stitching together the edges of the piece or pieces. In the other method the component piece or pieces is/are knitted to the shape or shapes required by suitable increase or decrease of the numbers of stitches in the various courses — the process known as "fashioning" — and then again the edges of the piece or pieces are secured together, usually by stitching.

In both these methods considerable labor is involved in "-making up," or securing together the edges of the shaped piece or pieces, and the seams produced are sometimes unsightly. Moreover, seam failure is a common cause of complaint with such garments, either due to inefficient seaming or due to the weakness of the seam causing it to burst during wear. Also in the first mentioned process a considerable quantity of fabric is usually cut to waste, sometimes as much as 40 percent of the total fabric used.

The present invention concerns a method of machine knitting a jersey or similar garment comprising sleeves attached to a body which may, for example, be of waist length or full body length. Such a garment will hereinafter be referred to as a 'jersey.'

It is now proposed to employ for the knitting of jerseys a modified flat bar V-bed machine with at least three pairs of opposed needle beds extending generally parallel to each other, although the angle between the beds of each pair may be different. The beds of two of the pairs (which will be called the auxiliary beds) are laterally movable relative to, and can overlap the other pair, which will be called the main beds. The auxiliary beds may be above or below the main beds. Thus they may be arranged to overlap the main beds either outside or inside the inverted V defined by the main beds.

An example of a modified flat bar V-bed machine having two pairs of auxiliary beds above the main beds is the Dubied DFF machine manufactured by Edouard Dubied & Cie, Neufchatel, Switzerland. This machine is described in the "-Dubied Knitting Manual," published in 1967 by Dubied. The DFF machine has auxiliary beds intended for the knitting of narrow selvage strips along the edges of a fabric, and although miniature garments (e.g. for dolls) can be knitted on the machine using hand transfer of stitches, according to the process of the invention, the automatic knitting of full size garments necessitates a few rather elementary modifications of the machine. In particular, the DFF auxiliary beds carry only sufficient needles to knit the loops of a narrow border of a garment, for example, 15 needles. Moreover, these needles and the cams controlling them do not include loop transfer facilities. Thus, to provide fully automatic manufacture of full size garments, the auxiliary beds of the DFF machine should be enlarged and provided with needles and cams for stitch transfer of the same type used for those functions in the DFF main beds.

The main beds of the Dubied DFF machine contain needles each having a slot to receive the hook of an opposite needle so that a loop can be transferred from a slotted needle to the opposite needle. These needles also have a cranked configuration which avoids shogging or racking (i.e. lateral movement)

of the beds to obtain the required needle alignment. By including such needles in the auxiliary beds and the appropriate cams to actuate them, automatic stitch transfer between the main and auxiliary beds can be carried out. In the DFF machine, the auxiliary beds are pivoted on a transverse bar so that they can be swung to lift their needles clear of the knock-over bits of the main beds during lateral movement. Lateral movement, to effect narrowing, is accomplished by means of a pawl on the cam carriage, and may be carried out to the extent of almost half the length of the main beds for each pair of auxiliary beds.

It will be understood that the DFF machine and its components are simply exemplary of machines and mechanisms which may be used to practice the invention and that the invention, which is concerned with a method of of knitting a garment or substantial part thereof in one integral piece by a new sequence of knitting steps, may be performed on machines of other manufacture.

According to this invention a method of knitting a jersey comprises knitting a body portion as a tube on needles of the main beds of a modified flat bar V-bed knitting machine, knitting separate sleeve portions as tubes, one on needles of each of two pairs of auxiliary beds laterally movable relative to and capable of overlapping the main beds, arranging the body and sleeve portions adjacent to each other, traversing all the needles carrying stitches with a yarn carrier so as to join the body and sleeve portions and, during subsequent knitting, before knitting at least some of the courses, reducing the number of wales in the body portion and/or reducing the number of wales in the sleeve portions by transferring stitches of wales of the body portion or sleeve portion adjacent the other to needles carrying adjacent wales and decreasing the lateral spacing apart of the pairs of auxiliary beds by a number of needle pitches equal to the number by which the number of wales has been reduced.

The reduction of the wales after the tubular body and sleeve portions are joined causes the sleeve wales to be inclined to the body wales in the finished jersey so as to provide the desired angular disposition of the sleeves with respect to the body.

When knitting a sleeve or body portion in the form of a tube, knitting may take place on only one side of the machine in each traverse, and on completion of each traverse knitting will then be commenced in the reverse direction, using the same yarn carrier, only on the other side of the machine. Such a knitting method, usually referred to as "tubular" knitting, is described, for example, on pages 59 and 60 of the Dubied Manual. If each each traverse is complete, this produces fabric which, though knitted in a flat condition, is continuous across the ends of the traverse, and can be opened out into a tube, but if each traverse of the needles of one of the beds is reversed at an intermediate point in the bed an incomplete tube is produced, such as the body portion of a front-fastening style of jersey. If knitting is commenced with complete traverses in each direction and then after an appropriate number of rows the subsequent traverses are reversed at an intermediate point on one of the beds, a tube with an opening in part of its length is produced, and this could be used for a body portion of a jersey with a front opening at the neck. If the reversed traverses are progressively reduced, a V-neck style will result. In referring herein to a tubular portion or a portion knitted as a tube we include, where appropriate, both a complete tube and a tube with such a longitudinal opening.

It is also possible to knit a body portion or a sleeve portion as a tube by employing a second yarn carrier and traversing the two yarn carriers simultaneously in such a way that at the end of a traverse each yarn carrier crosses over and supplies yarn to the needles of the opposite bed. This method of knitting (often referred to as "double system" tubular knitting, as described on pages 107 and 108, illustrated, for example, on page 110 of the Dubied Manual) also produces fabric which is continuous across the end of the traverse and is thus in the form of a tube but the knitting is carried out at

twice the speed of the usual method because both faces of the flattened tube are knitted simultaneously.

The tubular body and sleeve portions may be arranged adjacent to each other either by widening the tubular portions until they are adjacent to each other or decreasing the lateral spacing apart of the second beds to place the tubular portions adjacent to each other.

The tubular sleeve and body portions may be knitted successively or, as is preferred, simultaneously. In the latter case one or two yarn carriers are required for each tubular portion according to whether the knitting is to be in single or double system. Machines equipped with several yarn carriers for knitting several separate pieces of fabric on one pair of beds are well known, as for example that illustrated on page 31 of the Dubied Manual and it is obviously possible to knit separate tubular portions on the main and auxiliary beds of a modified machine as described, using either single or double system.

When the tubular portions are arranged adjacent to each other they they may be positioned either so that the needles of the auxiliary beds carrying the innermost sleeve stitches are spaced one or more needle pitches from the respective needles of the main beds carrying the outermost body stitches, or at least one stitch on the front and back of a tubular portion at its edge adjacent to another tubular portion may be transferred to the needle carrying the adjacent stitch of the said other tubular portion, with decrease of the lateral spacing apart of the auxiliary beds so that the needles from which stitches have been transferred overlap the needles to which they have been transferred. Thus, for example, the innermost one or two stitches of a sleeve portion may be transferred to the needles of the main bed carrying the outermost one or two stitches of the body portion, on both the front and rear beds, and the lateral spacing apart of the auxiliary beds decreased by one or two needle pitches so as to overlap the needles from which stitches have been removed and those upon which they have been placed.

In the first case, if a yarn carrier is then made to traverse all the front beds in one direction and all the rear beds in the other direction in the usual way a small hole will occur in the knitted fabric between the four adjacent stitches of each sleeve portion and the body portion in the course in which the join takes place. This hole can be closed conveniently after knitting is completed by stitching in the end of the yarn from the yarn carrier which was withdrawn at this course, or the traverse of the carrier may be varied to reduce the hole.

In the second case a narrowing is effected of either the sleeve portions or the body portion at the jointing course and this leaves only a hole which is comparable in size with the normal holes between stitches in the knitted fabric.

By the method of this invention, a complete garment can be integrally knitted, virtually to its final shape, so that little or no seaming is required, and the invention includes such a garment. The wastage of cutting out shaped pieces and the labor of making up are thus substantially avoided.

Since in the present method separate needle beds are used for the tubular knitting of each sleeve portion and the body portion, it is not necessary to knit these portions simultaneously although such simultaneous knitting is preferred, where possible, since it reduces the time for producing a garment. The sleeve portions of course need not be the same length as the body portion, and for short sleeve styles, or full-length garments such as dresses, knitting of the sleeve portions will usually be commenced after an appropriate length of the body portion has been knitted.

Where trimmings of rib fabrics are required at the ends of the tubular body or sleeve portions these can be produced as pairs of flat strips of rib fabric the strips being arranged opposite to each other on a group of needles of a pair of opposed beds, and tubular knitting then being commenced. The availability of three pairs of beds enables two or more rib strips to be knitted simultaneously, and by lateral movement of the movable beds the rib strips can be placed opposite to each other.

When knitting trimmings or rib fabrics on a V-bed knitting machine having three pairs of beds, the beds are shifted firstly to arrange the rib trimmings in correct position for commencement of knitting of the tubular body and sleeve portions and secondly to bring about narrowing of those portions. It may happen during the narrowing movements of the beds that the previous movements involved in formation and location of the rib trimmings have brought the beds to positions such that they abut one another before the desired narrowing movements have been completed. In such a situation a plurality of inner needles of the auxiliary beds will be free of stitches and in order to overcome this disadvantage it is proposed to provide for removal of a portion of the inner end of at least one auxiliary bed on each side of the machine to such a position that the outer ends of the two auxiliary pairs of beds can be brought closer together.

Examples of the invention will now be described with reference to the accompanying drawings, in which:

FIGS. **1** to **3** are diagrammatic sketches, each showing an elevation and a plan, of three different V-bed knitting machines capable of performing the method of the invention;

FIGS. **4** to **13** are diagrammatic plans of knitting machines, showing various stages in the production of jerseys by the method of the invention; and

FIG. **1** shows diagrammatically in elevation and plan a flat bar V-bed machine having a pair of opposed needle beds **1**, which will be called the 'main' beds, and above these beds two pairs of laterally movable opposed beds **2**, **3**, which will be called the 'auxiliary' beds, which overlap the main beds **1**. To explain the alignment of the beds a needle **4** of one bed **1** and a needle **5** of a bed **2** on the opposite side are shown in their raised positions. It will be observed that the auxiliary beds **2** and **3** are disposed at such an angle to the beds **1**, that their needles **5**, **6**, when raised, enter the upper parts of the tricks of the main beds **1**, between the knock-over bits **7**, and it will thus be appreciated that for any needle of a bed **2** or **3** to knit, that bed must be positioned with its needle tricks aligned with the tricks of the bed **1** below it. When the needles **5** or **6** of a bed **2** or **3** are withdrawn, that bed can be moved laterally with respect to the beds **1**. The beds **1** can also be arranged to be moved laterally if required. It will also be observed that the disposition of the beds is such that knitting can take place either in structures formed between the needles **4** of the opposite main beds **1** or between the needles **4** of one main bed **1** and the needles **5** or **6** of an opposite auxiliary bed **2** or **3**, or between the needles **5** or **6** of the opposed auxiliary beds **2** or **3**, or in tubular form on the same combinations.

Provision is made for either the main beds **1** to be lowered, or the auxiliary beds **2** and **3** to be raised so that when the latter carry loops of knitted fabric they can be moved laterally without the loops fouling the knock-over bits **7** of the beds **1**.

The plan in FIG. **1** shows diagrammatically the three pairs of beds and the positions of their needles, the beds of each pair being positioned opposite to each other and the beds being symmetrically arranged with respect to each other, although, as mentioned, the beds **2** and **3** are movable from this position, and the beds **1** may also be movable.

FIG. **2** shows diagrammatically an elevation and plan of a different form of machine which is generally similar in arrangement to that shown in FIG. **1**, but in which the two pairs of auxiliary beds **2**, **3** above the beds **1** are disposed so that their needles **5**, **6** do not share the needle tricks of the main beds **1**, and the beds **2** and **3** carry their own knock-over bits **8**, **9**. The performance of this machine is broadly similar to that described in relation to FIG. **1**, but in this case there is no necessity for raising or lowering the beds in order to enable the beds **2** and **3** to be moved, since fabric with loops carried on the needles **5** or **6** will automatically be held clear of the knock-over bits **7** of the beds **1**.

FIG. **3** is a drawing of a similar machine in which the two pairs of auxiliary beds **2**, **3** are below the main beds **1**.

It will be noted that the plans are the same in each of FIGS. **1** to **3**, and FIGS. **4** to **13** show the same plans with the beds in

various positions according to the function being performed. Unless otherwise stated the operations described can be carried out on any of the machines shown in FIGS. 1 to 3. In FIGS. 4 to 13, the plans are drawn horizontally for convenience, and the beds shown uppermost are those at the rear of the machine whilst the front beds are shown lowermost. In each of FIGS. 4 to 13, when tubular knitting is referred to, it takes place from left to right of the drawing on the rear beds and from right to left on the front beds. It will be understood that the number of needles and stitches shown is purely diagrammatic in order to simplify the drawings, and does not in any way relate to the number of stitches in a garment.

In the following description, reference will be made to the transferring of stitches between various beds and between needles on the same bed. Various known methods can be used for such transfer and the devices used are not shown in FIGS. 1 to 3. Separate transfer elements may be used, such as hook-like elements mounted separately from the beds and capable of being moved to lift stitches from needles of one bed and place them either on other needles of the same bed, or on needles of another bed. With such transfer elements on flat bar V-bed machines the transfer of stitches may be effected readily between needles on the opposite outer beds in the machines shown in FIGS. 1 to 3, and also between needles on the outer and inner beds on the same side, but not between needles on opposite inner beds. This latter operation can, however, be effected in two stages, transferring first from one inner bed needle to a needle of an outer bed on the opposite side, and thence from that bed to a needle of an inner bed on that side. Instead of using separate transfer elements, special needles may be used which enable stitches to be transferred directly from one needle to another. One example is the above-mentioned needle described on page 119 of the Dubied Manual which has a slot in its underside leading to a chamfered part of its side face just below its shoulder. This needle can be raised somewhat further than usual by means of transfer cams in the cam box similar to that shown at the right-hand side of illustration 247 on page 139 of the Dubied Manual so that a stitch held on it will rest on its shoulder. A needle of an opposite bed can then be raised and will enter the groove, by which it is guided to the chamfered part of the side face which enables it to pass the first needle. If the first needle is then retracted the stitch which it carries will be transferred to the needle of the opposite bed. With such needles, stitches may be transferred in one operation between needles of any opposite beds in the machines shown in FIGS. 1 to 3. To transfer between different needles of the same bed, or between needles of inner and outer beds on the same side of the machine, however, requires two stages of transfer, transferring first to a needle of an opposite bed and then back to the needle which is to receive the stitch, with lateral movement of one of the beds between the two stages as necessary.

Another type of special needle is a needle with a spring loop-spreader device either secured to it or mounted alongside it in the same trick of the needle bed. One such loop-spreader device resembles a pelerine point and comprises a cranked spring tongue the point of which rests against the shank of the needle just above its shoulder region and which is shaped to stand clear of the side of the shoulder, forming a loop through which the loop of another needle can pass. Such a needle is known for use in the manner just described for the grooved needle to transfer stitches between needles of opposite beds, the loop-spreader device expanding a stitch on the needle when the needle is raised sufficiently to cause the stitch to rest on its shoulder. The opposite needle is then raised to penetrate the loop formed by the cranked spring and the expanded stitch, and on retracting the first needle the stitch is left on the opposite needle. Such needles can also be used to transfer stitches between the outer and inner beds on the same side in the machine shown in FIG. 1, provided that the beds are appropriately inclined to each other.

FIGS. 4 to 13 show successive stages in the production of a jersey having strips of rib knitting at the ends of the body and sleeves, in the conventional manner. Since rib knitting requires the use of needles of two opposed beds, these rib strips cannot be produced in tubular form, but are knitted as separate strips on different parts of the various beds and the beds are then moved to place the strips opposite to each other before tubular knitting commences.

FIG. 4 illustrates one possible sequence of operations for knitting and positioning these rib strips. In view A the rear beds have all been moved laterally to the left and the front beds have all been moved laterally to the right from the positions shown in FIGS. 1 to 3 so that the center parts of the main beds 1 which are to carry rib strips for the body portion of the jersey are arranged opposite to auxiliary beds 2 and 3, and the front bed needles are staggered by half a needle pitch with respect to the rear bed needles so that rib knitting can take place. Two rib strips 10 for the body portion of the jersey are knitted between needles 4 at the center parts of the main beds 1 and needles 5 and 6 of the auxiliary beds 2 and 3 which are positioned opposite to these parts. After an appropriate length has been knitted all the front beds are moved half a needle pitch to the left so as to place the needles opposite to each other as shown in view B and the stitches carried on the needles 5 and 6 are transferred to the opposite needles 4 of the main beds 1 so that the rib strips 10 are carried only on those beds. The rear main bed 1 and the rear auxiliary bed 2 are then moved together to the right until the rib strip 10 carried on the rear bed 1 is located at the center of the machine. The front main bed 1 and the front auxiliary bed 3 are moved together to the left to place the front main bed 1 half a needle pitch from this central position. The front auxiliary bed 2 is moved to the right by half the needle pitch. This position is shown in view C and places the needles 5 and 6 of the front and rear auxiliary beds, which are to carry rib strips for the sleeve portions of the jersey, opposite but staggered by half a needle pitch from spare needles in the respective main beds 1, and four rib strips 11, for the two sleeves, are knitted between each auxiliary bed 2 and 3 and the appropriate spare needles of the main beds 1. When an appropriate length of these rib strips 11 has been knitted, all the front beds are moved to the left by half a needle pitch to place the needles carrying each rib strip 11 opposite to each other and the stitches of each rib strip 11 are then transferred from the needles 4 of the main beds to the appropriate needles 5, 6 of the auxiliary beds, as shown in view D. The front auxiliary bed 2 and the rear auxiliary bed 3 are then each moved outwardly to place the rib strips 11 carried by each, opposite to the corresponding rib strip on the opposite auxiliary bed. The two pairs of rib strips 11 for the sleeve portions and the pair of rib strips 10 for the body portion are then positioned opposite to each other (as shown in view E) ready for tubular knitting of the sleeve and body portions to commence.

It will be appreciated that the views are diagrammatic, and the number of needles and stitches shown does not relate to the number actually employed in a practical machine for manufacturing jerseys.

FIG. 5 shows stages in the tubular knitting of the body and sleeve portions of the jersey. View A shows the first stage, in which three yarn carriers are used, traversing, respectively, the two pairs of rib strips 11 on the auxiliary beds 2 and 3 and the pair of rib strips 10 on the main beds 1, in tubular knitting, so as to produce, respectively, a tubular body portion 12 and two tubular sleeve portions 13.

As tubular knitting continues, these portions are widened by needle introduction at appropriate courses of knitting according to the shape and size of jersey required. View B shows the condition after an appropriate length has been knitted for the sleeve and body portions, and each has been widened by the introduction of two needles on the respective front and rear beds. To place the tubular portions adjacent to each other ready for joining, the auxiliary beds 2 and 3 are moved laterally inwardly by one needle pitch, as shown in view C. The tubular portions could, of course, be knitted more than one needle apart, and in this case the auxiliary beds 2 and 3

would be moved an appropriate number of pitches to place the tubular portions adjacent to each other.

FIG. 6 shows an alternative method of arranging the tubular portions adjacent to each other, simply by widening. View A is similar to the corresponding view of FIG. 5 except that at the start, the auxiliary beds 2 and 3 have been moved laterally inwardly by one pitch. View B shows the situation when each of the tubular portions has been widened as before by the introduction of two needles on each bed, at which stage the innermost stitches of the sleeve portions 13 are spaced only one needle pitch from the outermost stitches of the body portion 12, as was the case in view C of FIG. 5.

Since clearance has to be provides for the yarn carriers, the last stage of widening in FIG. 6 cannot be performed with simultaneous knitting of the body and sleeve portions. It is performed by completing the last stage of widening on either the sleeve portions or the body portion, then taking the needles carrying these portions, or this portion, out of action, and continuing knitting the remaining portion or portions, and effecting the last stage of widening thereon to place the portions adjacent to each other.

FIGS. 7 to 9 show various ways of joining the three tubular portions after they have been arranged adjacent to each other by the sequence of operations shown in FIG. 5 or FIG. 6.

View A of FIG. 7 shows the three tubular portions adjacent to each other and spaced apart by one needle pitch. Two of the yarn carriers are withdrawn, and knitting is continued with the remaining carrier. For example, the yarn carries used for knitting the tubular body portion 12 and the right hand tubular sleeve portion 13 are then withdrawn, and the remaining yarn carrier is caused to traverse all the beds, the cam system of the machine being set to cause all the needles carrying stitches to knit during such traverse, knitting from left to right along the rear beds and from right to left along the front beds in the usual manner. This joins the three tubular portions with a single tubular portion 14 which will form the top part of the jersey. View B of FIG. 7 shows the joining course. By this method of joining, a small hole will be left between the inner edges of the sleeve portions and the outer edges of the body portion, that is at the underarm position in the jersey. This hole may be closed when knitting is completed, using, for example, the ends of the yarns originally used for knitting the body portion and the right hand sleeve portion.

FIG. 8 shows a method for joining the tubular body and sleeve portions without producing a distinct hole at the underarm. View A of FIG. 8 (as in view A of FIG. 7), shows the tubular portions in condition ready for joining. Two yarn carriers are withdrawn as described with reference to FIG. 7. In the first course of knitting with the single yarn carrier, the cams are set so that knitting is from left to right first along the rear auxiliary bed 2 needles carrying the left hand sleeve portion 13, then along the front main bed 1 needles carrying the body portion 12, and then along the rear auxiliary bed 3 needles carrying the other sleeve portion 13, and on the reverse traverse from right to left along the front auxiliary beds carrying the sleeve portions and the rear main bed carrying the body portion, as shown in view B. This produces a cross of yarn where the small hole would otherwise appear at the underarm position of the garment. Two courses may be knitted in this manner, to produce a double cross of yarn, and then knitting continues in the usual way with the cams reset to knit on all the rear beds from left to right and all the front beds from right to left, in the usual manner, as shown in view C, producing a single tubular portion 14 which will form the top part of the jersey.

FIG. 9 illustrates a further method of avoiding a hole at the underarm, by the use of tuck stitches. View A, as before, shows the tubular body portion 12 and sleeve portions 13 in condition for joining, and the needles of all the rear and front beds which carry stitches are identified by the letters *a* to *o*. Views B and C, which show the joining course with one yarn carrier, are drawn with the traverse from left to right separately from the traverse from right to left for clarity, but it will be understood that these views together show one complete course of knitting. At the commencement of the traverse from left to right, shown in view B, all the front beds are moved laterally to the right by half a needle pitch relative to the rear beds. Knitting is commenced along the rear auxiliary bed 2, and after knitting all the stitches a tuck stitch is formed on the needle *d* of the opposite auxiliary bed 2, followed by knitting on the needle *e* of the rear main bed 1 the first stitch of the body portion 12. A tuck stitch is then knitted on the needle *e* of the front main bed 1 after which the remainder of the stitches of the body portion are knitted on the rear main bed 1. A further tuck stitch is then made on needle k of the front main bed 1 followed by knitting the first stitch of the sleeve portion 13 on the needle *l* of the rear auxiliary bed 3. A tuck stitch is made on the needle *l* of the front auxiliary bed 3 after which the remainder of the stitches of the sleeve portion 13 on the rear auxiliary bed 3 are knitted. The reverse traverse is exactly opposite to this, as shown in view C, and it will be appreciated that in this traverse the tuck stitches made in the previous traverse are knitted in with the stitches which were already carried on the same needles. After the jointing course shown in views B and C, the front beds 1, 2 and 3 are returned to their original position opposite the respective rear beds and the cams are re-set to knit in the usual way along the rear beds from left to right and along the front beds from right to left as shown in view B producing, as before, the single tubular portion 14 for the shoulder region of the jersey. In the first traverse along the rear beds, the tuck stitches produced on the rear beds as shown in view C are knitted in with the loops which were already carried on the respective needles. Thus several cross-overs of yarn are produced at the join, that is at the underarm position in the finished garment, thus avoiding any hole appearing at this point.

FIG. 10 shows another method of joining the tubular portions so as to avoid a hole, in which when the tubular portions are arranged adjacent to each other, their end stitches are overlapped and transferred so that the four stitches at the adjacent edges of a sleeve portion and the body portion are carried on two needles, on either the main or the auxiliary beds according to the style of jersey required. On the left hand side of the views in FIG. 10 is shown the transfer of sleeve portion stitches to the needles of the main beds 1 carrying the body portion stitches, and on the right hand side is shown in the transfer of body portion stitches to the needles of the auxiliary second beds 3 carrying sleeve portion stitches.

View A is similar to view A in the previous FIGS. 7, 8 and 9, and shows the tubular portions in the condition ready for joining, obtained by the process described with reference to either FIG. 5 or FIG. 6. The arrows X show the intended transfer of stitches from the needles *d* of the auxiliary beds 2 to the needles *e* of the main beds 1, and the arrows Y show the intended transfer from the needles *k* of the main beds 1 to the needles *l* of the auxiliary beds 3.

The method by which the transfer is carried out depends upon the facilities available on the machine being used. The various known methods available have already been described. For transferring on a machine of the type shown in FIG. 2 or FIG. 3 equipped with loop-spreader devices as described above, for example, the auxiliary beds 2 and 3 are each moved laterally inwardly by one needle pitch, as shown in view B, to cause the stitches which are to be transferred to overlap the needles to which they are to be transferred, and the stitches are then transferred, as shown in view C. The transfers may, as previously mentioned, be either direct between the respective needles, or by the intermediate action of needles of other beds or of separate transfer elements, depending upon the facilities provided in the machine. The needles *d* of the auxiliary beds 2, and the needles *k* of the main beds 1, from which the stitches have been transferred, are taken out of action, and the yarn carriers used to knit the body portion 12 and the right hand sleeve portion 13 are removed.

View B shows the first course of knitting after the transfer, with one yarn carrier traversing all the needles which carry

stitches, and it will be seen that not only are the three tubular portions joined into a single tubular portion 14 to form the shoulder region of the jersey, but also there has been a narrowing of the wales which originally formed the sleeve portion 13 on the left hand side, and of the wales which originally formed the body portion 12 on the right hand side.

FIGS. 11 to 13 show various ways in which the wales can be reduced to narrow the jersey after the joining stage, for shaping the top part and causing the sleeve portions 13 to lie at an angle to the body portion 12 in the finished jersey. The particular way in which the narrowing is carried out will depend upon the shape of the top part required and also upon the style of jersey required. In each of FIGS. 11 to 13 the wales are reduced by one on the front and back of each side of the garment, and the auxiliary beds 2 and 3 are moved inwardly by one needle pitch before the next course of knitting. FIG. 11 shows in view A at the left hand side, the way in which stitches can be transferred from the needles which originally formed the inner wale of the sleeve portion 13 to the needles carrying the stitches of the adjacent wales which originally formed the outer edge of the body portion 12. The transfer of the stitches can, as already described, be effected either directly, or through the intermediary of a transfer element, or an introduced needle of the opposite bed 2. The beds 2 are moved laterally inwardly before, during or after the transfer, depending upon how the transfer is made, by one needle pitch, giving the situation illustrated at the left hand side of view B. The needles of the beds 2 from which the stitches have been transferred are taken out of action.

Repeated reduction of the wales in this manner causes the sleeve wales to blend successively into the outermost body wales producing style lines along the outermost body wales and causing the sleeve to lie at an angle to the body in the finished jersey, with the appearance of an attached sleeve.

On the right hand side of view A is shown the transfer of stitches from the needles of the beds 3 which formed the innermost wales of the sleeve portion outwardly on to the adjacent needles, the beds 3 being moved inwardly to take account of the sleeve narrowing which results, giving the condition shown at the right hand side of view B.

If the garment is repeatedly narrowed in this manner, again the body wales remain constant but in this case the sleeve wales are successively reduced and a style line is produced parallel with the outermost of the wales forming the body. Again, this narrowing causes the sleeve to lie at an angle to the body in the finished jersey.

FIG. 12 illustrates shaping in which the needles which originally formed the body wales are reduced in number whilst those which originally formed the sleeve portions continue knitting. On the left hand side of view A is shown the transfer of loops from the outermost needles which originally formed the body portion to the needles of the beds 2 carrying the innermost wales which originally formed the sleeve portion. The left hand side of view B shows the result of the transfer.

On the right hand side of view A is shown a transfer of the stitches from the needle which originally formed the outermost wale of the body portion inwardly on to the adjacent needles of the bed 1, and the right hand side of view B shows the result of the transfer. Both the transfers shown in FIG. 12 are accompanied by inward movement of the beds 3 to take account of the reduction of the number of needles which originally held the body portion, the needles from which the stitches have been transferred are taken out of action, and a further course or courses is/are then knitted on the remaining needles.

Repeated narrowing in this way produces a style line of successive narrowings lying at an angle to the body wales which depends upon the frequency of narrowing. The sleeve wales are parallel to this line, so that again the sleeves lie at an angle to the body in the finished jersey.

It will be appreciated that if successive narrowing of the top part of the jersey take place, the auxiliary beds 2 and 3 gradually approach each other, and with some jerseys they may meet before the narrowing is completed. The shaping of the jersey may be completed from this point by successively withdrawing the outermost needles of the auxiliary beds 2 and 3 so as to narrow the outer edges of the tube of fabric, which forms the top part of the garment, to the appropriate number of stitches for the neck, or, if further reduction of the wales at the junction between the sleeve and body portions is required, the auxiliary beds 2 and 3 may be moved outwardly, the stitches they carry being transferred inwardly to other needles of the same beds. An example of this operation is illustrated in FIG. 13 in which the needles which originally formed both the body portion and the sleeve portions have been reduced and the auxiliary beds 2 and 3 abut in the middle of the machine. As shown in view A the three stitches carried on the needles of each of the beds 2 and 3 are all moved inwardly by one needle pitch, and the beds 2 and 3 are moved outwardly by one needle pitch to the condition as shown in view B. The transfer of the stitches may be by any of the methods already described. This operation has no effect on the number of stitches in the garment, but space has been provided for further inward movement of the beds 2 and 3. The beds 2 and 3 could be moved outwardly by more than one needle pitch in such an operation.

It will be appreciated that the systems just described with reference to the drawings are only examples and that shaping could be effected by narrowing in other sequences to achieve the desired angular disposition of the sleeves with respect to the body and produce the desired style in the finished jersey.

For example, if both the body wales and the sleeve wales are reduced by a combination of the methods described with reference to FIGS. 11 and 12, a Raglan sleeve style can be produced.

After the top part of the jersey has been narrowed as required, a collar portion may be knitted on, or the garment may be ended at this stage and a separate collar be attached afterwards. As previously mentioned by casting off stitches at the center part of the main beds 1 during the knitting of the shoulder region and by reversing the traverse of the yarn carrier where the stitches are cast off a V-neck or other style could be produced. Indeed the traverse of the yarn carrier on the beds 1 may be reversed in the center part of the garment during the whole knitting operation so as to produce an open-fronted style of jersey.

Although the knitting sequence described and illustrated includes commencement with a 1 × 1 rib section it will be appreciated that this is not essential and other ribs or other conventional methods of starting, such as welt turning or a French welt may be used.

The tubular body and sleeve portions may be widened by needle introduction or narrowed by needle withdrawal in the conventional manner to produce shaping before they are joined.

What is claimed is:

1. A method of knitting a jersey comprising knitting a body portion of said jersey in the form of a tube on the needles of the main beds of a modified flat bar V-bed knitting machine having a pair of main beds and two pairs of auxiliary beds, knitting two separate sleeve portions in the form of tubes, one sleeve portion being knitted on each of the two pairs of auxiliary beds of the knitting machine which auxiliary beds are laterally movable relative to and capable of overlapping the main beds, arranging the body and sleeve portions adjacent to each other, traversing all the needles carrying stitches with a yarn carrier so as to join the body and sleeve portions and, during subsequent knitting, before at least some of the courses, reducing the number of wales in at least one of the portions by transferring stitches of wales of the portion to be reduced, adjacent the other portion, to the needles carrying adjacent wales and decreasing the lateral spacing apart of the pairs of auxiliary beds by a number of needle stitches equal to the number of wales by which the portion has been reduced.

2. A method according to claim 1 wherein said body and sleeve portions are arranged adjacent each other by widening these portions until they are adjacent each other.

3. A method according to claim 1 wherein said body and sleeve portions are arranged adjacent each other by decreasing the lateral spacing apart of the sleeve portions.

4. A method according to claims 2 wherein the step of arranging the body and sleeve portions adjacent one another is carried out so that the needles carrying the innermost sleeve stitches are spaced one or more needle pitches from the needles carrying the outermost body stitches.

5. A method according to claim 2 wherein the step of arranging the body and sleeve portions adjacent one another is carried out so that at least one stitch on the front and one stitch on the back of each of the portions at an edge of the portion adjacent another portion is carried on a needle carrying a stitch of the said other portion.

6. A method according to claim 1 wherein at least one of the tubular body and sleeve portions is knitted with an end trimming of rib fabric produced as a pair of flat strips of rib fabric, each strip being knitted on needles of one of the main beds and on needles of one of the auxiliary beds and subsequently transferred to needles of one bed, the other strip of the pair being similarly knitted on the other main bed and the opposite auxiliary bed and transferred to the needles of the bed forming a pair with the said one bed and the two strips being arranged opposite one another for subsequent knitting of the associated tubular portion.

7. A method according to claim 6 wherein the knitting of the sleeve portions is commenced in such positions in the lateral direction of the pairs of auxiliary beds that a plurality of needles at the inner end of at least one auxiliary bed on each side of the machine do not receive stitches of the sleeve portions and after production of the end trimmings of rib fabric a portion of the inner end of at least one auxiliary bed on each side of the machine containing at least some of the said plurality of needles is moved to a position such that the outer ends of the two pairs of auxiliary beds can be brought closer together.

* * * * *