United States Patent

Mason et al.

[15] **3,649,896**

[45] **Mar. 14, 1972**

[54] CONTROL CIRCUITS FOR AN ELECTRIC TRACTOR

[72] Inventors: **William B. Mason,** Schenectady; **Douglas R. Houst,** Pattersonville, both of N.Y.

[73] Assignee: **General Electric Company**

[22] Filed: **Feb. 12, 1970**

[21] Appl. No.: **10,863**

[52] **U.S. Cl.**.....**318/387,** 318/549

[51] **Int. Cl.**.....**H02p 1/00**

[58] **Field of Search**.....318/386, 387, 400, 405, 406, 318/421, 422, 546, 549

[56] **References Cited**

UNITED STATES PATENTS

2,452,127	10/1948	James	318/422
2,602,888	7/1952	Audier	318/400
3,231,809	1/1966	Greer	318/400
3,390,318	6/1968	Gilbert	318/422

Primary Examiner—Bernard A. Gilheany
Assistant Examiner—Thomas Langer
Attorney—Walter C. Bernkopf, Julius J. Zaskalicky, Frank L. Neuhauser, Oscar B. Waddell and Joseph B. Forman

[57] **ABSTRACT**

The main current conduction path of a controlled rectifier and a starting network therefore are connected in parallel across a source of unidirectional potential through a single pole, double throw switch. With the switch in the start position with the pole engaging one contact the starting network is connected in circuit with the source of operating potential and in the other position with the pole engaging the other contact, circuit is completed through the controlled rectifier. The triggering voltage developed by the starting network decays rapidly with time the starting network is out of circuit. Accordingly, after conduction has been established in the controlled rectifier by switching the pole of the switch from the start to the operate position, should conduction be interrupted by a safety switch in the main conduction circuit of the controlled rectifier conduction cannot be reestablished therein by simply closing the safety switch but requires the return of the single pole, double throw switch to the start position to establish triggering potential for the controlled rectifier.

8 Claims, 6 Drawing Figures

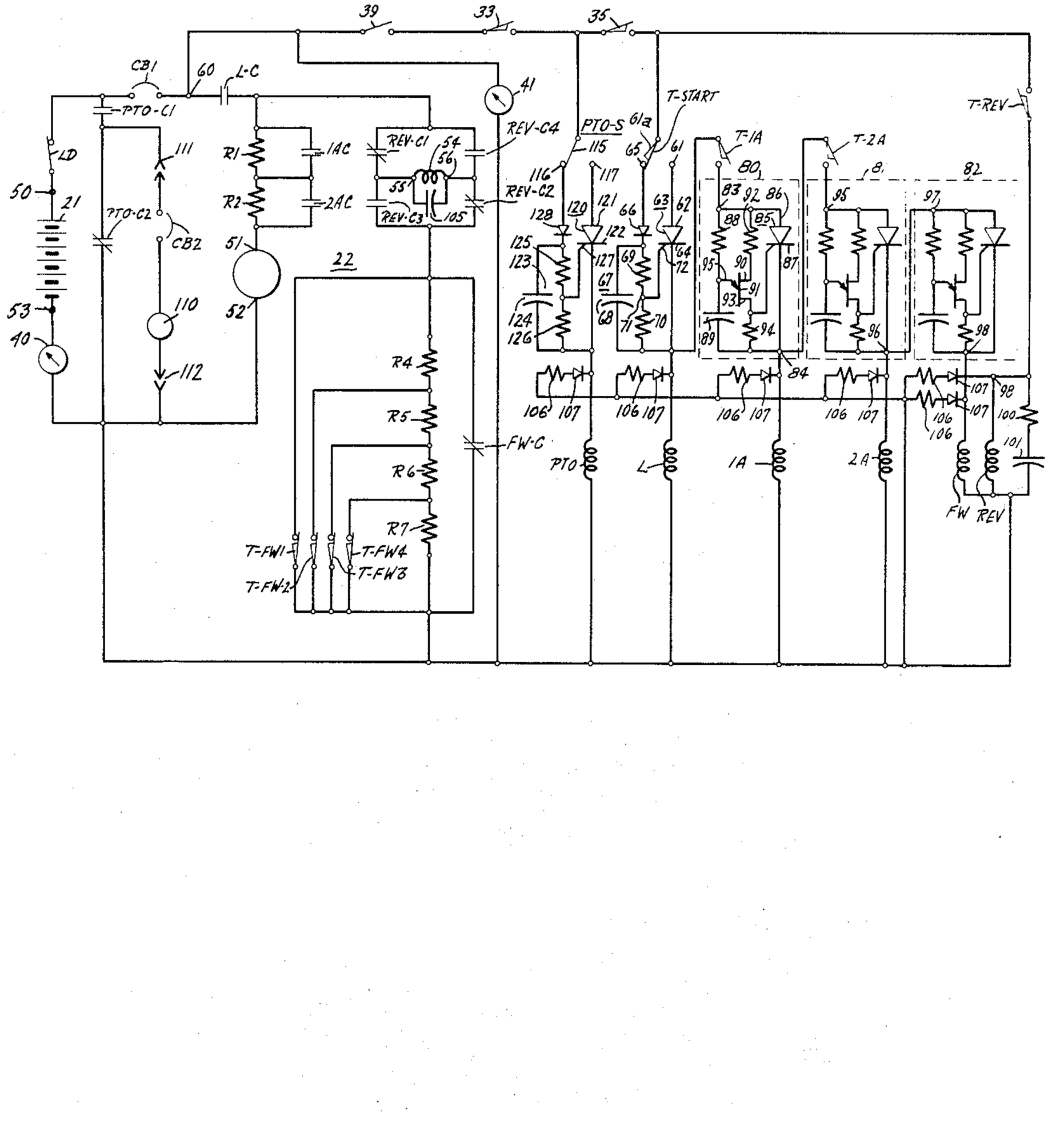

Fig. 1.

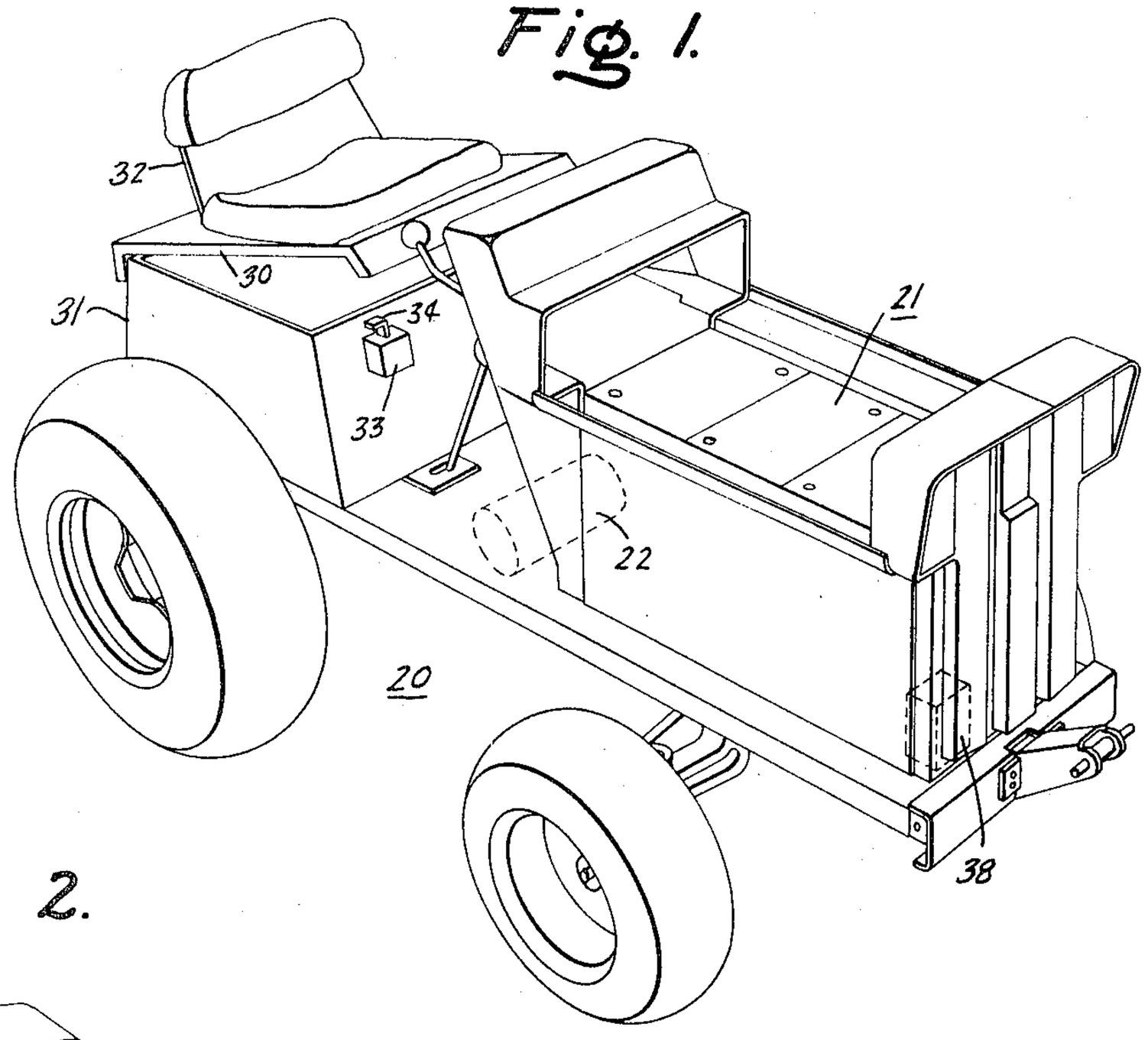

Fig. 2.

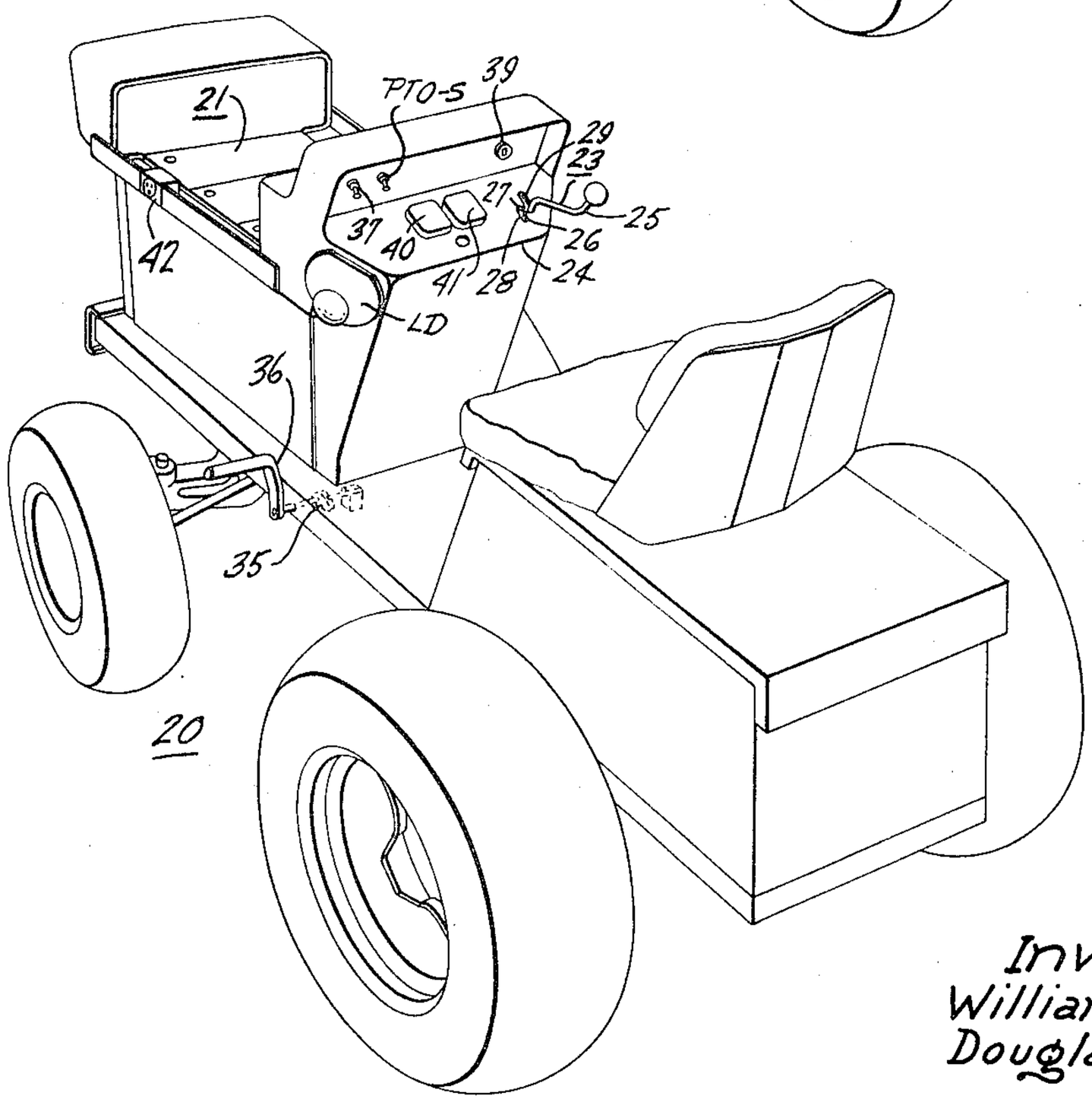

Inventors:
William B. Mason,
Douglas R. Houst,

by Julius J. Zaskalicky
Their Attorney.

Fig. 3.

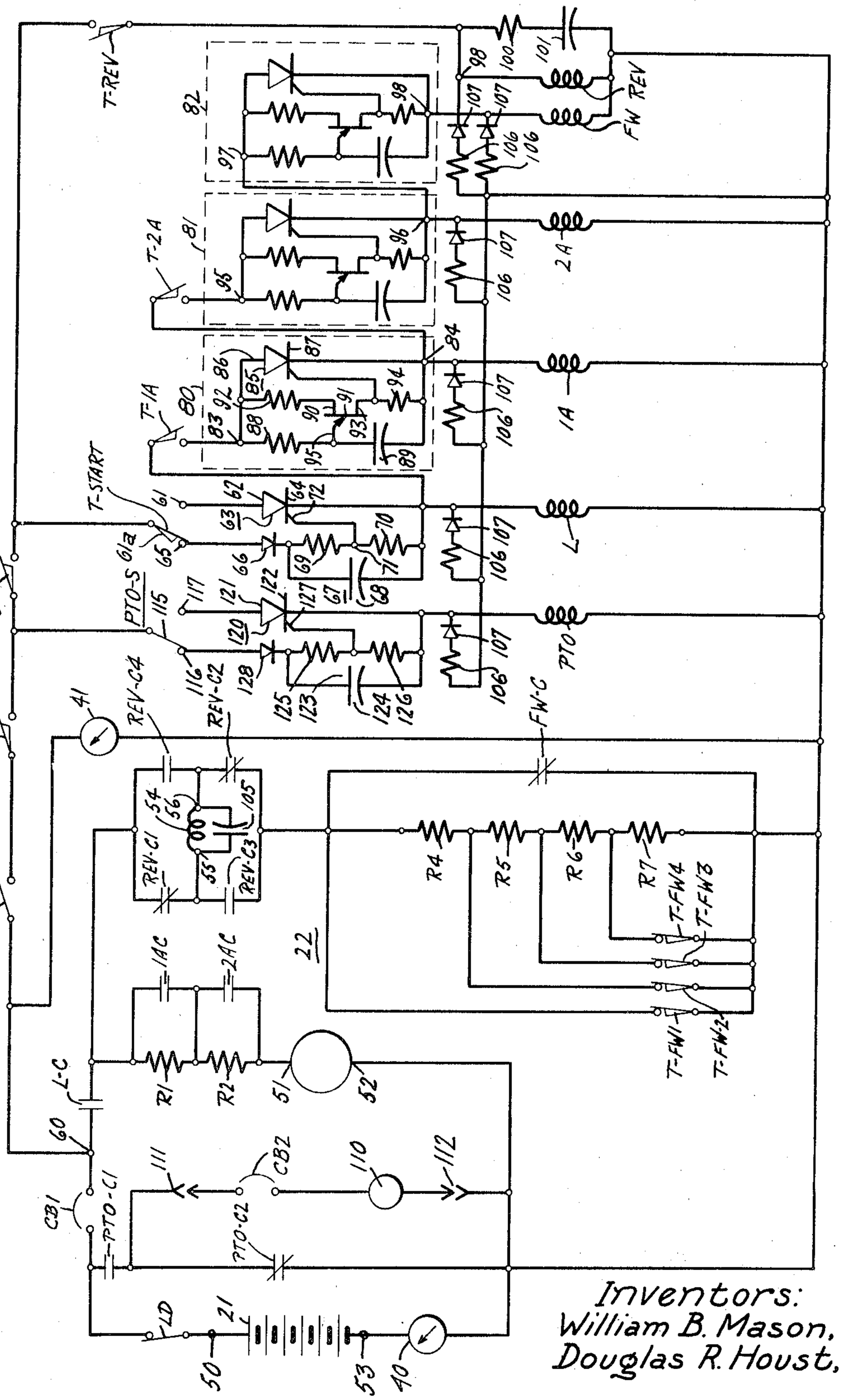

Inventors:
William B. Mason,
Douglas R. Houst,

by Their Attorney.

Fig. 4.

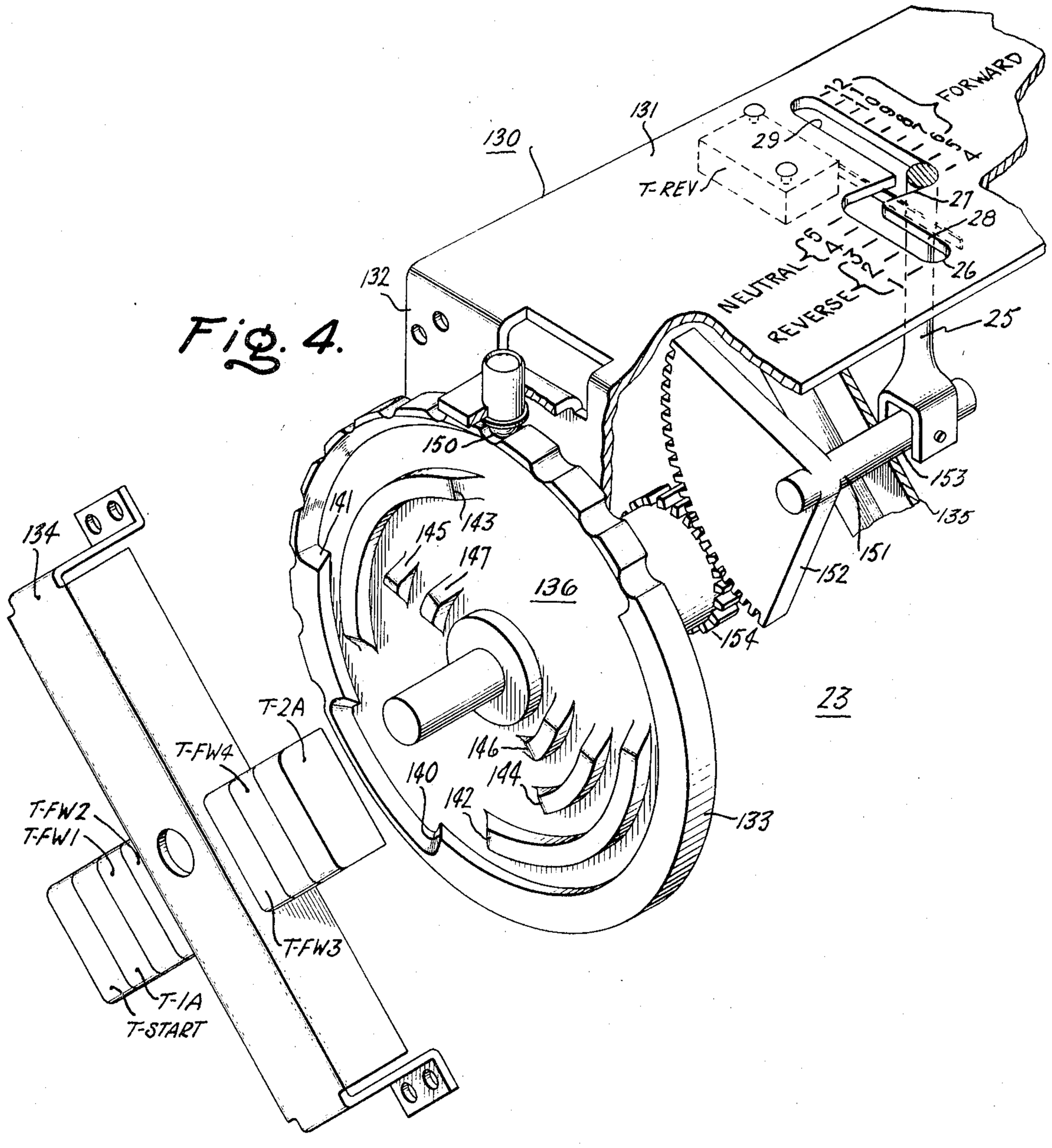

Inventors:
William B. Mason,
Douglas R. Houst,

by Their Attorney.

Fig. 6.

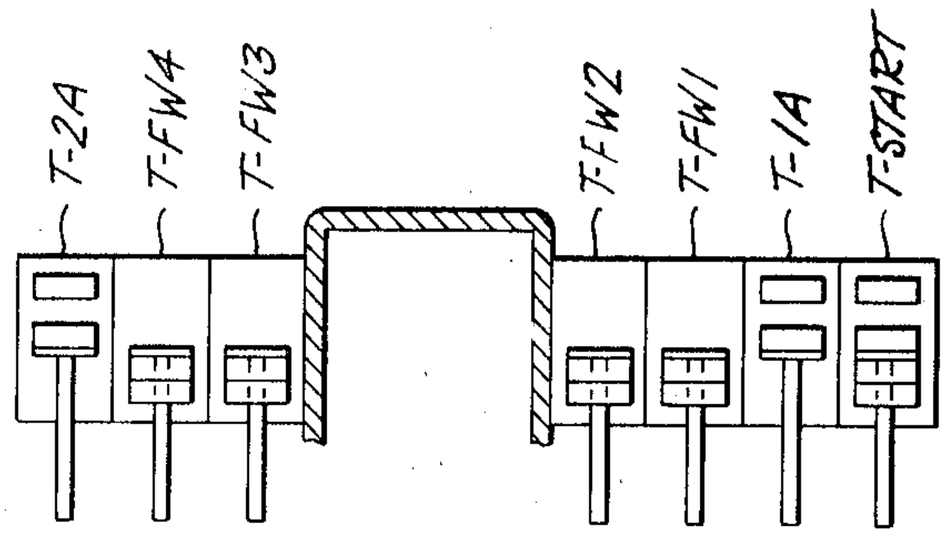

Fig. 5.

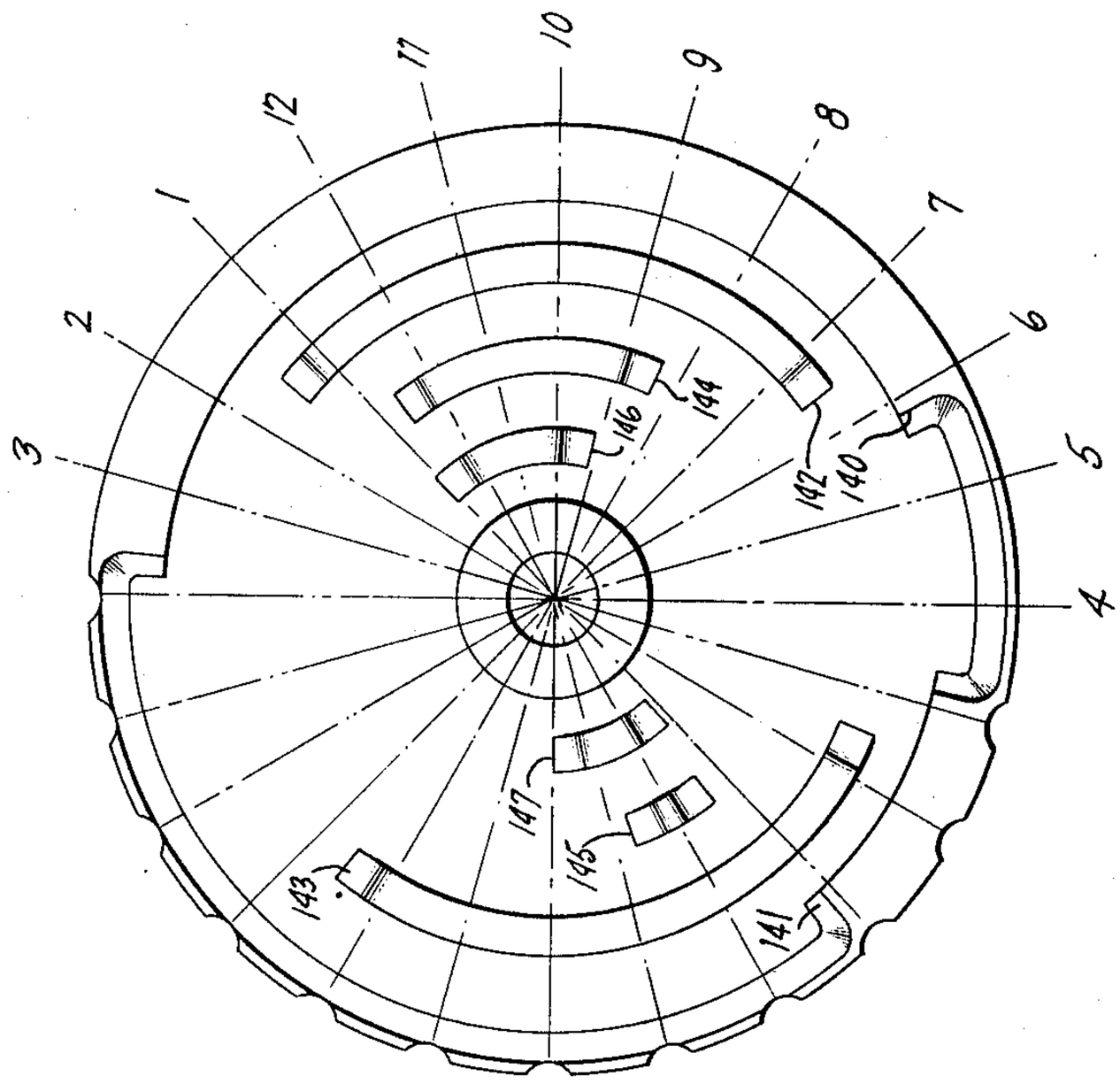

Inventors:
William B. Mason,
Douglas R. Houst,

by [signature]
Their Attorney.

CONTROL CIRCUITS FOR AN ELECTRIC TRACTOR

The present invention relates to control circuits for electrical apparatus and in particular to circuits for starting, stopping and controlling the operation of an electrically powered tractor and of auxiliary electrical apparatus for use in connection therewith.

An object of the present invention is to provide improvements in the electrical circuits for an electrically powered tractor and for the auxiliary electrical apparatus to be used in connection therewith.

Another object of the present invention is to provide particular kinds of electrical components and locate such components on the tractor and in the electrical circuits thereof to provide maximum operator safety, ease of operation and superior performance.

A further object of the present invention is to provide electrical circuits which enable reliable starting, stopping and operation of the tractor and the accessories thereof.

In carrying out the invention as applied in an illustrative embodiment thereof, there is provided a source of unidirectional voltage having a positive terminal and a negative terminal. Also provided are a silicon controlled rectifier having a cathode, an anode, and control or gate electrode and a starting network for the controlled rectifier having an input circuit and an output circuit for developing in the output circuit thereof a unidirectional control voltage in response to another unidirectional voltage applied to the input circuit thereof.

Means are provided for coupling the control voltage to the control electrode to cathode circuit of the silicon controlled rectifier to render the device conductive when operating voltage is applied to the anode to cathode circuit of the controlled rectifier. The time constant of the starting network is arranged such that the control voltage decays rapidly to a value insufficient to initiate conduction in the control rectifier when the unidirectional voltage applied to the input circuit of the network is removed. A single pole, double throw switch is provided for alternately connecting the main discharge circuit of the control rectifier and the input circuit of the starting network in circuit between the terminals of the source of unidirectional potential. Accordingly, when the starting network is switched out of circuit and the anode to cathode circuit of the controlled rectifier is switched into the circuit across the terminals of the source conduction occurs in the controlled rectifier and concurrently the control voltage in the output circuit of the network decays to a value insufficient to initiate conduction in the control rectifier. A relay is provided in the anode to cathode circuit of the controlled rectifier which actuates a load circuit as long as conduction exists in the anode to cathode circuit. A safety switch is provided in the circuit from the source of voltage to the silicon controlled rectifier for interrupting current flow in the circuit. Accordingly, when the anode to cathode circuit is interrupted, reestablishing the circuit between the terminals and the anode to cathode circuits of the controlled rectifier does not establish current flow in the controlled rectifier.

The features of our invention which we desire to protect herein are pointed out with particularity in the appended claims. The invention itself, however, both as to its organization and method of operation together with further objects and advantages thereof may best be understood by reference to the following description taken in connection with the accompanying drawings wherein:

FIG. **1** is a front perspective view of an electric tractor embodying the invention showing particularly the location of the electrical components of the electrical circuits of the tractor.

FIG. **2** is a rear perspective view of the electrical tractor of FIG. **1**.

FIG. **3** is a schematic diagram of the control circuits of the present invention.

FIG. **4** is an exploded perspective view of the speed control assembly for the electric tractor of FIGS. **1**, **2** and **3**, showing the switches thereon and the manner of their actuation.

FIG. **5** is a plan view of the cam wheel of the speed control assembly of FIG. **4** showing the various positions thereof.

FIG. **6** is a plan view of the electrical switch elements of the speed control assembly of FIG. **4** useful in explaining the operation thereof.

Referring now to FIGS. **1** and **2**, there is shown an electrical tractor **20** on which are mounted the various electrical components thereof. The construction of the tractor is described and claimed in a copending patent application Ser. No. 100,866 (RD–3523) assigned to the same assignee of the present invention. The source of unidirectional operating voltage **21** is a group of storage batteries located in a forward compartment on the main chassis member of the tractor and also in a rear battery compartment underneath the seat of the tractor. An electric motor **22** for driving the rear wheel assembly of the tractor is secured to the underside of the chassis member and is coupled mechanically to the rear wheel assembly. A speed control assembly **23** is provided on a centrally located upright bulkhead member **24** for starting, stopping and controlling the speed and direction of the electrical motor **22**. As shown in greater detail in FIG. **4** the speed control assembly comprises a lever **25** which is movable in a slot **26**. The slot has a generally horizontal portion **27**, a rearward extending portion **28** and a forward extending portion **29**. The control lever **25** has **12** positions shown so marked adjacent the slot **26**. Positions **4** and **5** represent neutral positions, positions **6** through **12** represent various forward speed positions, positions **3** to **1** represent various reverse speed positions. Associated with the control lever **25** are eight switches, seven of which are shown in schematic form in FIG. **6**, and the eighth of which is shown in dotted outline in FIG. **4**. The switch elements of FIG. **6** and FIG. **4** starting at the top of the assembly along with their designation and an indication of kind are respectively the following:

RD–3527

Description of Switch	Kind	Designation
Second Acceleration Switch	Normally open	T–2A
Field Weakening Switch **4**	Normally closed	T–FW4
Field Weakening Switch **3**	Normally closed	T–FW3
Field Weakening Switch **2**	Normally closed	T–FW2
Field Weakening Switch **1**	Normally closed	T–FW1
First Acceleration Switch	Normally open	T–1A
Starting Switch	Single Pole Double Throw	T–Start

The eighth switch which functions as a speed reversing switch is a normally opened switch and is designated T-REV.

Also shown on the member **24** is a power takeoff switch designated PTO consisting of a single pole, double throw switch for operation of auxiliary apparatus such as lifts, mowers, and the like. A disconnect switch designated LD for rapid disconnect of the circuits of the tractor from the source of voltage is located on the member **24**. The seat support member **30** is hinged in the rear to support member **31** and is spring biased upward so that when an operator is not sitting on the seat **32** secured to member **30**, the seat is inclined upward. A switch **33** is mounted to the front side of seat support member **31** and has a plunger **34** engaging the member **30** so that when the seat is up a pair of contacts are opened and when the seat is down a pair of contacts are closed. Another switch **35** is located adjacent the brake pedal and assembly **36** has a normally closed pair of contacts which are opened by actuation of the brake pedal thereof. A switch **37** is provided for operation of winch **38** for lift assembly **38** of the tractor. Also a key switch **39** for connecting power to the electrical circuits is provided. An ammeter **40** and a volt meter **41** are also located on the member **24**. An outlet **42** is located on the battery compartment of the tractor for insertion of cables from an auxiliary apparatus to be used in connection with the tractor.

The electrical components, the locations of which are described above in connection with FIGS. **1** and **2** are shown in the overall electrical schematic of the electrical tractor of FIG. **3** to which reference is now made and are designated by the same reference symbols as used in connection with FIGS. **1** and **2**. Also shown in the circuit of FIG. **3** are a plurality of

relays and their contacts. Relay L includes a solenoid L and a normally open pair of contacts L-C. Relay 1A includes a solenoid 1A and a pair of normally open contacts 1A-C. Relay 2A includes a solenoid 2A and a pair of normally open contacts 2 A-C. Relay FW includes a solenoid FW and a pair of normally closed contacts FW-C. Relay REV includes a solenoid REV and two pairs of normally closed contacts REV-C1 and REV-C2 and two pairs of normally open contacts REV-C3 and REV-C4.

The positive terminal **50** of the source **21** is connected through the line disconnect switch LD, a thermal circuit breaker CB1, the normally open contacts L-C, and through resistors R1 and R2 connected in series to one terminal of the armature **51** of the shunt motor **22**. The other terminal **52** of the armature is connected to the negative terminal **53** of the source **50**. An ammeter **40** is provided in the latter circuit. Normally open contacts **1** A-C are connected in shunt with resistance R1 and normally open contacts **2** A-C are connected in shunt with resistance R2. The field circuit of the shunt motor **22** includes a field winding **54** and resistors R4, R5, R6, R7 connected in series. In the forward direction of rotation of the motor, one terminal **55** of the field winding is connected through the normally closed contacts REV-C1 to the contacts L-C remote from the positive terminal **50**. The other terminal **56** of the field winding is connected through the other pair of normally closed contacts REV-C2 to the remote end of field weakening resistor R4. The other end of the series connected string of the field weakening resistors R4, R5, R6 and R7, namely, the remote end of resistor R7 is connected to the negative terminal **53** of the source. Normally open contacts REV-C3 are connected between terminal **55** of the field winding and the aforementioned remote end of resistance R4 and the other normally open REV-C4 of contacts is connected between the terminal **56** and the aforementioned remote contact of contacts L-C. Switches T-FW1, T-FW2, T-FW3, T-FW4 are connected in shunt, respectively, with resistances R4, R5, R6 and R7.

Relay actuation circuits are connected between a point **60** between the junction of the thermal circuit breaker CB1 and the line contacts L-C and the negative terminal **53** of the source. Connected in series between the point **60** and the pole **61**a of the single pole, double throw switch T-Start are a two terminal key switch **39**, a two terminal seat switch **33**, and a two terminal brake switch **35**. One contact **61** of the single pole, double throw switch T-Start is connected to the anode **62** of the silicon controlled rectifier **63**, the cathode **64** of which is connected to one terminal of the solenoid L. The other terminal of the solenoid L is connected to the negative terminal **53**. The other contact **65** of the single pole, double throw switch is connected to the anode of unilaterally conducting device **66**, the cathode of which is connected to one terminal of starting network **67**. The other terminal of the starting network is connected to the cathode **64** of the control rectifier. The starting network consists of a capacitor **68** with series connected divider resistances **69** and **70** in parallel therewith. The junction point **71** between the resistances **69** and **70** is connected to the gate or control electrode **72** of the controlled rectifier. The time constant of the starting network is selected to be long enough such that sufficient voltage appears across resistance **70** to trigger the controlled rectifier **63** after the time interval of switching the pole **61**a from contact **65** to contact **61**. However, the time constant is selected not to be so long as would negate the safety function of the circuit as will be explained below. For a switch having a switching time of 50 milliseconds from one contact to the other, retention of adequate triggering voltage across resistance **70** for 100 milliseconds would be satisfactory and provide desired safety functions.

Each of the circuits **80**, **81** and **82** for controlling current flow through solenoids **1A**, solenoid **2A** and solenoid FW, respectively, are identical and each includes a positive and a negative terminal. The circuit for controlling the actuation of solenoid **1A** comprises a silicon controlled rectifier **85** having an anode **86** connected to the positive terminal **83** and a cathode **87** connected to the negative terminal **84**. Series resistance **88** and capacitance **89** are connected in the order named between the positive terminal **83** and the negative terminal **84**. The positive base **90** of a unijunction transistor **91** is connected through a load resistance **92** to the positive terminal **83** and the negative base **93** of the unijunction transistor is connected through the resistor **94** to the negative terminal **84**. The emitter or control electrode **95** of the unijunction transistor is connected to the junction of resistance **88** and capacitance **89**. In operation, upon the application of operating potential between the positive terminal **83** and negative terminal **84**, the capacitor **89** charges, as determined by the time constant of the resistance **88** and capacitance **89** until a voltage is reached which triggers the unijunction transistor **91** to pass current between the base electrodes thereof thereby establishing a triggering potential across the resistance **94** which triggers the silicon controlled rectifier **85** conductive. Accordingly, the circuit provides a conduction path after the elapse of a predetermined time from the application of potential between the positive and negative terminals thereof. The positive terminal **83** of the network is connected to one terminal of the switch T-1A the other terminal which is connected to the cathode **64** of silicon controlled rectifier **63**.

The negative terminal **84** of the circuit is connected to one of terminal of the switch T-2A, the other terminal which is connected to the positive terminal **95** of the circuit **81**. The negative terminal **96** of the circuit is connected to one terminal of the solenoid **2A**, the other terminal of which is connected to terminal **53**. Terminal **96** is also connected to the positive terminal **97** of the circuit **82**. The negative terminal **98** of circuit **82** is connected to one terminal of the solenoid FW, the negative terminal of which is connected to the negative terminal **53**.

The circuits **80**, **81** and **82** are sequentially firing circuits for sequentially energizing the solenoids of relay **1A**, **2A** and FW according to a predetermined time period. Accordingly, when switches T-1A and T-2A are closed, initially silicon controlled rectifier **85** is fired after a predetermined time interval determined by the time constant of the circuit **80**. After another predetermined time interval the silicon controlled rectifier of circuit **81** is fired and actuates solenoid **2A** and after a third predetermined time determined by the time constant of circuit **82** the silicon controlled rectifier thereof is fired and actuates solenoid FW.

The pole of switch T-Start is connected to one contact of switch T-REV, the other contact of which is connected to the positive end of solenoid REV. The negative end of solenoid REV is connected to the negative terminal **53** of the source. A series circuit of resistance **100** and capacitance **101** is connected in shunt with the solenoid REV to provide a time delay in the discharge of the solenoid.

In operation of the circuits described above, the line disconnect LD is put in place, the thermal circuit breaker CB1 being associated with the motor **22** is closed, the key switch **39** is closed, the operator in sitting on the seat of the tractor actuates the seat switch **33** and the brake lever is released to close brake switch **35**. The T-Start switch is placed in the start position with the pole thereof engaging contact **65** to charge the triggering or starting network **67** and then it is placed in the forward operate position **6** with the pole thereof engaging contact **61** to provide operating potential to the silicon controlled rectifier **63** thereby causing current to flow therethrough to energize the solenoid L. The closing of the contacts L-C provides voltage across the armature circuit of the motor **22** through resistances R1 and R2. The lever **25** is moved into position **7** causing contacts **1**AC to close after a short time delay determined by the gate triggering circuit of the controlled rectifier **85**. The closing of contacts **1**AC causes resistance R1 to be shorted out of circuit thereby increasing the speed and torque of the motor **22**. Upon moving the lever **25** to position **8** the switch T-2A is closed providing operating voltage across the circuit **80** and after a predetermined time

delay in the unijunction triggering circuit the silicon controlled rectifier of the circuit is energized thereby closing contacts 2AC and shorting resistance R2 and hence further increasing the speed and torque of the motor. After a predetermined interval of time of energization of the relay 2A, the relay FW is energized through the circuit **82** opening up the normally closed contacts FW-C connected across the series string of field resistances R4, R5, R6 and R7. It should be noted with the closing of line contacts L-C the field circuit of the motor **22** is completed through the normally closed contacts REV-C1 and REV-C2 of relay REV. As the lever **25** is moved into positions **9**, **10**, **11** and **12** the normally closed contacts of the switches T-FW1, T-FW2, T-FW3 and T-FW4 are, respectively opened thereby respectively inserting resistances R4, R5, R6 and R7 in series circuit with the field winding **54** reducing the current flow therethrough thereof and increasing the speed of the motor. To reverse the direction of rotation of the motor **22**, the lever **25** is brought back to position **4**, moved generally horizontally in the guide slot **26** and moved rearward in the portion **28** thereof. When the lever **25** is moved to position **5** and position **4**, the switches T-FW4, T-FW3, T-FW2, T-FW1, T-2A, T1A and T- Start are returned to their normal positions and line contactors L-C are opened. When the lever **25** is moved from position **4** to slot **29** to position **5** in slot portion **28** it traverses slot portion **27** and closes switch T-REV (See FIG. 4). Closing of switch T-REV energizes the relay REV which reverses the polarity of the terminals of the field winding **54**. When the control lever is moved into position **3**, the T-Start operate switch is moved from the start to the operate position and causes energization of the silicon controlled rectifier **63** as in the case of forward direction operation. Moving the control lever to position **2** closes the contacts of switch T-1A and similarly moving the control lever to position **1** closes the contacts of switch T-2A to sequentially short out resistances R1 and R2 in series with the armature circuit of the motor **22**. When the lever **25** is moved back to position **4** and position **5**, the switches T-2A, T-1A, and T-Start are returned to their normal positions and line contactors L-C are opened. When the lever **25** is moved to traverse slot portion **27** from slot portion **28** to slot portion **29** the switch T-REV is opened. The location of switch T-REV so as to be actuated and deactuated during the traverse of lever **25** in slot **28** is to assure positive operation of the field reversing contacts and operation of such contacts only after the line contacts L-C have been opened and energy of the motor system has been allowed to decay sufficiently. Separation of the forward speed and reverse speed positions by the generally horizontal slot portion **27** also provides an enforced time delay in going from one speed direction to the opposite speed direction. A delay is provided in the release of normally opened contacts REV-C3 and REV-C4 by capacitor **101** and resistance **100** connected in series across the solenoid of relay REV. Such delay maintains the field winding **54** in circuit until the energy of the motor system has been dissipated and avoids undesired arcing of the contacts. The organization of the switch elements of assembly **23** including the lever **25** to effect the switching action described in the operation of the circuit for operating the armature motor at various forward speeds and various reverse speeds will be explained below in connection with FIGS. **4**, **5** and **6**.

A particular feature of the circuit described is that should the operator of the tractor apply the brake during any one of the forward or reverse speed settings of the lever **25**, the current flow through the silicon controlled rectifier **63** is interrupted as the brake switch **35** is opened. Now should the operator release the brake so as to close the switch **35** the tractor will not start as only cathode to anode voltage is being applied without appropriate triggering of voltage being applied to the gate of the controlled rectifier. The triggering voltage of network **67** has decayed below a triggering level shortly after pole **61a** engages contact **61** as explained above. Accordingly, to start the tractor it is necessary to return the control lever **25** to one of the neutral positions **4** and **5** to apply voltage to the input circuit of the starting network **67** to establish a triggering voltage to trigger the control rectifier. The seat switch **33** is also located in series with the current flow paths from a source **21** of unidirectional voltage to the control rectifier **63** so that should the operator rise from the seat the circuit is broken and sitting back down again does not reestablish current to the armature of the motor provided the operator does not sit back down practically instantaneously while sufficient triggering voltage is available from the triggering network making the time constant of the triggering network short as explained above as a practical matter eliminates the latter possibility. As in the case of the brake switch operation it is necessary to return the lever **25** to a neutral position and initiate the start-operate sequence as explained above.

Another feature of the present invention is the sequentially operated relay circuits **80**, **81** and **82** for sequentially applying energization to the speed control relays **1A**, **2A** and FW of the motor to increase the speed thereof. Should the operator move lever **25** rapidly through positions **6**, **7** and **8**, the tractor would not accelerate in accordance with such movement. Its acceleration from one position to the next would be determined by the time constants of the unijunction triggering circuits thereof. Of course, the time constants of the circuits **80**, **81** and **82** can be made different and are designed so as to avoid too rapid a switching from one set of speed versus torque characteristics to the next set of speed vs. torque characteristics in order to provide smooth acceleration. A capacitor **105** is connected in shunt with the field winding **54** to suppress transients produced in the field circuit which could damage the solid state active devices of the circuit such as the controlled rectifiers and unijunction transistors. A damping circuit consisting of a resistance **106** and a reversely poled diode **107** is connected in shunt with each of the relays L-1A, 2A, FW and REV to permit discharge of the inductance of the solenoids upon breaking of the current flow through the solenoids.

A power takeoff device **110**, such as the motor of an electric mower, is connected in series with a thermal circuit breaker CB2. The terminals of such series combination are then connected to a pair of outlet terminals on socket **42**. The power takeoff PTO has a solenoid PTO and a set of normally open contacts PTO-C1 and a set normally closed contacts PTO-C2. The contacts PTO-C1 and PTO-C2 are connected in series across the source **21** of operating voltage. One outlet terminal **111** is connected to one terminal of the normally closed contact PTO-C2 and the other outlet terminal **112** is connected to the other normally closed contact PTO-C2. A power takeoff switch PTO-S is provided. The switch PTO-S is a single pole, double throw switch having a pole **115** and a pair of terminals **116** and **117**. A circuit similar to the circuit used for actuation of the solenoid relay L is used for the actuation of the solenoid PTO of the relay PTO. The circuit comprises a silicon controlled rectifier **120** having an anode **121** connected to terminal **117** of switch PTO-S, the cathode **122** of which is connected to one terminal of the solenoid PTO. The other terminal of the solenoid PTO is connected to the negative terminal **53** of the source. A starting circuit **123** for the control rectifier comprises a capacitance **124** and a pair of resistances **125** and **126** connected in series across the capacitor **124**. The junction point of resistance **125** and **126** is connected to the gating or control electrode **127** of the silicon controlled rectifier **120**. One terminal of the capacitor **124** is connected to the cathode of unilaterally conducting device **128**, the anode of which is connected to terminal **116** of PTO-S switch. The other terminal of the capacitor **124** is connected to the cathode of the silicon controlled rectifier. The operation of the circuit described is identical to the operation of the control circuit for actuating of the relay L. It is initially necessary to switch the pole **115** of the PTO-S switch to the terminal **116** to establish a starting potential on the gating electrode **127** of the controlled rectifier and then switch the pole **115** to contact **117** to establish operating potential to the silicon controlled rectifier **20**, thereby initiating conduction therein and

conduction in the PTO relay. The normally open contacts PTO-C1 are closed and the normally closed contacts PTO-C2 are opened, thereby applying power to the motor **110**. Should power to the silicon controlled rectifier **120** be interrupted by the operator arising from the seat, the PTO relay circuit is opened up and hence the normally opened contacts PTO-C1 thereof becomes normally open and the normally closed contacts PTO-C2 become closed providing a dynamic braking circuit for the motor **110** thereof. Closing the circuit through the silicon controlled rectifier **120** by closing the seat switch does not establish conduction in the controlled rectifier and does not establish operation of the power takeoff device. It is necessary to switch the pole **115** of the PTO-S switch to terminal **116** before conduction can be established to the power takeoff motor **110**.

Referring now to FIG. **4**, there is shown an exploded view of the speed control assembly **23** described in FIGS. **1**, **2** and **3**. The speed control assembly **23** has a frame support **130** member including a top generally planar portion **131** and a side generally planar portion **132**. The face cam wheel **133** of plastic material is rotatably supported by brackets **134** and **135**, fastened to the side portion **132** to rotate about an axis perpendicular to the side portion **132**. On an outwardly extending face **136** of the wheel **133** are included a plurality of narrow elevated strips extending for various circumferential lengths and located in various radial positions thereon.

Reference is now made particularly to FIG. **5** which shows a plan view of the outward extending face **136** of wheel **133**. The center line of cams **140** and **141** are located on the same radius, that is, an outermost radius. Cams **142** and **143** are located at the same radius smaller than the radius of cams **140** and **141**. Similarly, cams **144** and **145** are located at the same radius smaller than the radius of cams **142** and **143**. Cams **146** and **147** are located on the same radius closest to the center of the rotational axis of the wheel **133**. The radii and circumferential extent of the cams **140–147** are arranged so as to engage particular ones and over a particular angle of displacement of the wheel **133** of the buttons of switches T-2A, T-FW4, T-FW3, T-FW2, T-FW1, T-1A, and T-Start. The cams function to actuate the buttons of the aforementioned switches which are mounted in a line along a diameter of the face of the wheel **133**. The switches are mounted to the bracket or cross member **134** which in turn is secured to the side portion **132**. The particular location of the switches is shown in FIG. **4** and also shown in FIG. **6**. Starting from the lower left hand corner of FIG. **4** the switches are, respectively, the following T-Start switch, T-1A, T-FW1, T-FW2, T-FW3, T-FW4, and T-2A.

FIG. **6** shows a schematic of the aforementioned switches and also shows the order of their arrangement. The cam wheel **133** may be oriented in any one of twelve positions with respect to the axis of the switch assembly and are so designated numerically on FIG. **5**. Each of the positions are equally spaced from adjacent positions and are locked in place by a detent in the periphery of the wheel **133** which engages a spring loaded ball **150** secured to side portion **132**. The face cam wheel **133** is manually positioned by means of a leverage assembly **151** comprising a sector gear **152**, a shaft **153** and lever **25**. The sector gear **152** engages a spur element **154** attached to the face wheel on the side opposite to which the cams are located and is pivotally secured to one end of the shaft **153**. The shaft **153** is pivotally mounted between side portion **132** and bracket **135**. The axis of rotation of the shaft **153** is parallel to the axis of rotation of the cam wheel **133**. To the end of the shaft opposite to which the sector gear **152** is secured, is attached the lever **25**. The lever **25** is pivotally mounted on shaft **153** by means of a pin **155** extending along a diameter of the shaft **153** so as to permit forward and reverse movement of the lever to produce a rotation of the shaft **153** and hence a rotation of the wheel **133** and a sideways movement of the lever **25** about the axis of the pin which does not produce any axial rotation of the wheel **133**. The lever **25** extends through the slot **26** in the top assembly portion **130** of the frame. The slot **26** has a forward extending elongated portion **29** and a rearward extending portion **26** displaced sideways therefrom. The upper forward portion of slot **26** and a rear portion of slot **29** are connected by a generally horizontal or sideways extending portion **27** inclined slightly in the forward direction. The numbers adjacent the marker lines touching on the slot **26** indicate positions of the lever **25** corresponding to positions of diametrical lines so numbered on the face wheel of FIG. **5** in registry with the axis of the switch assembly. In the drawing of FIG. **4** the lever position is shown in position **4**. On FIG. **5** the line **4** intersects no cams so that no switches are actuated. When lever **25** is in position **1**, cams **141**, **143** and **142** actuate switches T-Start, T-1A and T-2A. Similarly, for the other positions various switches are actuated. Such actuation is indicated on the following diagram which shows the switches of the assembly **23** as well as FW relay and T-REV in columns and the lever positions **1** through **12** in rows. An X at the intersection of a column and a row indicates actuation of the component for the switch position.

Lever position	Switch			Switch T-REV field reverse	Field weaken	Switch			
	T-start	T-1A	T-2A			T-FW1	T-FW2	T-FW3	T-FW4
1	X	X	X	X					
2	X	X		X					
3	X			X					
4				X					
5				X					
6	X								
7	X	X							
8	X	X	X		X				
9	X	X	X		X	X	X	X	X
10	X	X	X		X		X	X	X
11	X	X	X		X			X	X
12	X	X	X		X				X

Additionally shown in the diagram are the action switch T-REV for positions **1**, **2** and **3** and for neutral positions located in slot portion **28**. Also shown is the actuation of the field weakening relay FW for the indicated positions.

While the invention has been described in a specific embodiment, it will be appreciated that many modifications may be made by those skilled in the art and we intend by the appended claims to cover all such modifications and changes as fall within the true spirit and scope of the invention.

What we claim as new and desire to secure by Letters Patent of the United States is:

1. In an electrical network wherein a source of unidirectional voltage is coupled to a load circuit, such as a DC motor, and wherein actuation of current interrupting means, such as contactors, from a first to a second state interrupts application of unidirectional voltage from said source to said load circuit, a reset control arrangement requiring manual resetting to reapply the unidirectional voltage from said source to said load circuit, comprising:

a. said source of unidirectional voltage having a positive terminal and a negative terminal;

b. a unidirectional conduction control device having a cathode, an anode, and a control electrode;

c. a starting network comprising an input adapted to be coupled to said source of unidirectional voltage, an output, and means for producing in said output a unidirectional

control voltage decaying rapidly subsequent to removal of unidirectional voltage from the input circuit of said network;

d. means coupling said output to the control electrode to cathode circuit of said control device to render said device conductive when operating voltage is applied to said anode to cathode circuit thereof and to preclude the initiation of conduction in said device subsequent to decay of said control voltage;

e. switching means for alternately connecting said anode to cathode circuit and said input of said starting network in circuit between said terminals of said source, whereby when said network is switched out of circuit and said anode to cathode circuit is switched into circuit across said terminals conduction occurs in said anode to cathode circuit and the control voltage in said output circuit of said network decays to a value insufficient to initiate conduction in said control device;

f. said load circuit,

g. means responsive to conduction in said anode to cathode circuit to actuate and maintain conduction in said load circuit as long as conduction exists in said anode to cathode circuit, and

h. means for interrupting current flow in said anode to cathode circuit, whereby said load circuit is opened and closing the circuit between said terminals and said anode to cathode circuit path does not reestablish current flow through said control device.

2. The combination of claim **1** in which said switching means is a single pole double throw switch having a pole and a pair of contacts, one of said contacts connected to one of the main current conduction electrodes of said control device, the other of said contacts connected to one of the terminals of said starting network, the other of said main current conduction electrodes of said control device and the other of said terminals of said network connected in circuit to one of said terminals of said source and said pole connected in circuit to the other of said terminals of said source.

3. The combination of claim **1** in which said load circuit includes an electric motor.

4. The combination of claim **1** in which said unidirectional conduction control device is a silicon controlled rectifier having an anode, a cathode and a control electrode.

5. The combination of claim **1** in which said starting network includes resistive and capacitive elements.

6. In an electrically driven tractor the reset control arrangement of claim **1** wherein said load circuit means comprises the drive motor circuit of said tractor.

7. The combination of claim **6** in which said current flow interrupting means includes a switch responsive to the actuation of the tractor braking mechanism to open said switch.

8. The combination of claim **6** in which said current flow interrupting means includes a switch responsive to the presence of an operator on the operator seat thereof to close said switch and responsive to the absence of an operator from the operator seat thereof to open said switch.

* * * * *