United States Patent

Bensussan

[15] **3,649,868**

[45] **Mar. 14, 1972**

[54] PULSE ELECTRON GUN

[72] Inventor: **Andre Bensussan,** Paris, France

[73] Assignee: **Thomson-CSF**

[22] Filed: **Mar. 26, 1970**

[21] Appl. No.: **22,892**

[30] **Foreign Application Priority Data**

Mar. 31, 1969 France 69/09674

[52] **U.S. Cl.** **315/39,** 313/104, 313/95, 315/5.11, 315/5.13, 250/207

[51] **Int. Cl.** **H01j 1/46,** H01j 11/80, H01j 19/02

[58] **Field of Search** .....313/103, 104, 105; 315/5.41, 315/5.42, 39; 333/99 MP; 250/207, 208

[56] **References Cited**

UNITED STATES PATENTS

3,349,273	10/1967	Gregg	313/105 X
3,201,640	8/1967	Farnsworth	333/98 MU
3,435,233	3/1969	Farnsworth	313/105 X
2,210,034	8/1940	Keyston	333/98 MU
2,925,522	2/1960	Kelliher	315/5.42
3,215,844	11/1965	Wittwer, Jr.	313/103 X
3,233,140	2/1966	Holshouser	313/103 X
3,388,282	6/1968	Hankin et al	313/103 X

FOREIGN PATENTS OR APPLICATIONS

1,230,924	12/1966	Germany	313/105

Primary Examiner—Herman Karl Saalbach
Assistant Examiner—Saxfield Chatmon, Jr.
Attorney—Kurt Kelman

[57] **ABSTRACT**

An electron gun comprises a photoemissive source, which is excited by a source of light such as a pulsed laser. This electron emission is amplified by a secondary emission multiplication system comprising a plurality of AC or DC biased dynodes. In the former case the gun envelope forms a resonator cavity.

1 Claims, 2 Drawing Figures

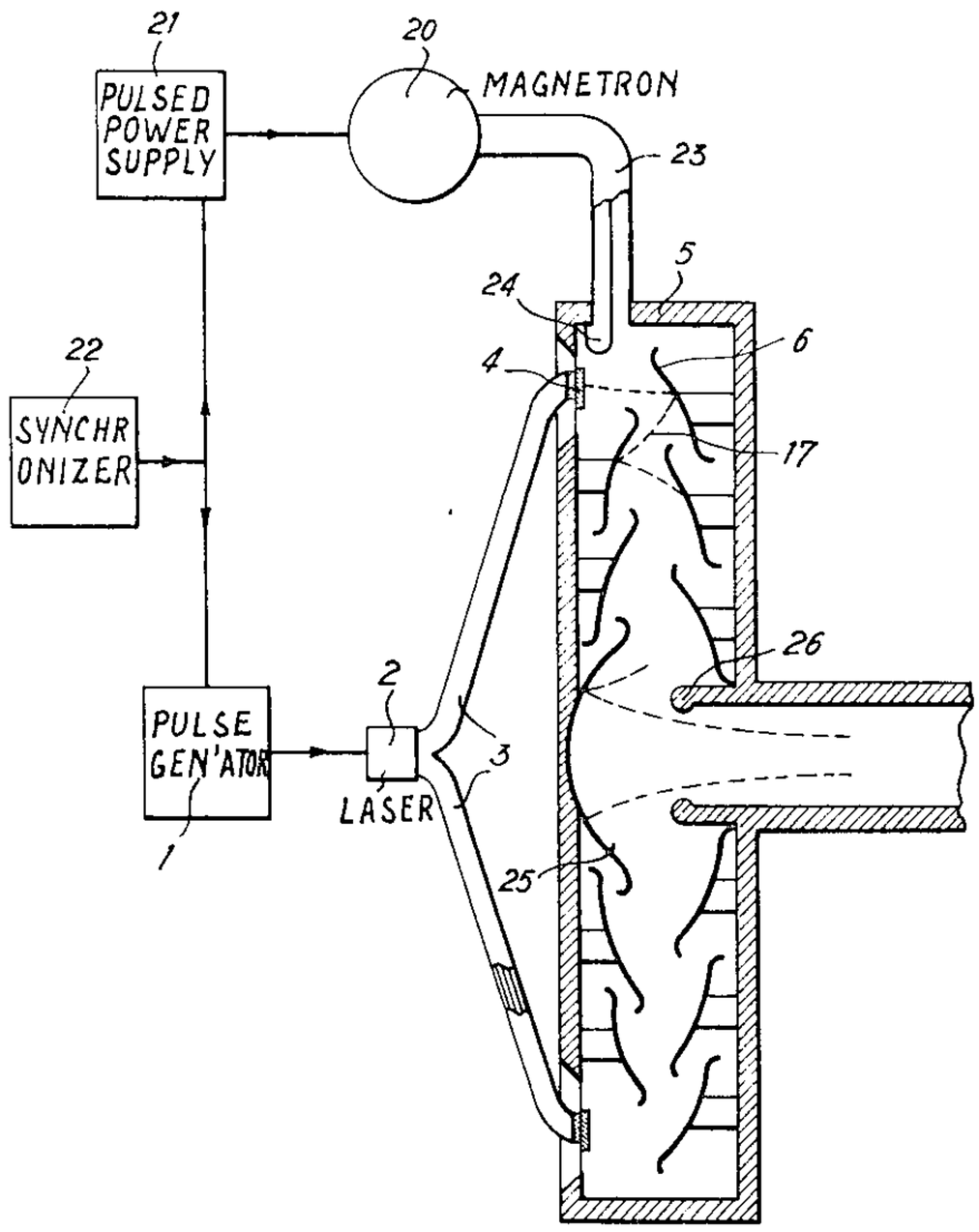

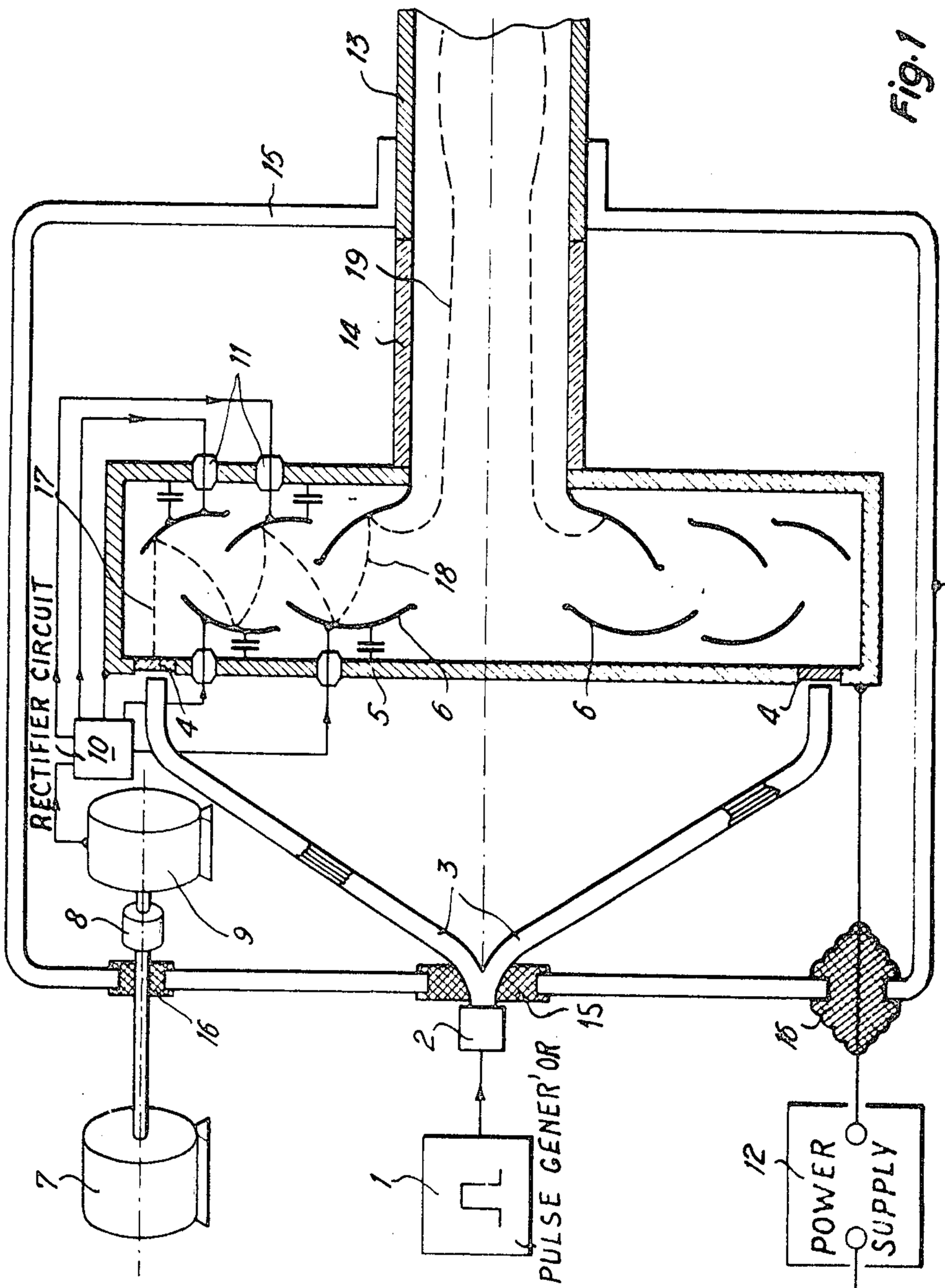
13
15
19
14
11
17
18
RECTIFIER CIRCUIT
10
4
5
6
6
4
8
9
3
16
2
15
15
PULSE GENER'OR
1
12
POWER SUPPLY
7

Fig. 1

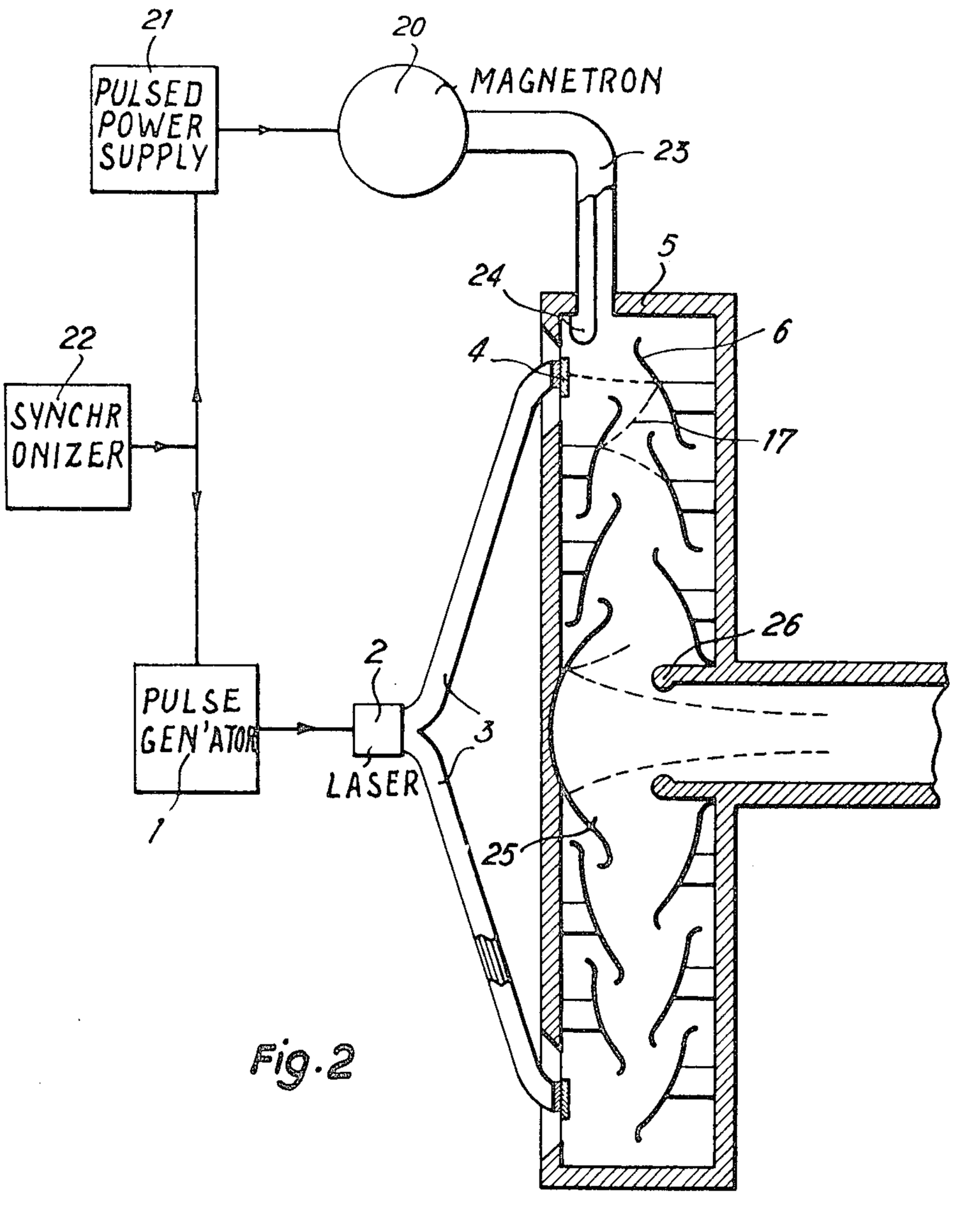
21
PULSED POWER SUPPLY
20
MAGNETRON
23
5
24
6
4
17
22
SYNCHR ONIZER
26
2
PULSE GEN'ATOR
3
LASER
1
25

Fig. 2

PULSE ELECTRON GUN

The present invention relates to a novel electron gun operating on short pulses, more particularly intended for electron accelerator devices of the kind employed in nuclear research applications.

Such accelerators have in essence a triode-type structure whose electron-emissive cathode and whose control grid are, in the conventional way, placed at a negative potential in relation to the anode which is in this case the accelerator structure itself. For reasons of convenience, this accelerator structure, the dimensions of which can attain several hundred meters in typical cases, is maintained at earth potential and the consequence of this is that the cathode-grid arrangement is placed at a negative potential in relation to earth, which potential is equivalent in absolute value to the anode voltage, i.e., is usually very high indeed.

This arrangement is supplied by electrical power sources, both in continuous operation and in pulse operation, which are consequently likewise placed at the same very high potential in relation to earth.

Major difficulties arise out of this situation:

the design and construction of said sources is complicated because it is necessary to insulate them electrically from their environment;

in the operation of this equipment certain elements, which are at a very high potential have to be controlled and switched;

to obtain the desired results, conventional-type electron guns comprise, for the purpose of applying the pulse modulation, one or more electrodes whose relative capacitances and inductances set a bottom limit on the pulse duration.

It is more particularly an object of the invention to avoid these difficulties.

According to the invention there is provided an electron gun for electron discharge devices comprising: an evacuated enclosure including a photoemissive target capable of generating an electron current, means for amplifying said electron current, and means for picking up said electron current for subsequent use; a light source; and optical means for transmitting said light to said target for producing said electron current.

For a better understanding of the invention and to show how the same may be carried into effect, reference will be made to the drawing accompanying the ensueing description and in which:

FIG. **1** illustrates the assembly of a short-pulse electron gun circuit for direct acceleration voltage; and

FIG. **2** illustrates a short-pulse electron gun circuit for alternating acceleration voltage.

The same reference numbers designate the same elements in all the figures.

The assembly illustrated in FIG. **1** comprises a short-pulse generator **1** supplying a laser-type light source **2**. The latter is connected through a light transmission device **3** which can be for example, optical fibers or an optical system employing mirror and/or prisms and lenses, photoemissive targets as **4** which produce electrons and are fixed to the wall of a sealed metal enclosure **5**. The electrons thus emitted impinge upon a first of a series of annular electrodes **6** referred to in the art as "-dynodes," and positioned as shown in FIG. **1**. Their surface is constituted by a material having a high secondary electron emission coefficient and they are biased by a voltage source comprising an electric motor **7** which, through the medium of an insulating sleeve **8**, drives an alternator **9**, the alternating voltage from which is converted to a direct voltage by a rectifier **10** and as then applied to the electrodes **6** through an insulating lead throughs **11**. A high-voltage generator **12** brings the electron gun assembly **5** to a negative voltage in relation to the body of the accelerator **13**. The latter is rendered vacuum-tight and is connected to the gun assembly through a sealed insulating sleeve **14**. A casing **15** surrounds the assembly of elements which are at high voltage. It can be filled, if required with an insulating gas of high breakdown voltage such as, for example, sulfur hexafluoride. Insulating sealing sleeves, such as sleeves **16**, prevent any gas leakage where connections through the wall of container **15** exist.

During operation, the pulse generator **1** supplies the laser-type light source **2**. The light produced by the latter is channelled through light conducting channels **3** to the transparent photoemissive targets **4**. The electrons emitted are attracted by the first annular electrode **6**, which is placed at a positive potential in relation to said targets, by the rectifier **10**, the electrons being incident upon said target in accordance with a trajectory of the kind marked **17** and producing consequent secondary electrons in substantially larger numbers than the numbers of incident electrons. Due to the material of which the surface of said electrode is made, the phenomenon described takes place in cumulative way from electrode to electrode, each of the latter being placed at a higher potential than the particular preceding one, considered in the order of the respective paths **18** in which the electrons are developed. In the last stage of electron multiplication, the shape of the electrode **6** is such that it creates, in combination with the electric field prevailing between the enclosure **5** and the tubular body of the accelerator **13**, electric forces resulting in electron trajectories such as **19** for purposes of subsequent utilization.

By way of example, one may use as light source **1**, a solid-state laser of the gallium arsenide kind for example, producing a power of 5 w. at a wavelength of 8,400 A. with pulses of 1 ns. duration, the photocathode being a photoemissive surface of S1 type with a sensitivity of 2 ma./w.; by way of secondary emission multiplier electrodes, five nickel-beryllium surfaces, each having a bias of +200 v. in relation to the preceding one, can be used, giving an overall current gain of 10^4 for a secondary emission coefficient in the order of 7; the peak current developed under these circumstances is around 20 a. for 1 w. of light power.

FIG. **2** illustrates a variant embodiment of the invention.

This embodiment comprises a short-pulse generator **1**, supplying a laser-type light source **2**, light conductors **3** of the kind already described, photoemissive targets producing electrons and fixed to the wall of a sealed metallic enclosure **5**, a series of annular electrodes **6** whose surfaces are made of a material having a high secondary electron emission coefficient, the appropriate biasing of these electrodes being provided by an UHF electromagnetic power source **20**, for example a magnetron, and this magnetron being supplied by the power pulse generator **21**, the pulses of which are synchronized with those of the generator **1** by a pilot device **22**.

In operation, the radio frequency power produced by the source **20** is introduced, through the line **23** and the coupling probe **24**, into the metal cavity, the dimensions of which latter have been calculated so that it goes into resonance in the mode E 010. The magnetic lines of force there are circles centered on the axis of revolution of the cavity and have their planes parallel with the mutually opposite flat faces, while the electric lines of force then are parallel to the axis of revolution of the cavity.

The electrons created by the photoemissive targets **4** are subjected to this alternating electric field and experience an accelerating force; if the instant at which the electrons are generated by the targets **4** coincides with that at which the electric field is in an accelerating state, and if the intervals between the annular electrodes are so chosen that the time taken by the electrons to pass from one dynode to the next is equal to half the periodicity of the high-frequency oscillation, then the electrons will describe trajectories **17**. As in the case of electron gun shown in FIG. **1**, there will be an increase in the current initially generated by the targets.

This mechanism of generation of a beam is sometimes present as an undesired phenomenon, in the resonant cavities of certain electron tubes and is then known as "multipactor effect." However, in the present invention, this very effect is put to use.

On the other hand, it is possible to do without a DC high-voltage source **12**: the alternating electric field prevailing in the resonant cavity can itself perform the function of guiding the electrons towards the anode. It has a maximum value on the axis of revolution and can reach values comparable with that of the DC voltage employed in the electron gun shown in FIG. **1**. For this purpose, it is advantageous to reduce the distance between the last electrode **25** and the edges of the opening **26**, and to give to the latter a form such that the beam emitted for this electrode is concentrated and focused so that it is fed into the acceleration space in an optimum manner in terms of shape and direction.

By way of example, all the physical quantities being the same as those quoted in respect of FIG. **1**, the frequency could be in order of 1,000 mHz. with a peak power of 75 kw., in which case the resonant cavity would have a diameter of 25 cm. and a total thickness of 5 cm.; the axial distance between the elements **25** and **26**, is then in the order of 2.5 cm.; under these circumstances, the maximum acceleration voltage at the extraction output of the gun, would be in the order of 75 kv.

Of course the invention is not limited to the embodiments described and shown, which were given only by way of examples. In particular, the invention is not limited to electron accelerators and can be applied to any electronic device in which a short-pulse electron beam is employed.

What is claimed is:

1. An electron gun for an electron discharge device, which comprises:

1. an evacuated, cylindrical cavity resonator having an axis of symmetry;
2. a plurality of photoemissive electron sources disposed about the periphery of one end symmetry, said cylindrical cavity resonator, said electron sources being capable of generating a primary electron beam within said cavity;
3. a plurality of annular electrodes within said resonator, coaxial with said axis of symmetry, successive annular electrodes having an increased radius, the annular electrode closest to the periphery of said resonator having the greatest radius, each of said electrodes being capable of emitting secondary electrons;
4. means for supplying a source of radio frequency signals to said cavity resonator, said signals having a frequency corresponding to the resonant frequency of said cavity, whereby a standing wave is established in said cavity, said electrodes being positioned, with respect to said standing wave, at points of different voltage magnitude in said cavity;
5. a source of light;
6. optical means for transmitting light from said source to said plurality of photoemissive electron sources to produce said primary electron beam; and
7. means, located proximate said axis of symmetry, for extracting said primary beam and the beam comprised of the secondary electrons from said plurality of annular electrodes, for subsequent utilization.

* * * * *