United States Patent

Holmes

[15] **3,649,865**

[45] **Mar. 14, 1972**

[54] WIRE MESH MEMBER HAVING INTERSECTING STRANDS BONDED TOGETHER AND METHOD OF MANUFACTURE

[72] Inventor: **Robert E. Holmes**, Portland, Oreg.

[73] Assignee: **Tektronix, Inc.**, Tektronix Industrial Park, Beaverton, Oreg.

[22] Filed: **Dec. 29, 1969**

[21] Appl. No.: **888,328**

[52] **U.S. Cl.**.....**313/350**, 204/16, 204/24, 313/293

[51] **Int. Cl.**.....**H01j 1/46**, H01j 1/52, H01j 17/04

[58] **Field of Search**.....313/293, 350; 204/16, 24

[56] **References Cited**

UNITED STATES PATENTS

Re22,009 1/1942 Farnsworth.....313/350 X

1,892,819 1/1933 Gessel.....313/350

Primary Examiner—David Schonberg
Assistant Examiner—Paul A. Sacher
Attorney—Buckhorn, Blore, Klarquist and Sparkman

[57] **ABSTRACT**

A woven wire mesh member and method of manufacture are described in which the intersecting wire strands are bonded together and then etched for increasing the transmission characteristics of such mesh. The bonding of the intersecting portions of the wire strands is accomplished by electroplating and insures a strong mesh structure whose wires remain in a fixed position after such etching. The bonded mesh member is etched by electropolishing to uniformly reduce the diameter of the wires and removes the plating layer from the wires except in the regions of such bonds. This electropolishing increases the electron transmission characteristics of the wire mesh, in one example to a transmission of 85 to 90 percent. Such a mesh member may be used as a grid, a collector or a storage target electrode in an electron beam tube.

6 Claims, 3 Drawing Figures

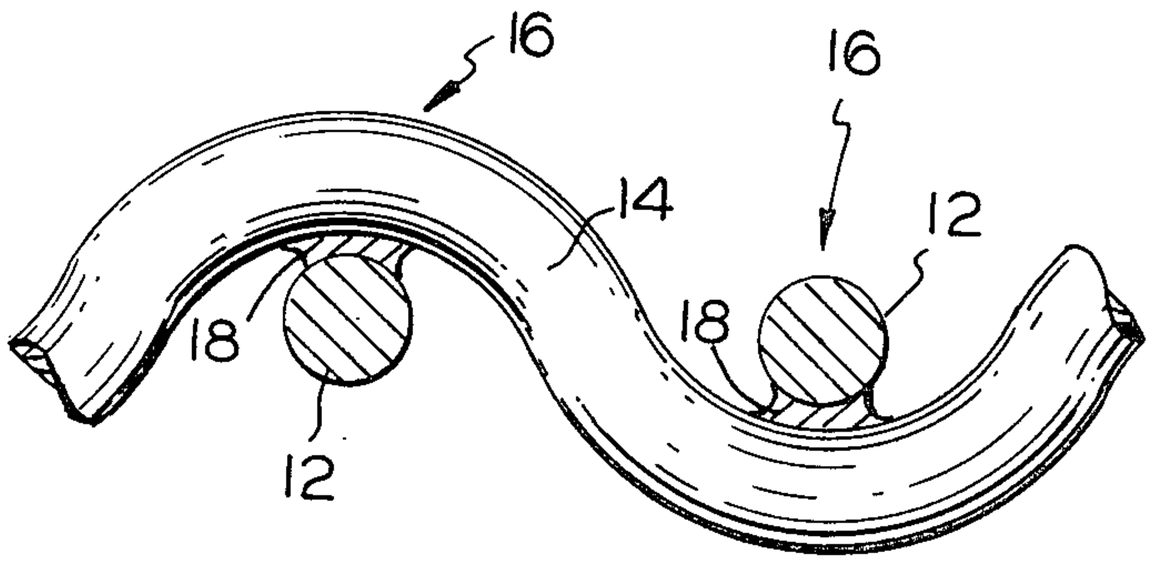

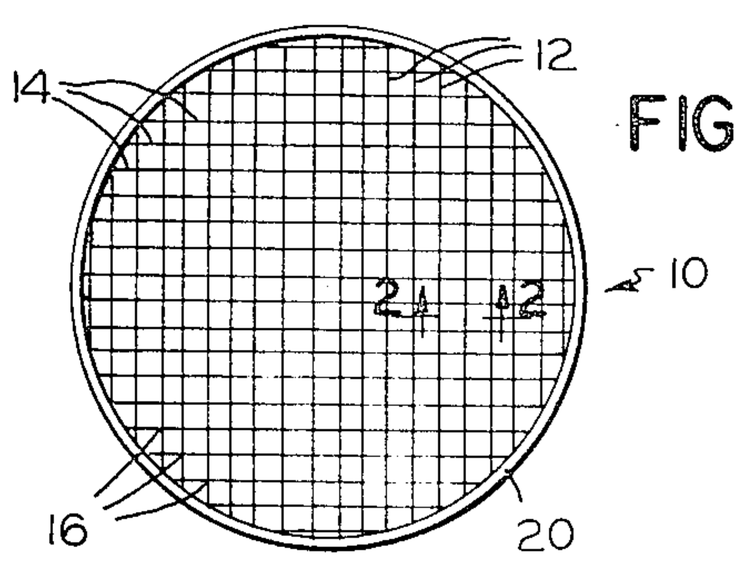

FIG. 1

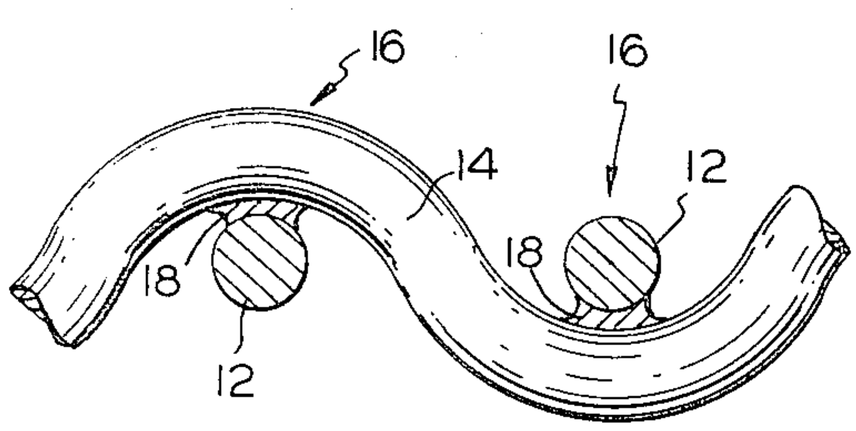

FIG. 2

FIG. 3

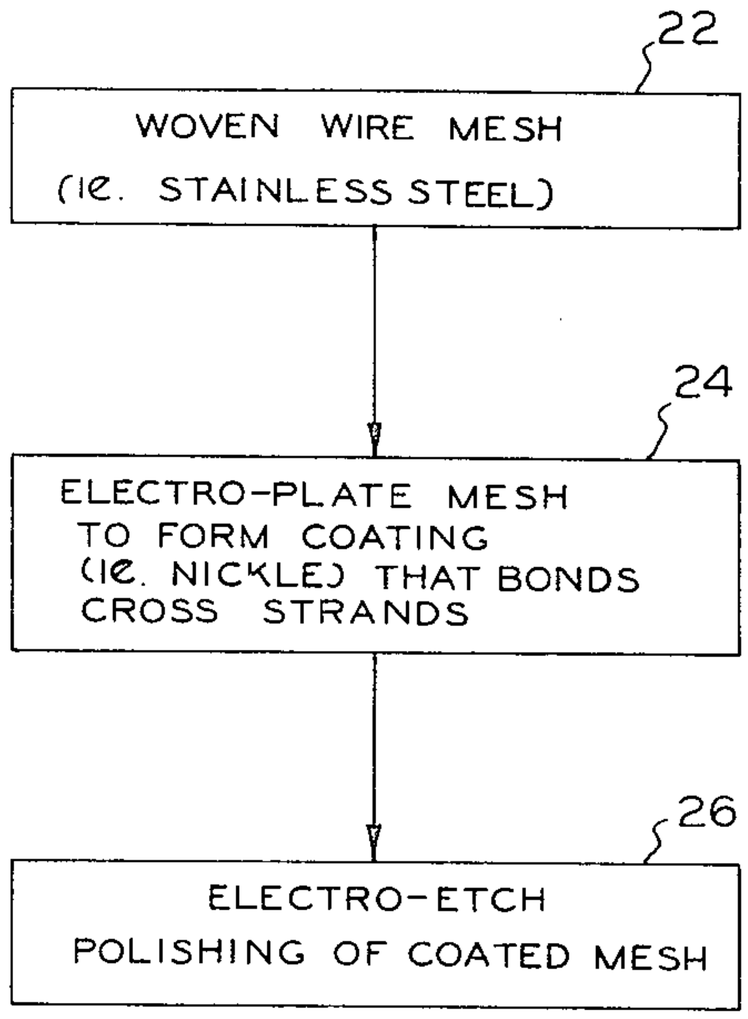

ROBERT E. HOLMES
INVENTOR

BY

BUCKHORN, BLORE, KLARQUIST & SPARKMAN
ATTORNEYS

WIRE MESH MEMBER HAVING INTERSECTING STRANDS BONDED TOGETHER AND METHOD OF MANUFACTURE

BACKGROUND OF THE INVENTION

The subject matter of the present invention relates generally to wire mesh members of high transmission characteristics and methods of manufacture thereof, and in particular, to such meshes having their intersecting wire strands bonded together at the intersections, such as by electroplating, and subsequently etched, such as by electropolishing, to uniformly reduce the diameter of the wires and remove the plating except in the regions of the bonds. The wire mesh members of the present invention are especially useful as electrodes in electron tubes because of their high electron transmission characteristics as well as their strength and dimensional stability due to such bonding. Specifically, such mesh electrodes can be employed as control grids of electron guns, collector meshes or storage target meshes for storage tubes, as well as the high-frequency interference shields.

It has previously been proposed to electroplate wire mesh members for various reasons. U.S. Pat. No. 1,934,643 of H.R. Rafton, issued Nov. 7, 1933, shows a straining filter made by electroplating a wire mesh sufficiently to cause the intersecting strands of the mesh to be bonded together and thereby providing a fine mesh filter. However, such meshes are entirely unsuitable for many uses, such as electrodes in electron tubes, because of the great reduction in electron transmission caused by such electroplating. U.S. Pat. No. 2,978,389 of A.A. Turnbull shows a wire mesh electrode which is electroplated to place the mesh in tension but apparently the plating is not of sufficient thickness to cause such bonding. In any case, it has never previously been proposed to produce a bonded, high transmission wire mesh like that of the present invention by bonding the intersecting wires, such as by electroplating, before etching to reduce the diameter of the wires, such as by electropolishing, so that the plating is removed except in the regions of the bonds. This bonding overcomes the problems of lack of strength and looseness of the wire strands resulting in a nonuniform mesh, which are caused when an unbonded wire mesh is etched.

It is therefore one object of the present invention to provide a high transmission, woven wire mesh member and method of manufacture in which the intersecting metal wire strands of the mesh are bonded together at such intersections prior to removal of material from the wire for increased transmission in order to provide such mesh member with greater strength and with strands of fixed relative positions.

Another object of the invention is to provide such mesh member and method of manufacture in which the bonding is achieved by electroplating the mesh, and the bonded mesh is etched to reduce the diameter of the wires and remove the plating except in the region of the bonds.

A further object of the present invention is to provide such a mesh member and method of manufacture in which the etching is accomplished by electropolishing to more uniformly remove material from the mesh strands and provide the desired wire diameter with a high degree of accuracy.

An additional object of the invention is to provide an improved electron transmission electrode for an electron tube employing the mesh member of the present invention.

BRIEF DESCRIPTION OF THE DRAWINGS

Other objects and advantages of the present invention will be apparent from the following detailed description of a preferred embodiment thereof and from the attached drawings of which:

FIG. **1** is an elevation view of the wire mesh member made in accordance with the present invention;

FIG. **2** is a horizontal section view taken along the line **2—2** of FIG. **1** showing on an enlarged scale the bonds at the intersections of the mesh strands; and

FIG. **3** is a block diagram illustrating one embodiment of the method of manufacture of the present invention which can be employed to form the mesh member of FIGS. **1** and **2**.

DESCRIPTION OF THE PREFERRED EMBODIMENT

As shown in FIG. **1**, a mesh member **10** made in accordance with the present invention includes a plurality of first wire strands **12** laterally spaced from each other and extending substantially parallel in a first direction, and a plurality of second wire strands **14** laterally spaced from each other and extending substantially parallel in a second direction. In the embodiment shown, the strands **12** and **14** are substantially perpendicular so that the second direction is displaced approximately 90° from such first direction. The first and second strands are interwoven so that they intersect each other forming a plurality of intersections **16** where the first strands cross the second strands.

A plurality of bonds **18** are formed at each of the intersections **16** out of a bonding material other than the material of the wires which is provided between the first strands **12** and the second strands **14**. For example, in one embodiment, the wire strands **12** and **14** may be made of stainless steel while the bonds **18** are made of nickel. The wire mesh may be attached to a mounting ring **20** of stainless steel, nickel or other suitable metal, in a conventional manner, such as by welding. After etching to increase transparency of the mesh, the bonding material **18** is confined solely to the region of the bonds at the intersections **16** and does not coat other portions of the wire strands **12**. As a result, the mesh member **10** is an extremely strong, stable mesh member of high transparency to electrons, light, gas, liquid, etc.

The mesh member of FIG. **1** may be employed as the control grid of an electron gun employed in a conventional cathode-ray tube, and as a collector electrode or as a mesh-type storage target electrode in a charge image storage tube. Other uses for the mesh member include an electrostatic shield against the high-frequency interference, for example, covering the air cooling opening for the fan at the rear of a cathode-ray oscilloscope.

As shown in the simplified flow diagram of FIG. **3**, one embodiment of the method of manufacture of the present invention includes the three steps illustrated by boxes **22**, **24** and **26**, which respectively relate to first, providing a woven wire mesh, second, electroplating the mesh sufficiently to form a coating that joins the cross strands of the mesh together with chemical bonds at their intersections, and third, electroetch polishing of the bonded mesh to reduce the diameter of the wires and remove the plating from such wires except in the region of the bonds. The term "electropolishing" as used herein refers to etching by electrolysis. In one example, a stainless steel wire mesh was provided in step **22** having wire strands of 0,001 inch diameter which were woven together to provide a mesh of 100 lines per inch. In accordance with step **24**, this woven wire mesh member was then placed in a nickel electroplating solution of 20 grams per liter of nickel sulfate, 45 grams per liter of nickel chloride, and 30 grams per liter of boric acid, at a pH factor of 2.3 to 4.5 and a temperature of 43° centigrade. Electroplating is continued at a current density of 0.02 to 0.07 amperes per square centimeter for 30 to 60 minutes, until a coating of about 0.0002 inch of nickel is formed on the wire strands of the mesh, which is sufficient to bond the strands together at their intersections. Then, the bonded mesh was etched in accordance with step **26** in an electropolishing solution of 300 milliliters phosphoric acid, 530 milliliters of glycerine, and 90 milliliters of water. A stainless steel cathode was employed in the electropolishing step and a current density of 0.12 amperes per square centimeter flowed for about 2 hours to reduce the diameter of the wire strands to about one fourth of their original dimension, thereby removing all of the electroplating except that forming the bonds **18**.

A mesh member made in accordance with the above example has an electron transmission characteristic of about 85 to 90 percent, which represents an increase over that of a conventional unbonded wire mesh. Thus, the mesh member of the present invention, in spite of bonding the intersecting wire strands to provide a much stronger and more stable mesh, is still more electron transparent than a conventional unbonded mesh.

Of course, other metals than stainless steel can be employed for the wire mesh, such as copper, nickel, tungsten, or alloys such as phosphor bronze. Likewise, the electroplated bonding material can be a metal other than nickel, such as copper, platinum or silver. For some applications, other coating methods than electroplating, such as vapor deposition, can be used to form the bonds. Also, chemical etching other than electropolishing can be used for removal of the excess bonding material, but electropolishing is preferred because it is extremely accurate and produces smooth wires of substantially uniform diameter.

It will be obvious to those having ordinary skill in the art that many changes may be made in the details of the above-described preferred embodiment of the present invention. For example, the mesh may be made of a different weave or with wires of noncircular cross section, including strands of rectangular or square cross section. Therefore, the scope of the present invention should only be determined by the following claims.

I claim:

1. A mesh electrode member, comprising:

a plurality of first metal strands laterally spaced from each other and extending in a first direction;

a plurality of second metal strands laterally spaced from each other and extending in a second direction across said first strands, said first and second strands being interwoven to form a mesh and having intersecting portions which cross other strands; and

bonding means including a plurality of bonds formed between intersecting portions of said first and second strands by bonding material provided as a coating on said strands only at said bonds, said first and second strands being uncoated by said bonding material except at said intersecting portions.

2. A mesh member in accordance with claim 1 in which the mesh is attached to a support ring surrounding said mesh.

3. A mesh member in accordance with claim 1 in which the mesh is made of wire of substantially circular cross section and which includes support means for mounting said mesh member in an electron tube.

4. A mesh member in accordance with claim 1 in which the bonding material is a metal different than the metal of said first and second strands.

5. A mesh member in accordance with claim 4 in which the bonding metal is nickel and the strand metal is stainless steel.

6. A mesh member in accordance with claim 1 in which the strand metal is taken from a first group consisting of stainless steel, copper, nickel and tungsten, and the bonding metal is taken from a second group consisting of nickel, copper, silver and platinum.

* * * * *