03-14-72 XR 3,649,856

United States Patent

O'Neill

[15] **3,649,856**

[45] **Mar. 14, 1972**

[54] TRANSDUCER FOR CONVERTING DIGITAL SIGNALS INTO LINEAR MOTION

[72] Inventor: **Cormac Garrett O'Neill,** Lafayette, Calif.

[73] Assignee: **Physics International Company,** San Leandro, Calif.

[22] Filed: **Aug. 3, 1970**

[21] Appl. No.: **60,263**

[52] **U.S. Cl.**.....**310/8.3,** 310/8.1, 310/8.5, 318/135

[51] **Int. Cl.**.....**H04r 17/00**

[58] **Field of Search**.....310/8, 8.3, 8.5, 8.6, 8.7, 310/12–14, 25, 26, 2, 8.1; 318/118, 135; 310/81

[56] **References Cited**

UNITED STATES PATENTS

3,389,274	6/1968	Robertson	310/8.3 X
3,390,559	7/1968	Steutzer	310/8.6 X
3,217,218	11/1965	Steele	310/8.3
3,218,534	11/1965	Casey	318/135
3,138,749	6/1964	Stibitz	310/26 X
3,445,688	5/1969	Thorel et al	318/135 X

Primary Examiner—J. D. Miller
Assistant Examiner—Mark O. Budd
Attorney—Samuel Lindenberg and Arthur Freilich

[57] **ABSTRACT**

A transducer for converting digital signals into linear motion is comprised of a hollow cylinder made of ferroelectric ceramic material made to have piezoelectric properties. The cylinder will move along the inside wall of a linear tube in response to a voltage pattern commutated through annular rings on the inside of the hollow cylinder such that voltage on a given ring increases in steps to a maximum and then decreases with the result that the hollow cylinder contracts in circumferential and axial dimensions in annular sections progressively from one end to the other in the direction of desired motion as the voltage pattern is commutated in that direction. A predetermined motion is achieved by one cycle commutation. For further motion the voltage pattern is commutated through additional cycles.

10 Claims, 3 Drawing Figures

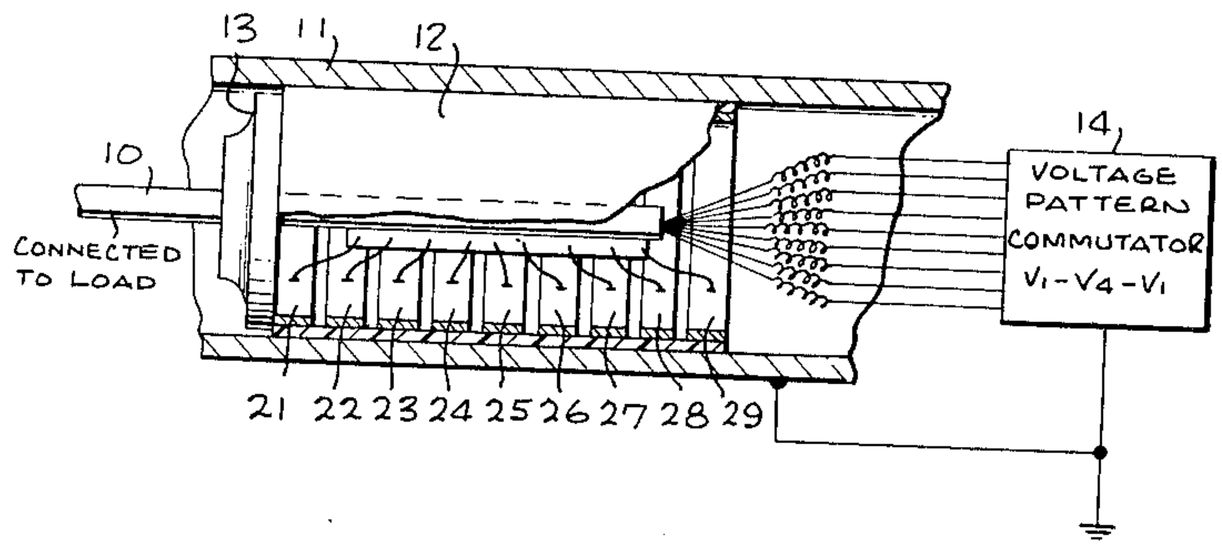

Fig. 1

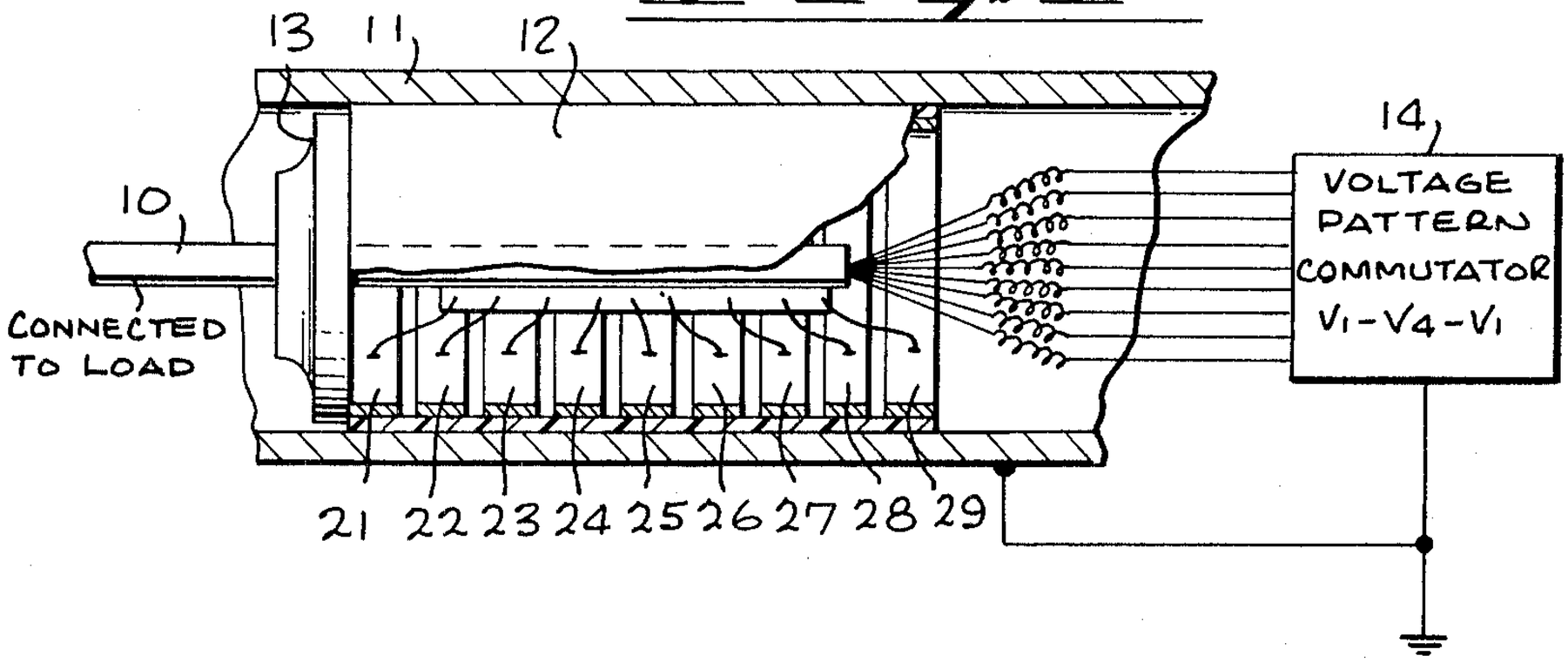

Fig. 2

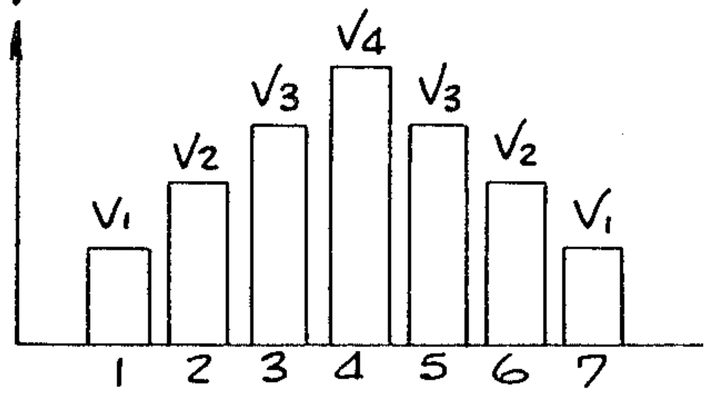

Fig. 3

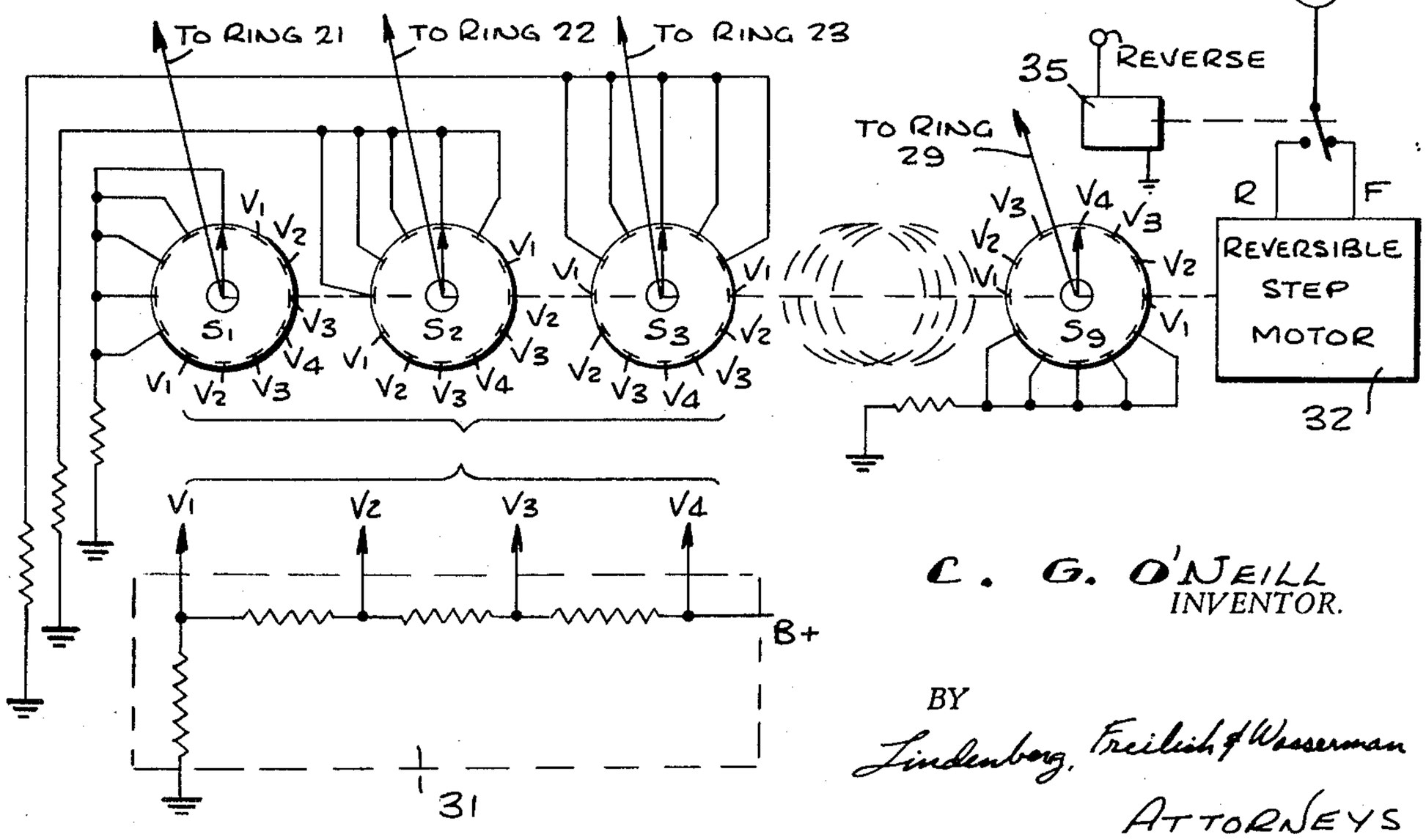

C. G. O'NEILL
INVENTOR.

BY
Lindenberg, Freilich & Wasserman
ATTORNEYS

TRANSDUCER FOR CONVERTING DIGITAL SIGNALS INTO LINEAR MOTION

BACKGROUND OF THE INVENTION

This invention relates to a linear motion transducer which converts electrical energy into mechanical energy, and more particularly to a transducer for converting electrical energy into linear motion in a precisely controllable manner without a feedback system characteristic of servomechanisms.

Servomechanisms have been widely used to convert a electrical energy into linear motion. If extremely high precision is required, a difficulty arises with servomechanisms in providing a transducer for converting the linear motion produced back into a precisely proportional electrical feedback signal for comparison. The problem of providing a precise feedback transducer is particularly acute if virtually infinite travel is required.

OBJECTS AND SUMMARY OF THE INVENTION

An object of this invention is to provide a transducer for converting electrical energy into mechanical energy in a precisely controllable manner.

Another object is to provide a transducer for converting electrical energy into linear motion with such precision that feedback is unnecessary.

Still another object is to provide a transducer for conversion of electrical energy to linear motion with virtually infinite travel and equally high force in every position of travel.

These and other objects of the invention are achieved by disposing a linear tube on a hollow cylinder made of material having piezoelectric properties. The cylinder has an outside diameter sufficiently large with respect to the internal diameter of the tube to provide a small interference therebetween. Conductive rings are spaced along the inner surface of the hollow cylinder and in electrical contact therewith. A voltage pattern commutator is connected to the tube and the rings for applying progressively greater and then smaller voltages to the rings sequentially in the direction of desired motion such that the voltage on a given ring increases to a maximum and then decreases. The commutation cycle is repeated until the desired motion is achieved. The piezoelectric effect of the hollow cylinder causes axial and circumferential contractions of precise amounts in each section as the voltages are sequentially applied to the rings. Thus, the end section to which a voltage is first applied moves in the direction of the end section to which a voltage is last applied, and in the process of removing the voltages, the end section from which a voltage is first removed expands circumferentially to provide increased friction against the wall in a new position displaced from its original position in the direction of commutation.

The novel features of the invention are set forth with particularity in the appended claims. The invention will best be understood from the following description when read in conjunction with the accompanying drawings.

BRIEF DESCRIPTION OF THE DRAWINGS

FIG. **1** illustrates partially in section a preferred embodiment of the present invention.

FIG. **2** illustrates a voltage pattern produced by a commutator for operation of the preferred embodiment illustrated in FIG. **1**.

FIG. **3** is a diagram of a voltage pattern commutator for the preferred embodiment of FIG. **1**.

DESCRIPTION OF THE PREFERRED EMBODIMENT

Referring now to FIG. **1**, a preferred embodiment of the present invention is shown for producing linear motion of an actuator rod **10** along the axis of a steel tube **11** having whatever length is necessary for the virtually infinite travel the present invention provides for the actuator rod **10**.

The actuator rod **10** is secured to one end of a hollow cylinder **12** by a flange **13**. The hollow cylinder **12** is made of ferroelectric ceramic material, such as barium titanate or lead titanate zirconate, made to have piezoelectric properties for circumferential and axial (transverse and longitudinal) contraction in response to application of a strong radial electric field. In other words, for reasons which will become more apparent, the axis of permanent polarization of the ceramic material is chosen to be everywhere along the radii of the ceramic cylinder, while the mutually perpendicular axis along which the desired piezoelectric effect in a given segment is produced (in response to an electric field in the direction of the axis of polarization) is longitudinal, i.e., parallel to the axis of the cylinder, and circumferential.

The ceramic cylinder **12** is fitted inside the steel tube **11** with a small interference, e.g., 0.0007 in., such that, in the absence of a radial electric field, the cylinder will be held stationary in the tube **11** by the force of friction. Upon application of a radial electric field of proper polarity to an annular section on one end, the ceramic material will contract circumferentially to substantially reduce and virtually eliminate the small interference, i.e., virtually eliminate the force of friction and contract axially to allow that section of the cylinder to move toward the other end of the cylinder. The radial electric field will produce some radial expansion of the material, but that expansion is more than outreached by the circumferential contraction, thereby allowing the simultaneous axial contraction to pull the edge of the ceramic cylinder in toward the other end of the cylinder.

If the radial electric field is applied uniformly throughout the entire length of the hollow ceramic cylinder **12**, both ends will move toward the center, thereby producing slight motion of the actuator rod **10** to the right as viewed in FIG. **1**. Upon removing the electric field, the ceramic cylinder will simultaneously expand circumferentially and radially to restore the force of friction and, assuming no load on the actuator rod **10**, restore the actuator rod to its original position. Therefore, no useful work is accomplished by simultaneously applying a uniform electric field to all sections of the cylinder.

To produce linear motion of the actuator rod **10** along the axis of the steel tube **11** in a precisely controllable manner without a feedback system characteristic of servomechanisms, the electric field is progressively increased and then decreased by a voltage pattern that is commutated through all annular sections in sequence in the direction of desired motion. That is accomplished by a voltage pattern commutator **14** having a plurality of output terminals connected to a plurality of evenly spaced rings of conductive material in electrical contact with the inside surface of the hollow cylinder **12**. The portion of the cylinder **12** around a given ring from the center of the space between it and the next ring on one side to the center of the space between it and the next ring on the other side defines a "section."

To facilitate connecting the output terminals of the commutator **14** to the conductive rings, one end of the actuator rod **10** is extended through the flange **13** into the hollow cylinder **12**. A tab **30** secured to that end of the rod is then used to provide a firm anchor for coiled leads used to connect the output terminals of the commutator **14** to the rings so that, as the cylinder **12** carries the actuator rod **10** to the left as viewed in FIG. **1**, connections of the leads to the rings will not be stressed.

The voltage pattern commutator **14** will respond to a control signal in the form of a pulse to sequentially apply voltages to the rings **21** to **29** in that order for motion of the actuator **10** to the right. Assuming all voltages are of the same amplitude, the piezoelectric effect of the electric field applied to successive sections of the cylinder **12** is as follows. When the voltage is applied to the ring **21**, the section of the cylinder between the ring **21** and the steel tube **12** will simultaneously contract circumferentially and axially. Since the rest of the cylinder does not contract, contraction of the section covered by the ring **21** will cause the left edge of the cylinder **12** to move

toward the right. Once the voltage is applied to the ring **21**, it is retained until the voltage has been applied to the next ring **22**. At the same time, the voltage to the ring **21** is increased so that it contracts more.

As the voltage is applied to and increased progressively on each successive ring **21** to **24**, the piezoelectric effect is substantially the same as described for the first section covered by the ring **21** with the result that the left end of the cylinder **12** is moved to the right a precise controllable amount which is substantially the sum of the axial contractions of the seven sections. The precise amount of axial contraction of each section is controlled by the amplitude of the voltage applied.

As the commutator continues to apply a voltage to the next three rings **25** to **27**, and progressively increase the voltages applied as the commutator advances, the voltages on the rings decrease in steps such that a pattern of voltage amplitudes **1** to **7** shown in FIG. **2** will be present on the rings **21** to **27**. Thereafter, as the commutator continues to apply and increase to a maximum voltages to the remaining sections **28** and **29**, voltage is progressively decreased and removed from sections **21** to **25** in sequence. When the commutator has completed one full cycle, the pattern of FIG. **2** will have been commutated out of the cylinder **12** to the right in the direction of desired motion, and as voltage is decreased and removed from the rings **21** to **29** in that order, the associated sections of the cylinder **12** will expand to restore full friction against the wall of the tube **11** in sequence, thereby securing the cylinder in its new position.

It should be noted that when the voltage pattern of FIG. **2** has been applied to the rings **21** to **27**, the left end of cylinder **12** will have moved toward the right a predetermined amount. Thereafter, as the voltage pattern is commutated out to the right, the left end of the cylinder will not move further to the right, but the right end of the cylinder will move to the right the same predetermined amount as the left end moved. The rod **10** is, of course, moved to the right the same predetermined amount. Each time the voltage pattern commutator **14** is cycled in response to the control signal, the actuator rod **10** will be moved the same predetermined and precise amount. To reverse the direction of motion, the direction of the commutator **14** is reversed to cause the voltages to be commutated to the rings **21** to **29** in reverse order.

When a voltage is applied to a given ring, there will be some contraction of the ceramic material in the spaces between that ring and adjacent rings due to fringing of the electrical field. This fringing may extend into the ceramic material around adjacent rings to a greater or lesser extent depending upon the voltage amplitude. Consequently, as the voltage amplitude is increased on given ring while the voltage pattern is being commutated, the fringing increases progressively to enhance motion of the cylinder **12** in the direction of voltage commutation toward the center. Once the maximum voltage is applied to that given ring, and as the process of applying voltages to the remaining rings progresses, it is desirable to progressively decrease fringing so that the piezoelectric effect of the minimum voltage applied to the given ring is confined to the associated section of the cylinder **12** with fringing only into the ceramic material in the spaces between it and adjacent rings. In that manner, commutation of the voltage pattern of FIG. **2** through the rings **21** to **29** in a given direction will produce a caterpillarlike motion of the cylinder **12**.

An illustrative embodiment of the voltage pattern commutator is shown in FIG. **3** by way of example, and not by way of limitation. It comprises a voltage dividing network **31** connected to a voltage source (B+) to provide at four output terminals four different voltage levels necessary to produce the pattern of FIG. **2**. The four output terminals are connected to contacts of ganged rotary switches S_1 to S_9 as shown to commutate the voltage pattern across the rings **21** to **29**. Each switch has 12 contacts so that as the switches are rotated by a reversible step motor **32** the voltage pattern is commutated according to the following table where the voltage levels are identified by the numerals 1, 2, 3 and 4.

RING NO.	SWITCH POSITIONS											
	1	2	3	4	5	6	7	8	9	10	11	12
21	1	2	3	4	3	2	1	0	0	0	0	0
22	0	1	2	3	4	3	2	1	0	0	0	0
23	0	0	1	2	3	4	3	2	1	0	0	0
24	0	0	0	1	2	3	4	3	2	1	0	0
25	0	0	0	0	1	2	3	4	3	2	1	0
26	0	0	0	0	0	1	2	3	4	3	2	1
27	0	0	0	0	0	0	1	2	3	4	3	2
28	0	0	0	0	0	0	0	1	2	3	4	3
29	0	0	0	0	0	0	0	0	1	2	3	4

It should be noted that as the voltage pattern is being commutated out of one end, it is being commutated in at the other end. This is true, regardless of the direction of rotation of the switches, because only 12 contacts are provided to commutate a pattern of seven voltages through nine rings. Consequently, a voltage is applied to one or more rings at all times. By providing 16 contacts, the voltage pattern may be commutated out completely leaving all rings connected to circuit ground in one rest position. To start the commutator for one cycle, a flip-flop may be set. At the end of the cycle, detection of the rest position may be employed to reset the flip-flop which in turn inhibits the transmission of clock pulses to the motor through a gate. In that manner the total motion of the cylinder **12** is determined by the number of times the flip-flop is set.

In the illustrative embodiment, there is no rest position for the rotary switches. Clock pulses are applied to the motor **32** through a gate **33** in response to a signal from a control unit **34**. A relay **35** may be employed to switch the clock pulses from a forward terminal F to a reverse terminal R in response to a REVERSE control signal. In either direction, the total motion of the cylinder **12** is determined by the length of the period during which the control unit **34** enables the AND-gate **33** to transmit clock pulses from a source **36**. The control unit is also connected to the clock pulse source in order to time the periods of desired motion may be set into a counter in the control unit. If the counter is connected to count down to zero and stop in response to clock pulses, when the count of zero is reached, the motion desired will have been completed and the gate **33** disabled. To conserve power, the voltage source (B+) may be disconnected from the voltage divider **31** at all times that the counter is at the count of zero.

It should be noted that while rotary and relay switches are shown in the disclosed exemplary embodiment, in practice solid-state components would be used to implement the functions of those switches because they are faster and require less space. Moreover, the solid-state technology has advanced sufficiently to made such components less expensive than the rotary and relay switches. However, even if that were not so, the advantage of speed would require the use of solid-state components in some applications.

It should also be noted that whereas a voltage pattern of seven segments is disclosed, in practice any number more than about five may be used, preferably an odd number. In general, the larger the number and the greater the center voltage, the larger the motion for one cycle of the commutator, but since there is a practical limit to which the sections of the cylinder may be stressed, there is generally little to be gained in providing more than seven or nine sections, particularly since all the motion desired may be achieved by simply recycling the commutator.

Although particular embodiments of the invention have been illustrated and described herein, it is recognized that modifications and variations are possible, such as disposing the ceramic cylinder outside of the steel tube with external rings. However, such a design has the disadvantage of placing the ceramic cylinder in tension, thus requiring some method of preloading the ceramic material to avoid fracture. Consequently, it is intended that the claims be interpreted to cover all modifications and variations as may readily occur to those skilled in the art.

What is claimed is:

1. A transducer for converting electrical energy into linear motion, comprising:

a linear tube having a circular cross section and made of rigid conductive material;

a hollow cylinder coaxially disposed within said tube along the length of said tube, said cylinder being substantially shorter than said tube and being made of material having piezoelectric properties with permanent polarization so oriented as to cause axial and circumferential variation in dimensions in response to a radial electric field of a given polarity, said cylinder having diameter of such dimension with respect to the diameter of said tube as to provide small interference therebetween;

a plurality of conductive rings disposed on the side of said cylinder opposite the side in interference with said tube and in full circumferential contact with said cylinder, said rings being spaced along the length of said cylinder from one end to the other; and

means for commutating a pattern of voltages across said rings in a given direction such that for a given ring the voltage applied thereto increases from circuit ground potential to a predetermined maximum level and back to zero.

2. A transducer as defined in claim 1 wherein said voltage pattern is comprised of a number of voltages less than the number of said rings, and the number of successively larger voltages between zero and said maximum applied to said given ring is equal to the number of successively smaller voltages between said maximum and zero.

3. A transducer as defined in claim 2 wherein said number of voltages in said pattern applied to said given ring from zero through said maximum to zero is equal to two less than the number of said rings.

4. A transducer as defined in claim 3 wherein said number of voltages in said pattern is odd.

5. A transducer as defined in claim 1 including a rigid member carried by said cylinder as an actuator for a load.

6. A transducer for converting electrical energy into linear motion, comprising:

a linear tube having circular cross section and made of rigid conductive material;

a hollow cylinder disposed within said tube along the length of said tube, said cylinder being substantially shorter than said tube and being made of material having piezoelectric properties with permanent polarization so oriented as to cause axial and circumferential contraction in response to a radial electric field of a given polarity, said cylinder having an outside diameter sufficiently large with respect to the internal diameter of said tube to provide small interference therebetween;

a plurality of conductive rings disposed on the inside of said cylinder and in full circumferential contact with said cylinder, said rings being spaced along the length of said cylinder from one end to the other; and

means for commutating a pattern of voltages across said rings in a given direction such that for a given ring the voltage applied thereto increases from circuit ground potential to a predetermined maximum level and back to zero.

7. A transducer as defined in claim 6 wherein said voltage pattern is comprised of a number of voltages less than the number of said rings, and the number of successively larger voltages between zero and said maximum applied to said given ring is equal to the number of successively smaller voltages between said maximum and zero.

8. A transducer as defined in claim 7 wherein said number of voltages in said pattern applied to said given ring from zero through said maximum to zero is equal to two less than the number of said rings.

9. A transducer as defined in claim 8 wherein said number of voltages in said pattern is odd.

10. A transducer as defined in claim 6 including a rigid member carried by said cylinder as an actuator for a load.

* * * * *