United States Patent

[11] **3,634,026**

[72] Inventors **William L. Kuechler**
Jenkintown;
Lyle E. McCoy, Norristown, both of Pa.

[21] Appl. No. **844,995**
[22] Filed **July 25, 1969**
[45] Patented **Jan. 11, 1972**

[73] Assignee **Proctor & Schwartz, Inc.**
Philadelphia, Pa.

[54] **APPARATUS AND METHOD THERMAL REGENERATIVE GAS PROCESSING**
12 Claims, 5 Drawing Figs.

[52] **U.S. Cl.** ..... **23/2 C,** 23/277 C, 110/8 A, 263/15
[51] **Int. Cl.** **B01d 53/34,** F23g 7/06
[50] **Field of Search** ..... 23/2.1, 2.2, 3.1, 4, 277 C, 2 C; 263/15; 110/8 A

[56] **References Cited**

UNITED STATES PATENTS

1,173,297	2/1916	Miller	263/15 X
2,766,031	10/1956	Forter	263/15
2,898,202	8/1959	Houdry et al.	23/2 S
2,946,651	7/1960	Houdry	23/2 S
3,067,002	12/1962	Reid	23/2 E
3,109,715	11/1963	Johnson et al.	23/2 E
3,172,251	3/1965	Johnson	23/2 E
3,211,534	10/1965	Ridgway	23/277 C
3,295,919	1/1967	Henderson et al.	23/2 E
3,511,595	5/1970	Fuchs	23/2 S

Primary Examiner—Earl C. Thomas
Attorney—Robert S. Vermut

ABSTRACT: An integrated incinerator and heat exchanger unit of modular construction capable in conjunction with other units or alone of efficiently removing pollutents carried by the exhaust gas flow of an industrial system. The unit comprises a boxlike enclosure having a series of internal flues each containing a static, heat exchange, packed bed of particulate material and being in flow communication with the other flues of a unit through a common chamber, the chamber including one or more burners for heating the beds, each unit having a common inlet duct and a common outlet duct with flow control means therein to permit predetermined entry and exit of flow into and out of respective flues, the unit being capable of burning out trapped solids in the heated beds by means of temporary isolation of their respective flues, and the unit including a self-limiting ambient air entry for each flue to purge its bed and improve incineration efficiency.

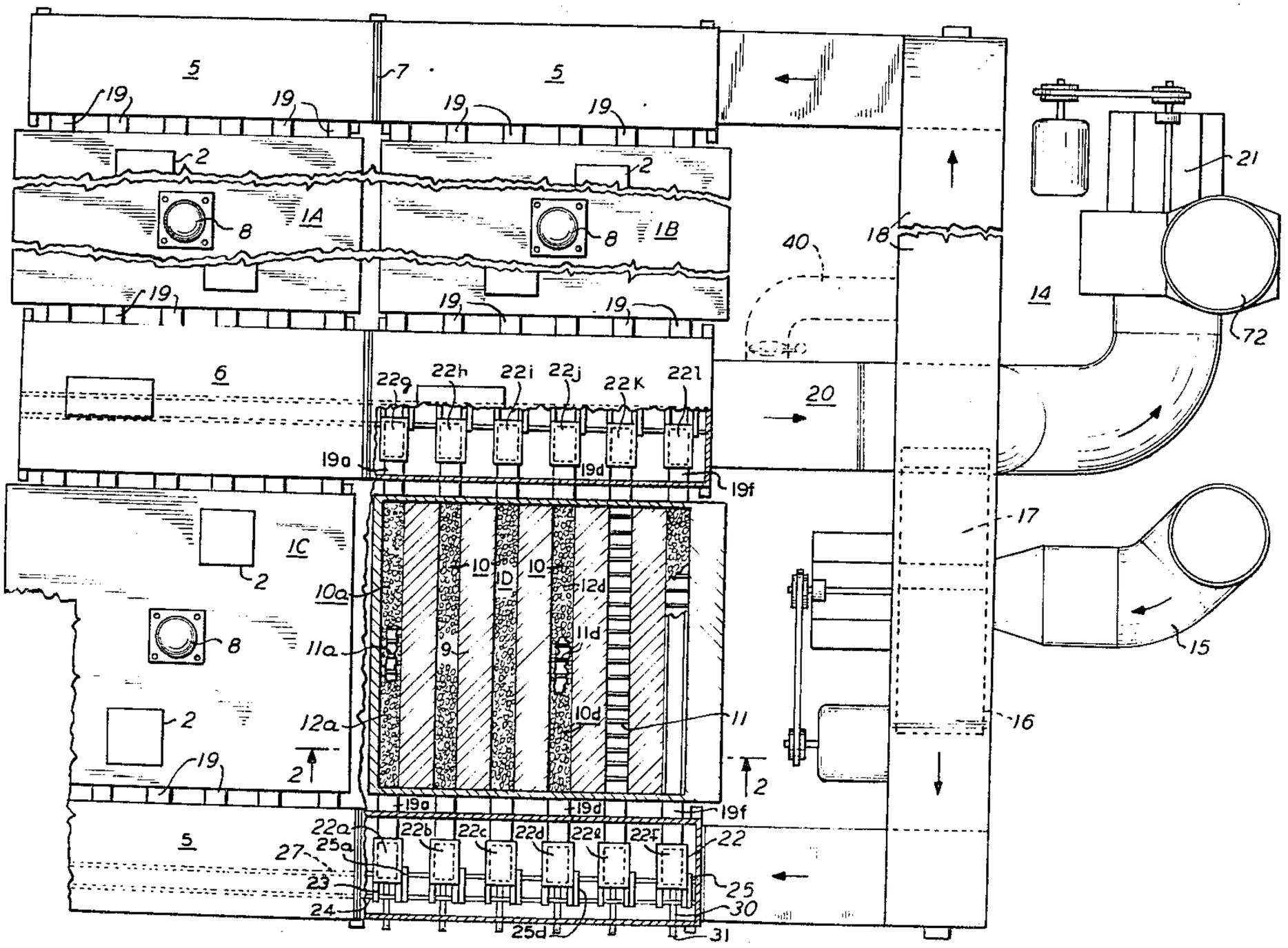

PATENTED JAN 1 1 1972

3,634,026

SHEET 1 OF 4

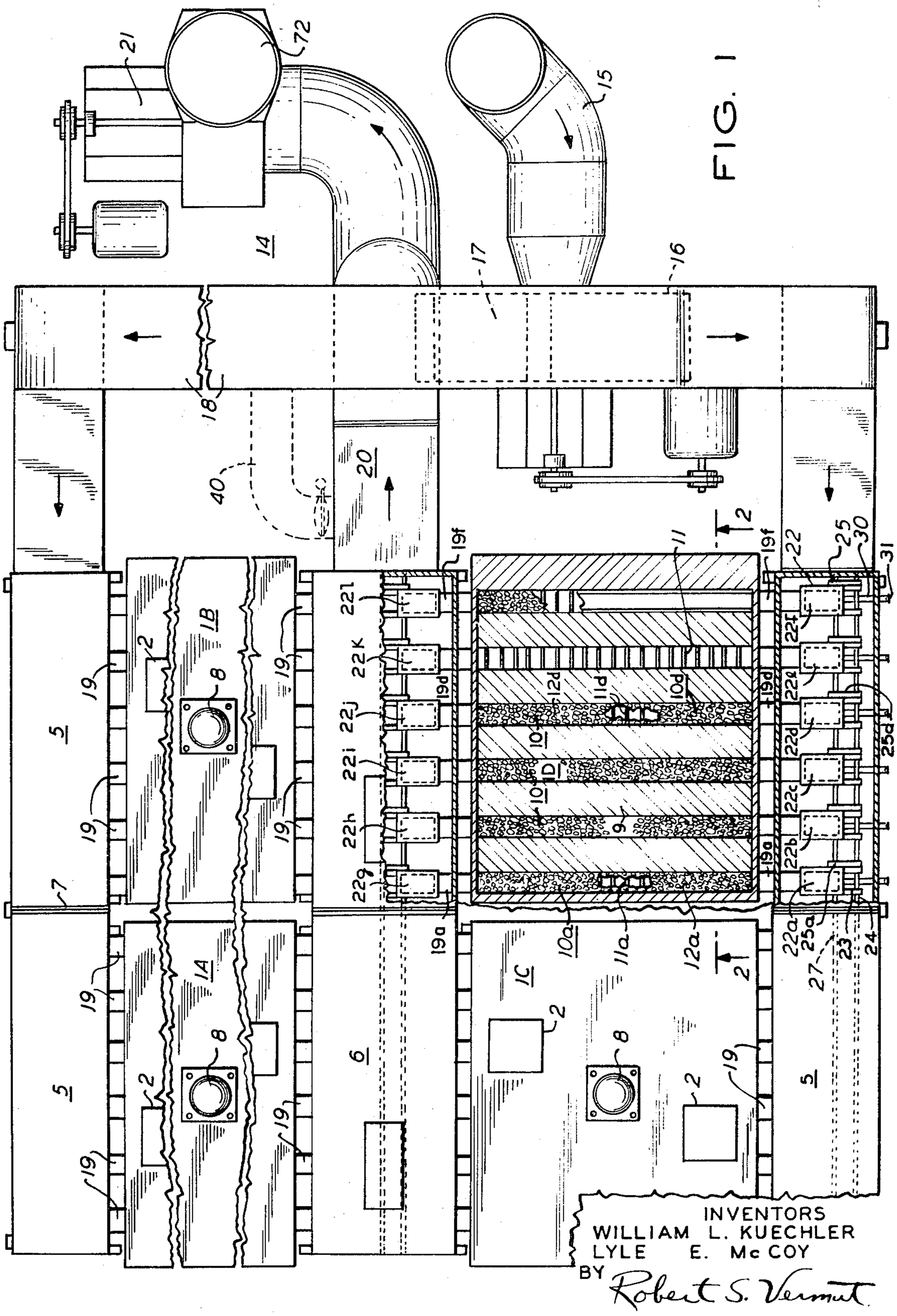

FIG. 1

FIG. 2

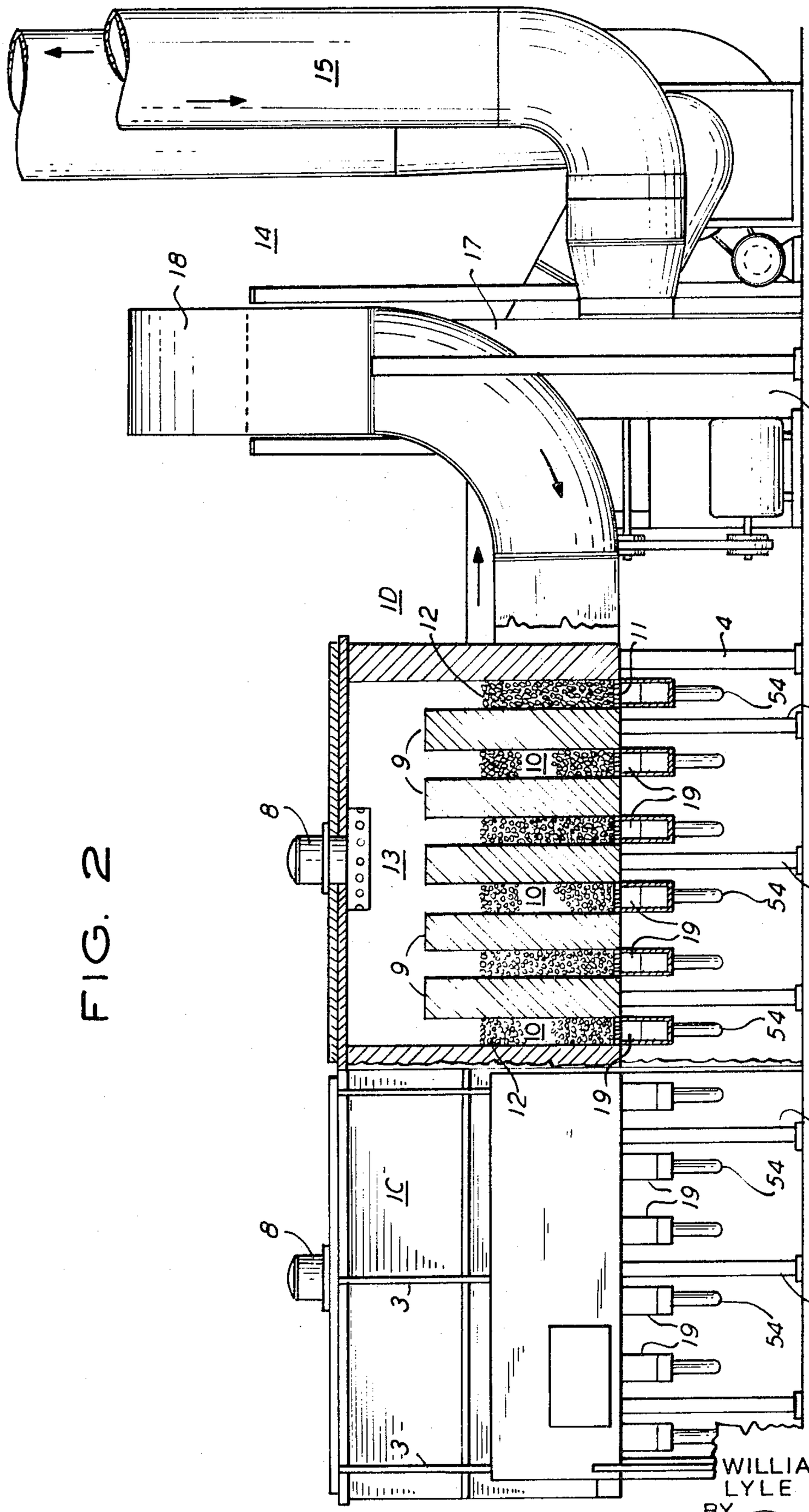

INVENTORS
WILLIAM L. KUECHLER
LYLE E. McCOY
BY Robert S. Vermont
ATTORNEY

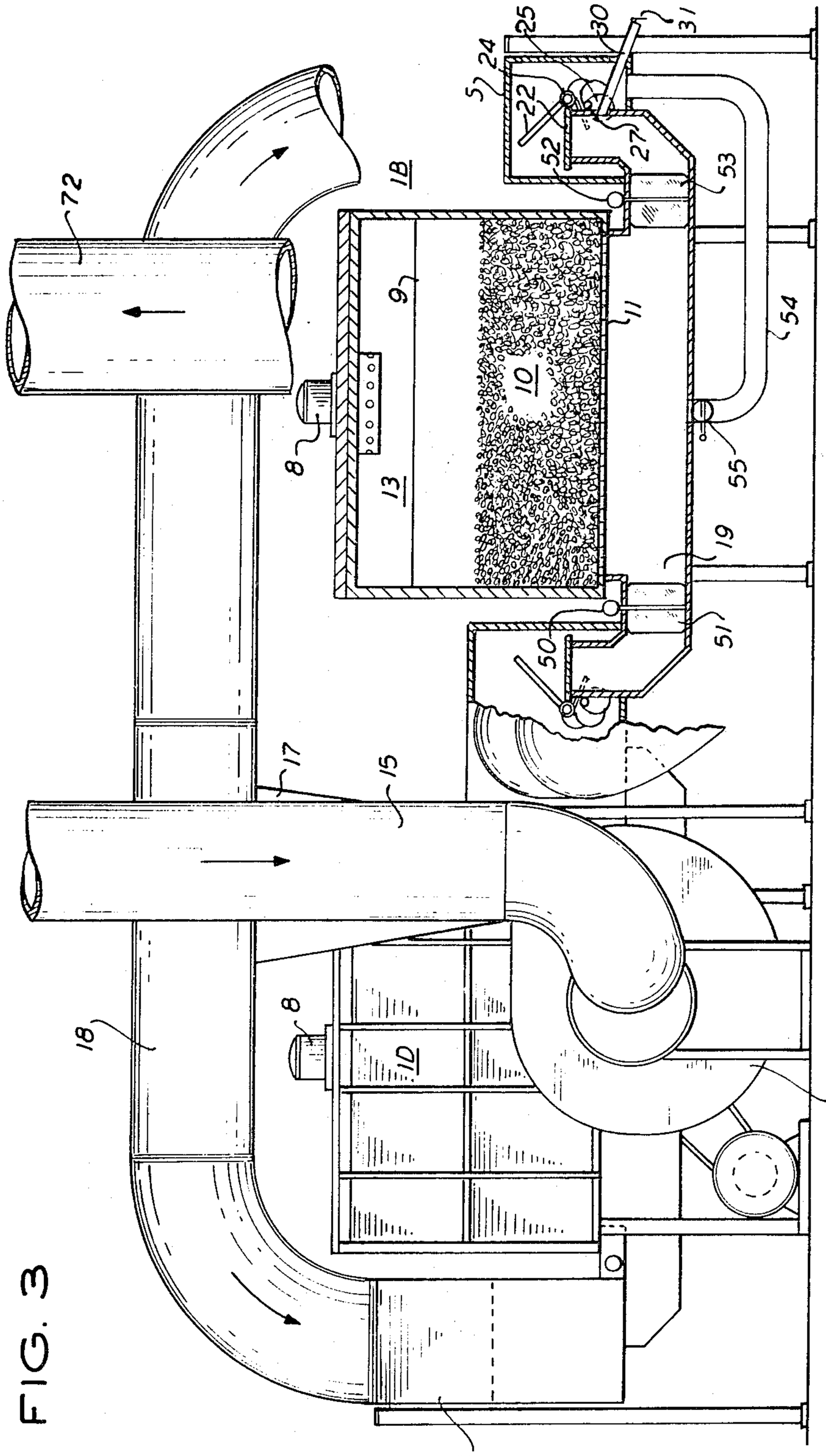

FIG. 3

INVENTORS
WILLIAM L. KUECHLER
LYLE E. McCOY
BY Robert S. Vermut
ATTORNEY

FIG. 4

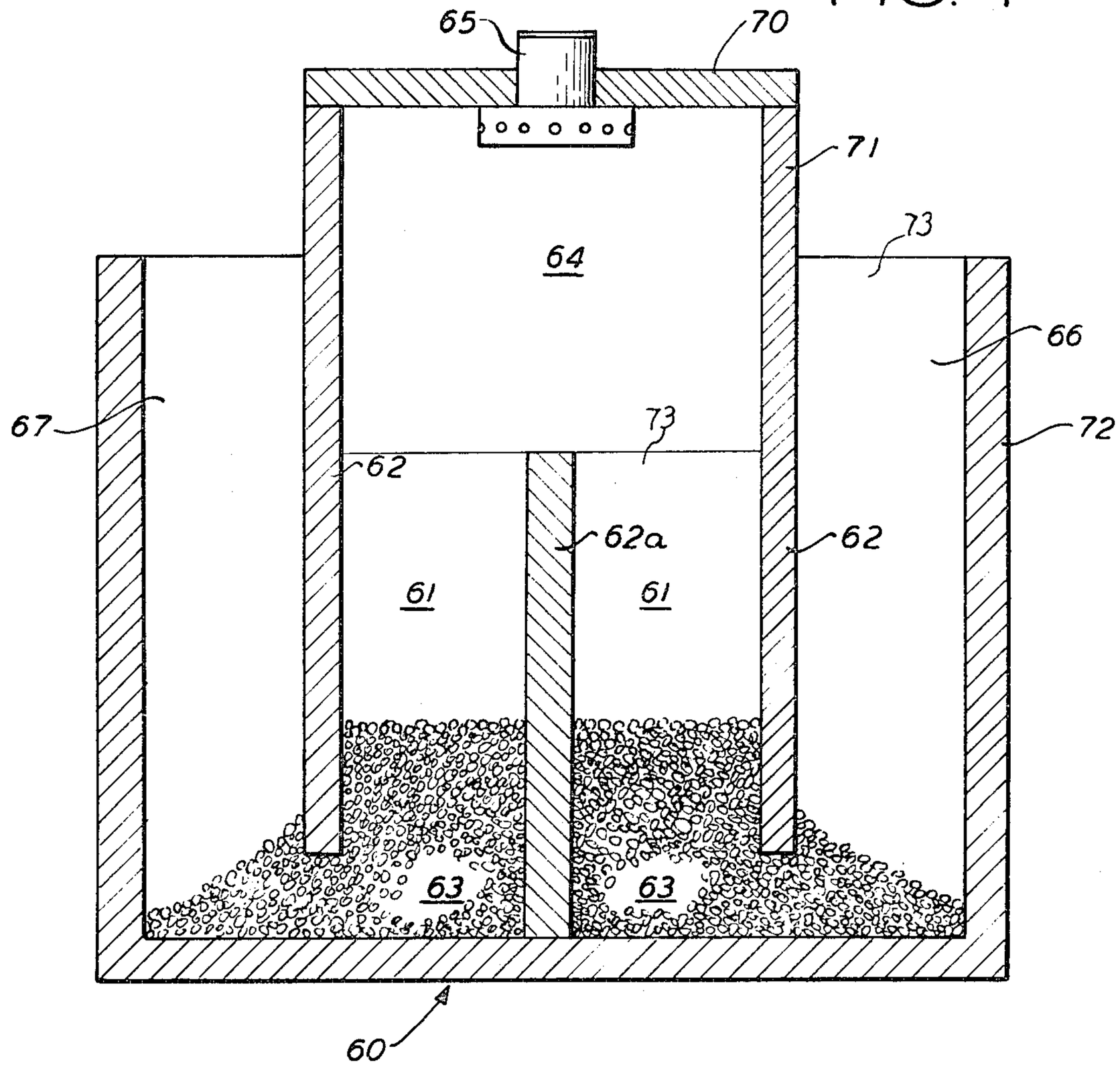

FIG. 5

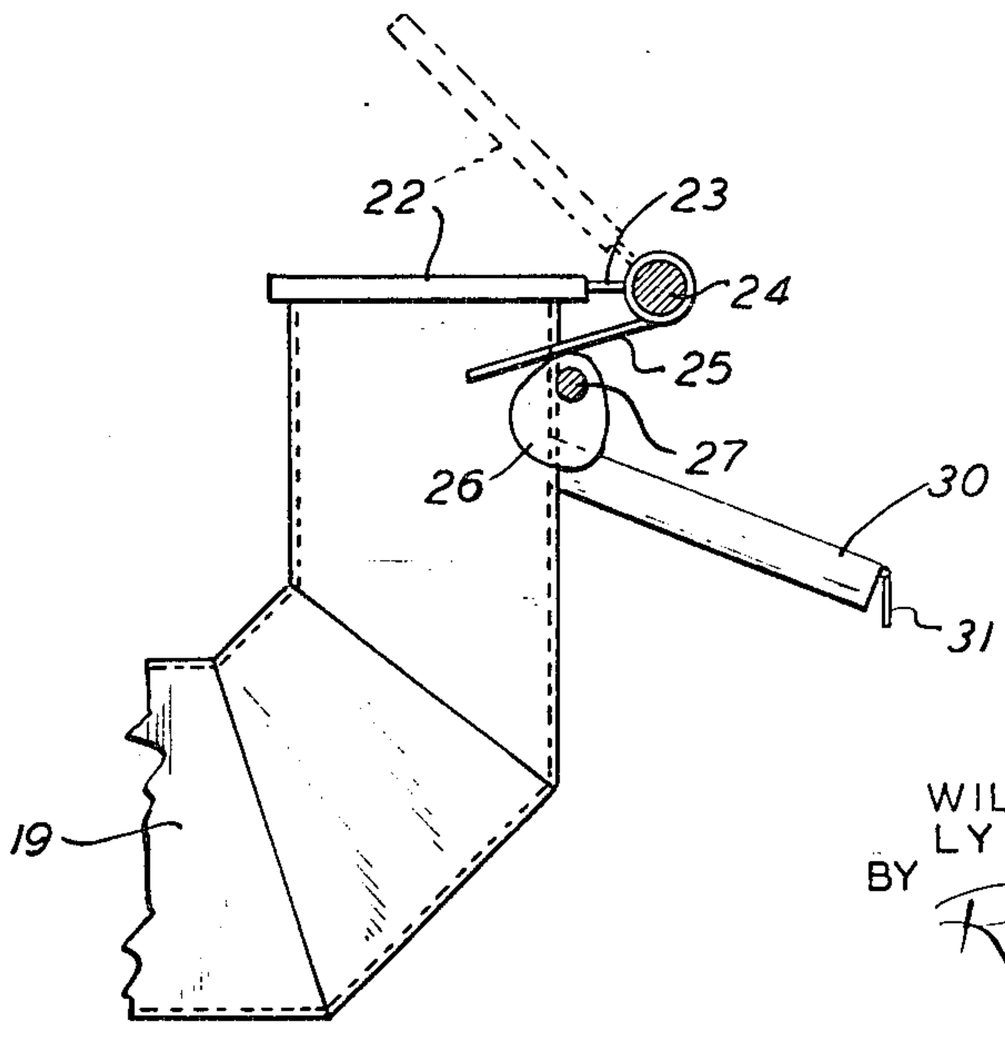

INVENTORS
WILLIAM L. KUECHLER
LYLE E. McCOY
BY Robert S. Vermut
ATTORNEY

APPARATUS AND METHOD THERMAL REGENERATIVE GAS PROCESSING

BACKGROUND OF THE INVENTION

1. Field of the Invention

This invention relates to the field of fluid purification systems and, more particularly, to the field of air purification through thermal regeneration by oxidation of pollutants in exhaust gas flows of industrial systems.

2. Description of the Prior Art

The prior art has developed over an extended period of time in the area of integrated incinerator and heat-exchanger apparatus for application of thermal regeneration to air purification. Certain of the prior art, as represented by U.S. Pat. Nos. 2,121,733 and 2,898,202, show enclosures comprising a pair of compartments each containing a static, heat exchanger being exposed to periodic flow reversal for maintenance of bed temperature.

However, the prior art has not made adequate provisions for efficient increase of incineration capacity especially with the emphasis today on pollution control. Also, problems relating to efficiency of incineration have arisen with respect to the prior art and, after extended study by applicants, the problems have been defined to be, among others, the lack of proper flow patterns, uncontrollable flow resistance in the heat exchange beds during flow because of trapped solids carried by the inlet flow, and the lack of bed-purging of entrapped gas at flow reversal periods. Thus, the prior art has failed to meet the needs of industry for a system which can have a readily increased capacity as well as provide improved efficiency in incineration.

Applicants have recognized and defined the problems of the prior art and have proposed solutions therefor, as hereinafter described in detail, to provide preferred purification systems.

SUMMARY OF THE INVENTION

This invention is directed generally to a continuous flow, bed-purgeable purification system having controllable bed flow resistance, the system including the process associated therewith.

With reference to the preferred embodiment, this invention is directed to a modular, integrated incinerator and heat-exchanger unit which in conjunction with other units may accommodate increased demands for pollution control. The individual unit is an enclosure comprising a plurality of internal flues each having a static, heat exchange, packed bed of particulate material at elevated temperatures through which gases carrying pollutants from an exhaust flow of an industrial system are passed with the pollutants thereby oxidized. Inlet and outlet ducts, which can be extended for a plurality of units, are positioned below the beds and communicate with the flues through timed actuator equipped flow control means, the flues communicating with each other internally by a common chamber having one or more burners therein for restoring heat to the beds during operation as flow, by the predetermined opening of certain of the control means in the inlet and outlet ducts, passes by the burners and down through a bed previously cooled by upward flow to the chamber. Any one flue during operation may be isolated by dampers for burning out trapped solids in its bed while flow continues in the remainder of the unit. Also, an ambient air entry for each flue is provided on its inlet side to permit increased incineration efficiency by purging the flue bed of entrapped gases.

It is there an object of the present invention to provide a thermal regenerative fluid purification system which provides improved efficiencies and improved capacity capabilities.

This and other objects, features and advantages of the present invention will become more apparent when viewing the following description in the light of the accompanying drawings and claims.

BRIEF DESCRIPTION OF THE DRAWINGS

FIG. **1** is a plan view, cut away in part, showing a system of modular construction having four units;

FIG. **2** is an elevation view of the system of FIG. **1** and cut away in part in section along line **2**—**2** of FIG. **1**;

FIG. **3** is an end view, cut away in part, of the system shown in FIG. **1**;

FIG. **4** is another embodiment of the present invention; and

FIG. **5** is an enlarged view of the termination area of the communication duct as shown in FIG. **3**.

DESCRIPTION OF THE PREFERRED EMBODIMENT

Referring now more particularly to the drawing with reference numerals, in FIG. **1** a system of modular construction having four units generally designated at **1A**, **1B**, **1C** and **1D** are shown. Each of the units is a boxlike enclosure in shape and is made of a conventional ceramic material or firebrick with access openings **2** to the interior thereof for purposes of servicing, maintenance and repair. Each of the modular units and the construction as a whole may be encased and reinforced, depending on the end use and the construction materials utilized, with structural steel I- or H-beams or angle members as shown at **3** and may be supported above ground by legs **4**. Each individual unit has—adjacent to a pair of its parallel sides—opposed metallic flow ducts or conduit means designated generally at **5** and **6** being, respectively the inlet duct and the outlet duct.

In the instance where a plurality of units are juxtaposed to form a modular construction, conventional duct joint means **7** are utilized to permit flow communication between adjacent inlet and outlet ducts. Also, in an arrangement of four modular units, as shown in FIG. **1**, the outlet duct **6** may be common to both pairs of units although individual outlet ducts of a size similar to ducts **5** may be utilized with the flow therethrough joining in a common duct for exhaust through a chimney or stack. Each of the units has a central top burner **8** which may be gas or oil fed or a combination thereof and provides a flame into the common chamber generally designated at **13** above the dividers **9** which define a plurality of parallel flues generally designated at **10**, which, in the case of the units of the preferred embodiment, are six in number. The dividers are preferably made of the same material as the enclosure. The plurality of flues results in a multiplicity of flow paths reducing variations in process-system flow rates and static pressures to a level acceptable for application to most modern continuous or steady state processes.

Each of the flues, as seen in FIGS. **1** and **2**, has a grill or expanded metal-type flooring **11** which supports a static, heat exchange bed **12** of particulate material which could be pieces of ceramic, steel, or other material having a sufficiently high melting point, good heat transfer characteristics, and good flow-through characteristics. Each of the flues communicates through the grill or expanded metal flooring **11** with a communication duct or passage means **19** which provides flow communication between the ducts **5** and **6** and respective flues. Thus, each boxlike enclosure has a plurality of flues in common communication with an upper chamber **13**, providing flow communication between the flues above the tops of the dividers, and in individual communication with inlet and outlet ducts **5** and **6** through communication ducts **19** extending below the dividers.

The inlet ducts **5** as seen in FIGS. **1**, **2**, and **3** are connected through a system of ductwork designated generally at **14** with the exhaust gas flow from one of numerous types of industrial systems such as a dryer, oven, kiln, hood, etc. The exhaust gas flow from an industrial system is fed through the ductwork **14** by a push-pull blower system with the exhaust gas flow entering the purification system through primary intake duct **15**, the blower chamber **16** and then through secondary intake duct **17** to distribution duct **18** which splits the flow to the inlet ducts **5** of the multiple unit system. After elimination of a substantial percentage of the pollutants therein, the gas flow enters the outlet duct **6** and from there moves through exhaust duct **20**, fan discharge chamber **21** and exhaust stack **72**.

The details with respect to the flow of the gas from the inlet duct **5** through the beds of particulate material and into the outlet duct **6** will now be discussed.

Each flue **10** has related therewith a communication duct **19** which terminates in the inlet and outlet ducts **5** and **6**. Each duct **19** at both its ends in the ducts **5** and **6** has, as best seen in FIGS. **3** and **5**, a timed actuator-equipped flow control means such as the closure member **22** which is pivotally connected through arms **23** to a horizontally extending pivot shaft **24** so as to be capable of movement from a horizontal position closing its respective end of the duct **19** to an almost vertical position opening the end. A cam follower **25** comprises an arm extending downwardly toward the enclosure at an angle of approximately 30° to the horizontal, is fixed with respect to its respective closure member **22** and is pivotable on the shaft **24** therewith. Timed actuation occurs as each follower moves in response to a cam **26** fixed on shaft **27** rotated by a motor not shown. Thus, each of the six communication duct ends within each of the ducts **5** and **6** has an arrangement of closure member, cam follower and cam so that predetermined related openings of the communication duct ends may be accomplished. The relationship of openings is determined by the angular relationship of the cams **26** about the axis of shaft **27** so that sequential openings may be accomplished by angularly displacing the cams **26** about the shaft axis at equal angular intervals.

With a central, top gas or oil burner **8**, it has been determined that increased incineration efficiency is accomplished by the opening of respective communication duct ends within the inlet and outlet ducts **5** and **6** sequentially in a somewhat sinusoidal manner so that any inflow on the inlet side on entering chamber **13** will pass adjacent the central burner before exiting to the outlet duct.

For purposes of specific illustration of the flow patterns, the closure members **22** have been designated in the cutout portion of FIG. **1** as **22***a*–**1** with corresponding designations (**25***d*, **11***d*, **12***d*, etc.) for flues, ducts, beds, etc. The exhaust gas flow from an industrial system such as a dryer is initially received within the primary intake duct **15** and then passes through the blower chamber **16** and up through secondary intake duct **17** into the distribution duct **18** which divides the flow to the inlet ducts **5**. As the cam shaft **27** rotates, in order of sequence and viewing the cut away portion of FIG. **1**, the closure member **22***a* of communication duct **19***a* is opened as the cam **26** moves along the follower **25***a* raising it and the member **22***a* to which it is fixedly related so that member **22***a* is in open position. On the outlet duct side, the sequential opening of the closure members is staggered in relation to members on the inlet duct side so that closure member **22***g* of the communication duct **19***a* is in closed position when the member **22***a* is in open position. This is requisite to operation of the system because otherwise flow would merely pass from the inlet duct to the outlet duct without passing through the heat exchange beds. The sequential operation of the closure members in the outlet duct is such that when the closure member **22***a* is in open position, the closure member **22***j* is in open position. Thus, the flow from the inlet duct **5** enters the communication duct **19***a* at its end opened by member **22***a*, and, because the other end of communication duct **19***a* is closed by member **22***g*, moves through the expanded metal flooring **11***a* of the flue **10***a*, up through the bed **12***a* of particulate material at elevated temperatures, and into chamber **13** where it is heated by the oil or gas burner **8**. The flow is then forced by the push-pull blower system down the flue **10***d*, its bed **12***d* of particulate material and expanded metal flooring **11***d* into the communication duct **19***d* and from there into outlet duct **6**. The flow, of course, chooses flue **10***d* because the closure member **22***j*, associated only with the flue **10***d* on the outlet side is in open position with the other closure members on the outlet side being substantially closed. It can, therefore, be seen that the gas flow from the inlet duct moving up flue **10***a* and down flue **10***d* must come into contact with the flame of gas or oil burner **8** in chamber **13**. This desired relationship between flow and flame is accomplished by the common openings of closure members **22***b* and **22***k*, **22***c* and **22***l*, **22***d* and **22***g*, **22***e* and **22***h*, and **22***f* and **22***i*, with the openings of members on any one side, inlet or outlet, being sequential and with the flow in each instance passing in chamber **13** adjacent the flame of the burner **8** to thus restore heat thereto.

It should be noted here, although explained in more detail hereafter, that the gas flow on the inlet side of the units is at a relatively low temperature and, as it passes upward through a bed of particulate material at elevated temperature toward the chamber **13**, experiences a heat-exchange relationship with the bed and is heated by the bed thereby reducing the temperature of the bed through which it is passing. In order to restore the temperature of the bed to the desired elevated level for pollutant auto-ignition or oxidation, the flow that passes downward through the bed going to the outlet duct is heated to elevated temperature in chamber **13** as it passes adjacent the flame of the burner so that reversed heat exchange with the bed through which it is downwardly passing occurs with the bed being returned to the desired elevated temperatures. For example, when closure member **22***a* is open, the flow at relatively low temperature passes to chamber **13** through the bed **12***a* at elevated temperatures cooling the bed, but, when the closure member **22***g* is open and flow passes downwardly from the chamber **13** after being heated by burner **8** through the bed **12***a* in its movement to the outlet duct, heat is restored to the bed thereby raising the temperatures to the predetermined desired levels.

Incineration efficiency decreases in relation to the amount of entrapped gases remaining in a bed at the time of flow reversal, such gases not being elevated to proper incineration temperature. Thus, it is important to move these gases into chamber **13** for eventual flow to the outlet duct **6** so as to increase incineration efficiency although at the expense of thermal efficiency. In order to accomplish "purging" of the beds, each of the communication ducts **19** adjacent its end in the inlet duct **5** has a downwardly extending tube **30** communicating between the interior thereof and the ambient. The tubes **30** extending downwardly terminate with their ends in a plane at an angle to the vertical as shown in FIG. **3** so that, normally, closure cap **31** hinged to the top of the tube **30** at the tube end would, by force of gravity and/or flow-sensing, keep the tube **30** open to ambient air. As stated previously, each communication duct **19** has open ends governed by closure members **22** in both the inlet and outlet ducts **5** and **6**, respectively, the opening of the ends being by cam operation. In order to have the exhaust gas flow of an industrial system move through the unit or units **1**, both of the ends of any one communication duct **19**, as stated previously, may never be open at the same time since such a condition would permit the gas flow to move from the inlet duct to the outlet duct through the communication duct without passing through the beds of particulate material. However, three conditions may exist with respect to the ends of any one communication duct and still permit continuous operation of the system: both ends may be closed by members **22**; and either of the ends may be open with the other closed. These three conditions are now explored with respect to a communication duct **19** and its tube **30** on the inlet side.

With the inlet side communication duct end open and the outlet side communication duct end closed, the tube **30** will be open to ambient but, because of a lack of a significant pressure differential, very little ambient air will pass therethrough into the duct **19**. With both communication duct ends closed, maximum ambient moves into duct **19** because of the significant negative static pressure therein and in chamber **13**. The ambient air movement pushes the gas flow remaining in the bed of particulate material associated with the duct **19** and the gas remaining in duct **19** into chamber **13** thereby purging the bed. With the inlet communication duct end closed and the outlet communication duct end open, the substantial negative pressure within the duct **19** is sufficient to close the mouth of the tube **30** by cap **31** in opposition to the force of gravity thereon. In the latter condition, there is no incoming ambient air so that no interference with the flow patterns and pressure maintenance of the flow patterns in the unit occur, and there is a volumetric savings in the discharge fan flow.

Since temperature and flow conditions have been referred to above in generalities, the following specifics should be construed as exemplary of only one set of operating conditions and need be modified to suit the requirements of incineration of the specific gas flow constituents as well as other variables introduced by a change of inputs. The exhaust gas flow from an industrial dryer might be at a temperature of approximately 230° F. and introduced to the inlet duct **5** at a flow rate of approximately 3,900 c.f.m. after passing through the blower chamber **16**. The beds of particulate material are initially heated by the gas or oil burner **8** to achieve an average temperature gradient of approximately 33° F. per inch depth working from a low temperature adjacent the expanded metal flooring to a temperature at approximately 1,600° F. adjacent the chamber **13**. Once in steady state operation, the burner need only add sufficient heat (between 6 to 12 million B.t.u.'s per hour) to provide for insulation radiation and conduction losses and gross thermal inefficiencies of burning or heat exchange. Thus, the pollutant constituents of the exhaust gas flow from the dryer will be incinerated, i.e., reach their autoignition temperature, at different depth levels of the bed with some incineration occurring in the chamber **13** depending on the constituent oxidation characteristic. Since the inlet flow is at approximately 230° F., the bed of particulate material of approximately 3 feet in depth in the flue which receives the inlet gas flow is cooled as the flow passes therethrough to the chamber **13**. Since the characteristic bed temperature for the particular exhaust gas flow from the dryer is requisite to proper incineration of the pollutant constituents in the flow, the packed bed must be restored to the proper temperature in order to efficiently perform. This is accomplished, as stated previously, by the sequential openings of inlet and outlet closure members **22** so that the flow between the inlet and outlet ducts passes adjacent the oil or gas burner in chamber **13**. Under the latter condition, the gas flow in chamber **13** is heated to approximately 1,600° F. so that in passing downwardly through a bed previously cooled, heat energy is returned to the bed and the desired temperatures restored. Because of the heat exchange in restoring the bed to elevated temperatures, the outlet air flow may discharge at a temperature between 300° and 500° F.

To prevent outward leakage of unincinerated gases and hotspots in the casing, it is generally preferably to maintain the static pressure in the chamber **13** slightly below ambient and, in order to accomplish this, the capacity of the exhaust blower is controlled, Control for the latter purpose may be accomplished by means of a pressure sensor within the outlet duct **6**, which senses pressure changes therein and signals the pressure condition change to the blower unit. Thus, when the pressure in the outlet duct rises, the capacity of the outlet blower is automatically increased to maintain the slight negative pressure in the chamber **13** and when the pressure in the outlet duct falls, the capacity of the outlet blower is automatically reduced.

After substantial performance of the air purification system, solids carried by the exhaust gas flow from an industrial system may become trapped on the upstream sides of beds adjacent the flooring, thereby increasing resistance to flow and decreasing incineration efficiency due to partial decomposition and entrainment of the existing flow. In order to reduce the flow-resistance to normal, a "burn-out" phase of the system is initiated. This phase may relate to any one bed of particulate material of any unit or to an entire unit of a modular construction, and, in each instance, flow continues through the remainder of the system. The "burn-out" phase is accomplished by the complete or partial closing off of the inlet and outlet dampers **51** and **53**, respectively, of the communicating duct **19**, associated with the bed to be "burned-out," as shown in FIG. **3**. These dampers may respectively be operated manually by control knobs **50** and **52** but could also be automatically controlled under conventional control principles in response to a time function, bed characteristic or other. With any one duct **19** or all the ducts **19** of a unit of multiple-unit system closed to flow by dampers **51** and **53**—even though the closure members **22** in the inlet and outlet ducts may be open—the packed bed of particulate material is heated to suitably high temperature by the constant reception of heat energy by radiation, convection and conduction from the oil or gas burner without subsequent reduction by movement of cooler inlet flow. As the high temperatures, usually between 800° and 1,200° F., are reached throughout the bed depth, the solids trapped in the upstream part of the bed are carbonized or "burned-out" into gaseous products. In order to remove the carbonized or "burned-out" gaseous constituents, a feedback duct or duct means **54** may be incorporated communicating between respective ducts **19** and the inlet duct **5**. The feedback duct **54** has flow manually or automatically controlled under conventional principles by a damper **55** which permits desired flow of the carbonized constituents back through the entire system as they are received in the inlet duct **5**. With dampers **51** and **53** closing the duct **19**, the damper **55** controls the flow from chamber **13** through the bed being "-burned-out" so that it is sufficient to carry the carbonized constituents to the inlet duct for recycling. With this "burn-out" phase instituted randomly or sequentially with respect to the beds of respective flues of the unit or units, proper flow conditions including bed flow resistance may be maintained.

As shown in dotted lines in FIG. **1**, a bypass duct **40** may be incorporated in the system to permit return of the gas flow from the outlet duct **6** to the inlet **5** for recycling through the system. Such bypass duct may be manually and/or automatically controlled by conventional means as, e.g., dampers, in the duct so that at predetermined timed intervals the outlet flow, especially where incineration efficiency is below normal or low flow conditions prevail, may be recycled for improved results.

A second embodiment of the present invention is shown in FIG. **4**. This figure shows an inverted modular unit **60** comprising an enclosure wherein the need for a grill or expanded metal flooring to support the packed bed of particulate material is made unnecessary. The inverted unit generally designated at **60** comprises an outer wall **72** preferably made of a ceramic or firebrick material and has a centrally located portion **70** which supports a burner **65** and defines a chamber generally designated at **64**, similar to the chamber **13** shown in the embodiment of FIG. **2**. The sidewalls **71** of the portion **70** extend below the top surface of the outer wall **72** and provide dividers **62** which in conjunction with the divider **62***a* upstanding on the enclosure base form the flues generally designated at **61**. The dividers **62** and their adjacent enclosure outer walls **72** form communication ducts **66** and **67** with inlet and outlet ducts, not shown, extending adjacent each other longitudinally of the enclosure along walls **72** above each of the ducts **66** and **67**. The beds of particulate material generally designated at **63** are of the same type, i.e., ceramic or other material having the same characteristics as stated previously with respect to the beds **12** shown in the embodiment of FIG. **2**, and are supported by the base of the enclosure. Additional benefits of the inverted unit, aside from the lack of need for an expanded metal flooring, are cooler sidewalls, lower construction costs, and the facilitation of access for entry for purposes of inspection, servicing, maintenance and repair of valves, the upstream packing etc., since access ports may be provided along the outer walls **72** of the enclosure adjacent the beds **63**. In following the preferred embodiment, FIG. **4** should be viewed in transverse section with pairs of flues **61** and ducts **66** and **67** segregated longitudinally by transverse dividers **73** to provide parallel flue sets and related communication ducts. Cam actuated or other timed actuator equipped flow control means, and purging and "burning-out" phases may be adapted to the inverted unit in analogous fashion to the preferred embodiment.

Each unit, pursuant to the construction hereinabove set forth, may very readily be augmented to provide additional capacity under a modular concept. Thus, additional units juxtaposed with proper conventional sealing of adjacent respec-

tive inlet and outlet duct ends and with sufficient supporting and reinforcing structural members may be associated with each other to increase capacity. Of course, variables such as flow rates, may need change in accordance with the increased capacity. With the propensity of each unit for addition, the capacity of incineration may be modified at any time to accommodate increases in the capacity of the industrial system and its related exhaust gas flow.

Finally, constructional safety requirements necessitate a minimum continuous flow such as is accomplished by the present invention even when certain of the flues are experiencing a burn-out phase or purging.

Since the preferred embodiment may be modified as shown in the embodiment of FIG. 4, and also, for example, by employing a cylindrical enclosure configuration with flues being defined by radially extending dividers, by utilizing a plurality of side oil or gas burners or combinations thereof rather than a single, top and centrally located burner with predetermined adjustment of the sequence of openings of the closure members 22 to provide proper heat energy restoration of the beds, the preferred embodiment should be viewed as illustrative and not in a limiting sense.

What we claim as new is:

1. Apparatus for continuous, thermal regenerative processing of a gas flow comprising an enclosure formed by a plurality of walls and having at least two internal, parallel dividers defining with certain of said plurality of walls at least three laterally spaced flues therein, heat exchange means in said at least three flues, inlet and outlet conduits means, passage means communicating with each of said at least three flues and said inlet and outlet conduit means to provide flow communication between said inlet and outlet conduit means and said at least three flues, said dividers being spaced from one of said plurality of walls and defining with said wall a chamber within said enclosure in common flow communication with said at least three flues, heating means positioned within said chamber, valve means position adjacent the communication of said passage means with said inlet conduit means and said outlet conduit means to govern flow in said passage means, and means connected to said valve means for controlling actuation of said valve means, said flow passing from said inlet conduit means through said passage means and one of said at least three flues into said chamber across said heating means and exiting from said chamber to said outlet conduit means through another flue and passage means.

2. The apparatus set forth in claim 1 wherein a plurality of enclosures are juxtaposed and joined together by structural means, and adjacent ends of the inlet conduit means of respective enclosures are joined in flow communicative relation and the adjacent ends of the outlet conduit means of the enclosures are joined in flow communicative relationship to form common inlet and outlet conduit means.

3. The apparatus set forth in claim 1 wherein said apparatus includes means for intermittently reducing flow into and out of any of said flues, said heating means is adapted to elevate the temperature of said heat exchange means, and said flow reducing means in conjunction with said heating means burn out material trapped in said heat exchange means by heating said heat exchange means in said any flue while reducing flow in said any flue.

4. The apparatus set forth in claim 3 wherein duct means is connected between said any flue and said inlet conduit means, and said duct means includes means for governing flow between said any flue and said inlet conduit means to permit removal of the gaseous products of the burning out of the material trapped in the heat exchange means of said any flue from said heat exchange means.

5. The apparatus set forth in claim 1 wherein each of said passage means has an opening communicating between the interior thereof and ambient, and means for closing said opening to govern the flow of ambient into said passage means through said opening.

6. The apparatus set forth in claim 5 wherein said closing means precludes flow of ambient through said opening only said valve means permits flow between said passage means having said opening and said outlet conduit means.

7. Apparatus for continuous, thermal regenerative processing of gas flow comprising an enclosure having at least three flues therein, heat exchange means in said flues, inlet and outlet conduit means adapted, respectively to transfer flow to be processed and exhaust processed flow, passage means in flow communication with each of said at least three flues and with said inlet and outlet conduit means, a chamber within said enclosure communicating with each of said plurality of flues and containing heating means adapted to elevate the temperature of said heat exchange means, means controlling flow in said passage means, said flow passing from said inlet conduit means through said passage means and one of said at least three flues into said chamber across said heating means and exiting said chamber to said outlet conduit means through another flue and passage means, and said flow controlling means in conjunction with said heating means burning out material trapped in the heat exchange means by heating said heat exchange means while reducing flow therein.

8. The apparatus set forth in claim 7 wherein duct means is connected between each of said passage means and said inlet conduit means, said duct means including means for governing flow between said passage means and said inlet conduit means to permit removal of the gaseous products of the burning out of the material trapped in the heat exchange means from the heat exchange means.

9. Apparatus for continuous, thermal regenerative, processing of gas flow comprising an enclosure having at least three flues therein, heat exchange means in said flues, inlet and outlet conduit means adapted, respectively, to transfer flow to be processed and exhaust processed flow, passage means in flow communication with each of said plurality of flues and with said inlet and outlet conduit means, a chamber within said enclosure communicating with each of said plurality of flues and containing heating means, means for controlling gas flow in said passage means, said passage means having an opening communicating between the interior thereof and ambient means for closing said opening to govern the flow of ambient into said passage means, said flow passing from said inlet conduit means through said passage means and one of said at least three flues into said chamber across said heating means and exiting said chamber to said outlet conduit means through another flue and passage means, and said closing means precluding flow of ambient through said opening only when said gas flow controlling means permits flow between said passage means having said opening and said outlet conduit means.

10. A process for continuous, thermal regenerative, gas purification in apparatus comprising an enclosure having heating means and at least three flues with heat exchange means therein, inlet and outlet conduit means, passage means in flow communication with each of said at least three flues and said inlet and outlet conduit means, and means for controlling flow in said passage means, comprising the steps of reducing the flow only in the passage means communicating with a flue having heat exchange means experiencing increased flow resistance due to trapped material therein carried by the flow, heating the heat exchange means of said flue communicating with said passage means at reduced flow to an elevated temperature, and removing the gaseous products of the burning out of said trapped material from said heat exchange means.

11. The process set forth in claim 10 further comprising the steps of connecting duct means between said passage means and said inlet conduit means, controlling flow in said duct means and permitting return of the gaseous products upon removal from said heat exchange means to said inlet conduit means through said duct means.

12. A process for continuous, thermal regenerative, gas purification in apparatus comprising an enclosure having at least three flues with heat exchange means therein, inlet and outlet

conduit means, passage means in flow communication with each of said at least three flues and said inlet and outlet conduit means, and means for controlling gas flow in said passage means, comprising the steps of normally maintaining the passage means open to ambient flow, purging the passage means and heat exchange means in flow communication with said passage means of entrapped gases with ambient flow into said passage means and said heat exchange means only when

said controlling means precludes gas flow between said passage means and said inlet conduit means and said passage means and said outlet conduit means, and closing said passage means to ambient flow only when said controlling means permits gas flow between said passage means and said outlet conduit means.

* * * * *