United States Patent

[11] **3,588,198**

[72] Inventors **Edward C. Stewart;**
Florian A. Walter, both of Aurora, Ill.

[21] Appl. No. **850,590**
[22] Filed **Aug. 15, 1969**
[45] Patented **June 28, 1971**

[73] Assignee **Lyon Metal Products, Incorporated**
Aurora, Ill.

---

[54] **SUSPENSION SYSTEM FOR FILING CABINET**

11 Claims, 23 Drawing Figs.

[52] **U.S. Cl.** **308/3.8,** 312/339
[51] **Int. Cl.** **F16c 21/00**
[50] **Field of Search** ..... 308/3.8, 338 (X), 339, 348 (X); 312/338 (X), 339, 348 (X)

[56] **References Cited**

UNITED STATES PATENTS

1,582,556	4/1926	Stuck	312/339
2,614,022	10/1952	Kurtzon	312/348
3,389,949	5/1968	Studinski	312/339

Primary Examiner—Martin P Schwadron
Assistant Examiner—R. H. Lazarus
Attorney—Prangley, Clayton, Mullin, Dithmar & Vogel

ABSTRACT: There is disclosed a drawer suspension system for mounting a drawer in a cabinet case for movement inwardly and outwardly. The drawer suspension system comprises a case rail, a drawer rail and an intermediate rail or neutral member. The case rail is secured to the cabinet case. The drawer is provided with drawer clips on each side of the drawer and adjacent the front and rear ends of the drawer for detachably mounting the drawer on the drawer rail. Antifriction members, such as ball bearings, are disposed between the case rail and an intermediate rail or neutral member and between the neutral member and the drawer rail. A lock bracket is mounted on the rear end of each case rail and includes a flange which overlies the adjacent one of the drawer clips at the rear of the drawer when the drawer is in the fully closed position. Stop arms and resilient cushions limit the inward and outward movement of the several rails relative to each other and the stop arms, the resilient cushions and buffer material prevent damage to various parts of the suspension system.

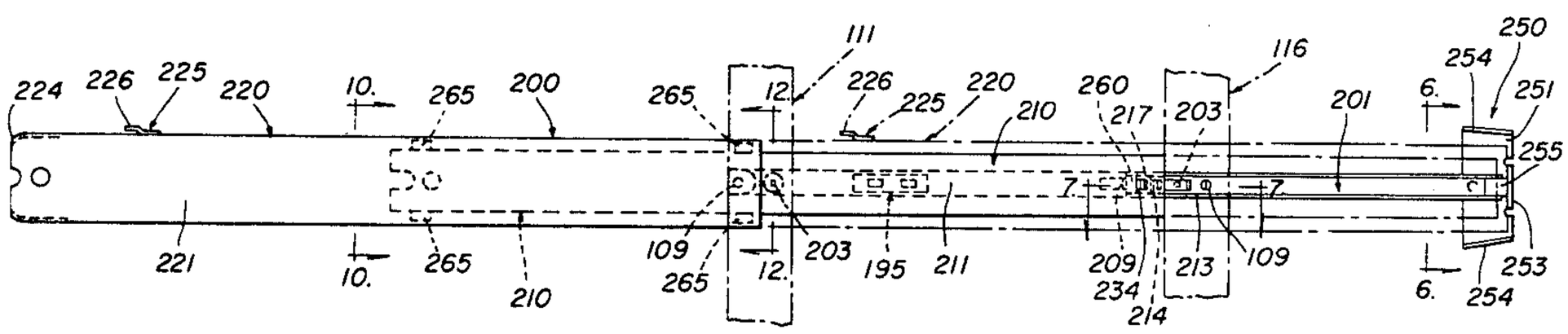

FIG. 1

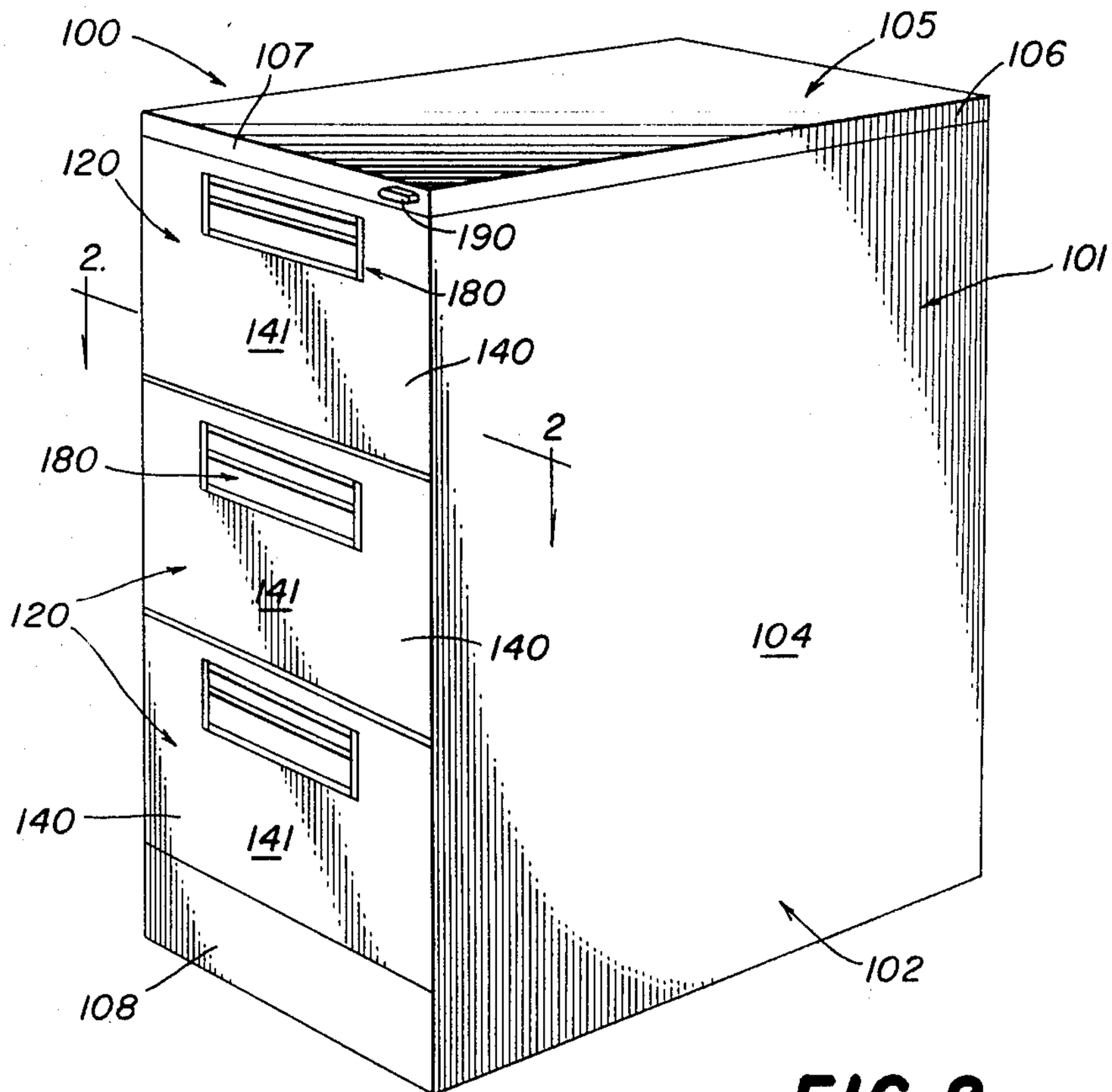

FIG. 2

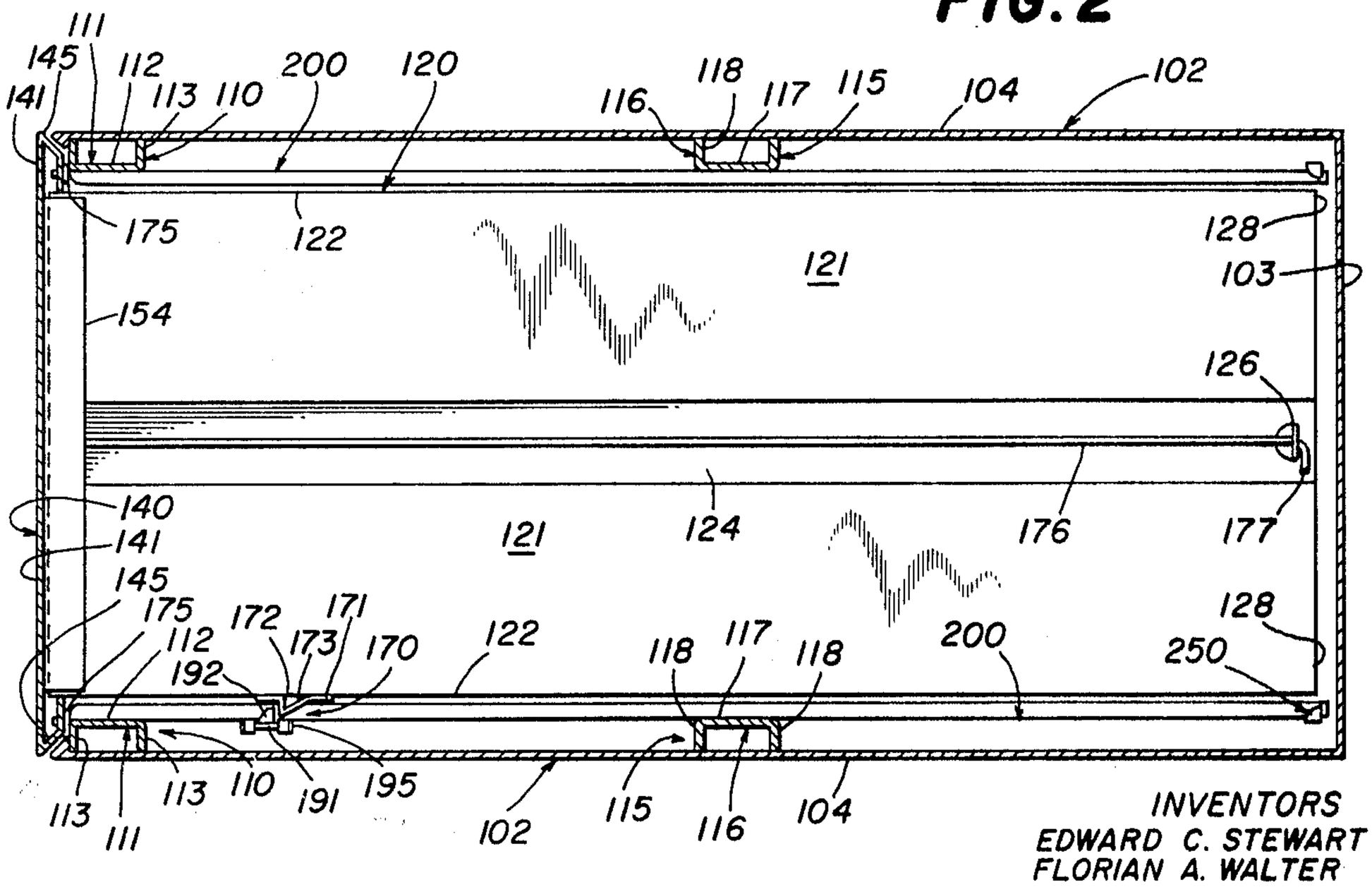

INVENTORS
EDWARD C. STEWART
FLORIAN A. WALTER

BY
Pringley, Clayton, Mullin,
Dithmar & Vogel
ATTYS.

FIG. 3

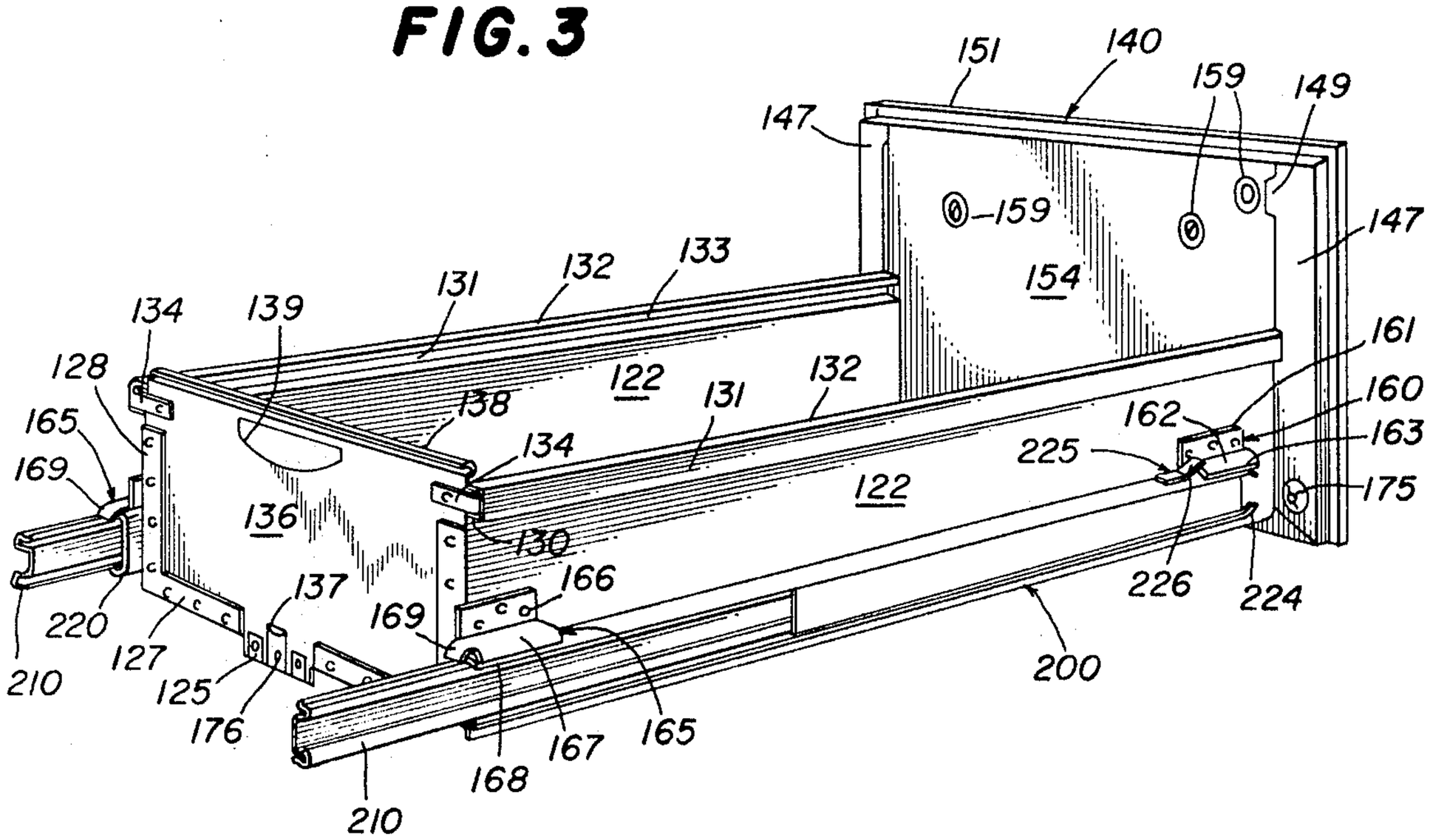
151
140
159
149
147
159
147
154
131
132
133
134
139
161
128
122
138
131
132
160
162
165
134
163
225
169
122
175
136
130
166
137
220
169
226
224
127
125
176
167
165
210
168
200
210

FIG. 4

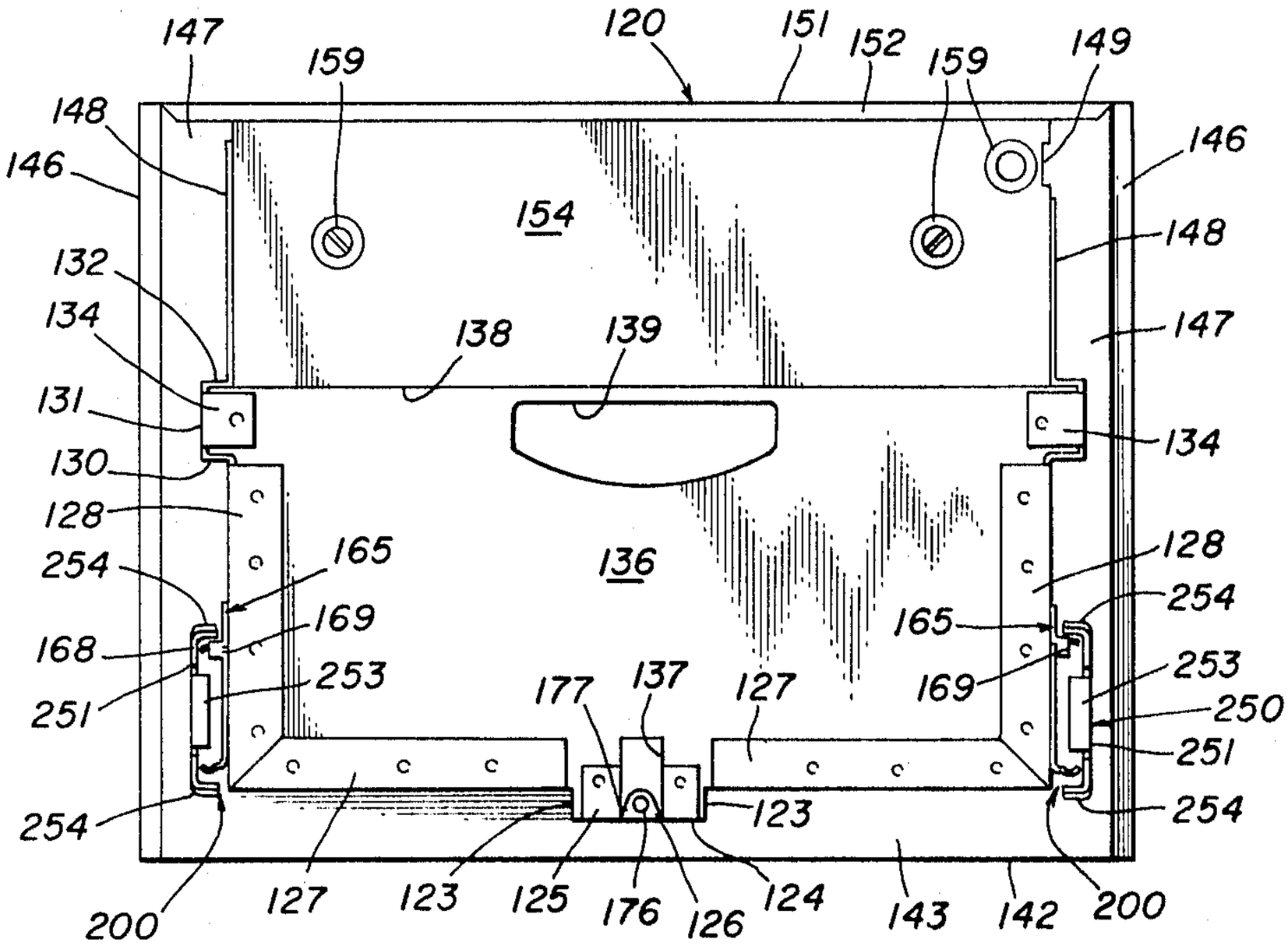
147
159
120
151
152
159
149
148
146
146
154
132
148
134
138
139
147
131
134
130
128
165
254
169
168
253
251
177
137
127
123
254
200
127
123
125
176
126
124
143
142
200

FIG. 5

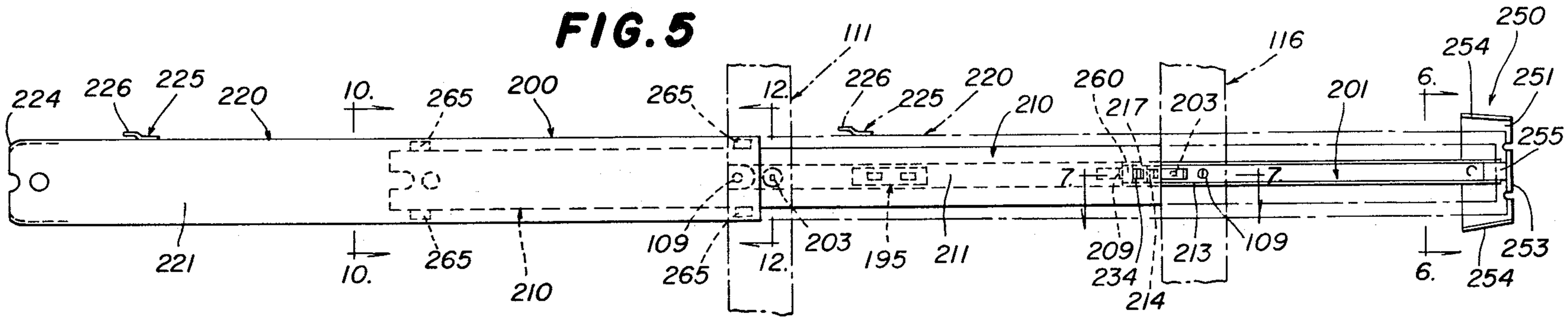

FIG. 6

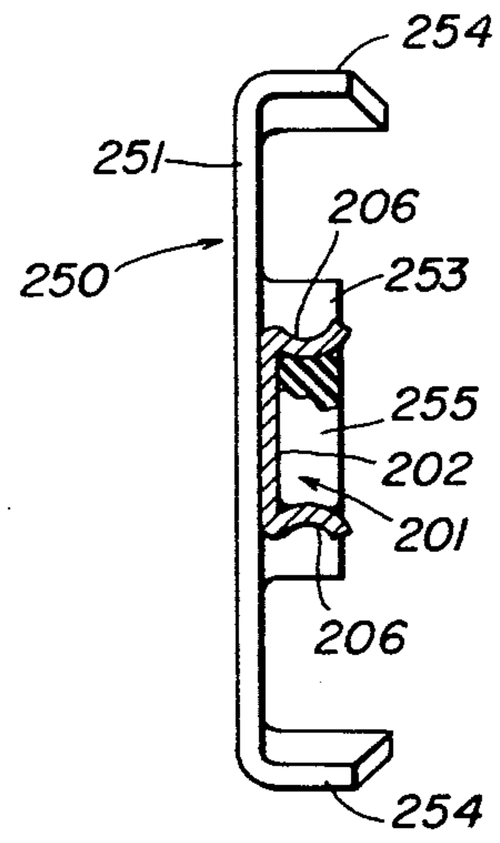

FIG. 7

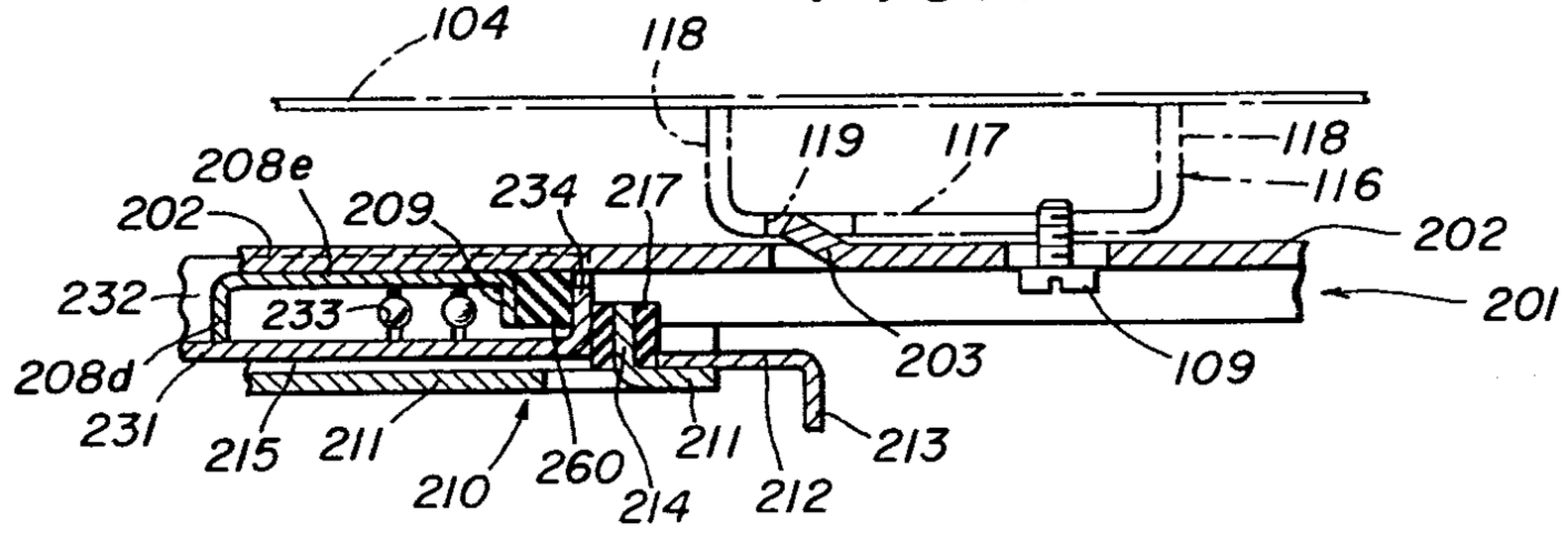

FIG. 8

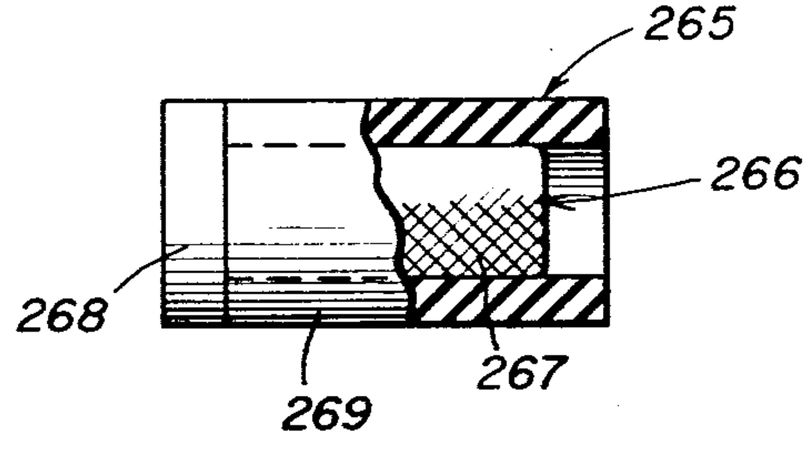

FIG. 9

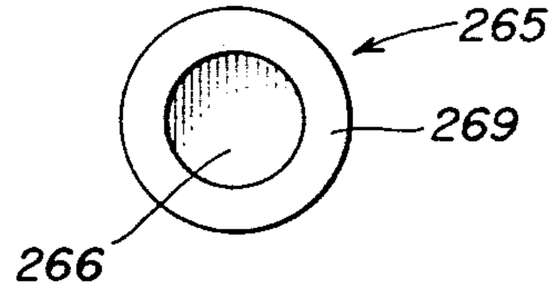

FIG. 10

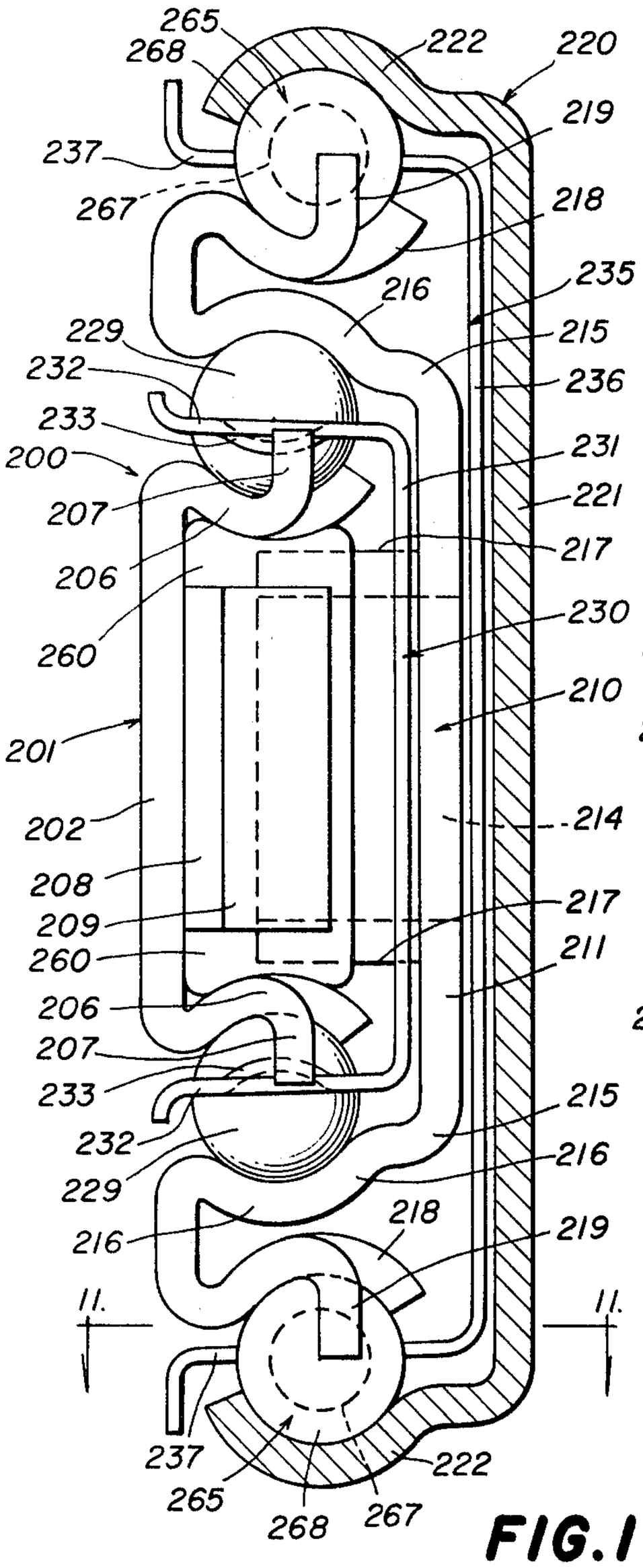

FIG. 12

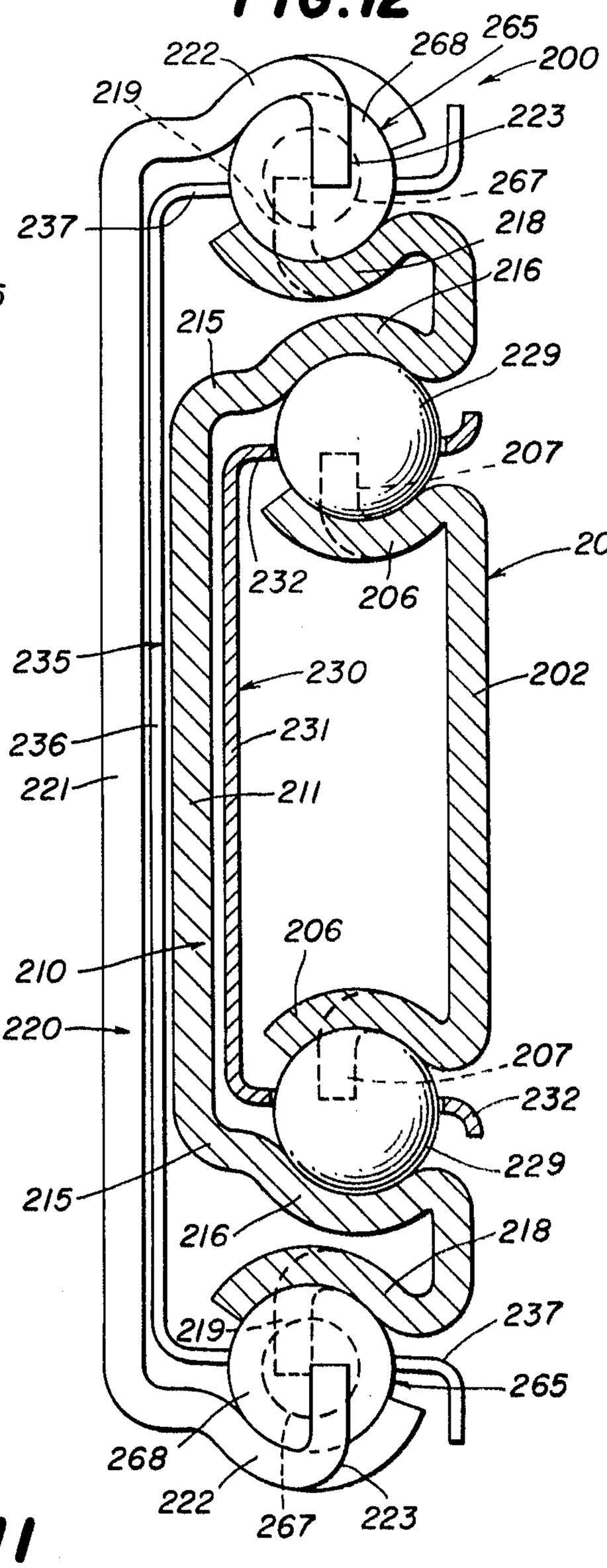

FIG. 11

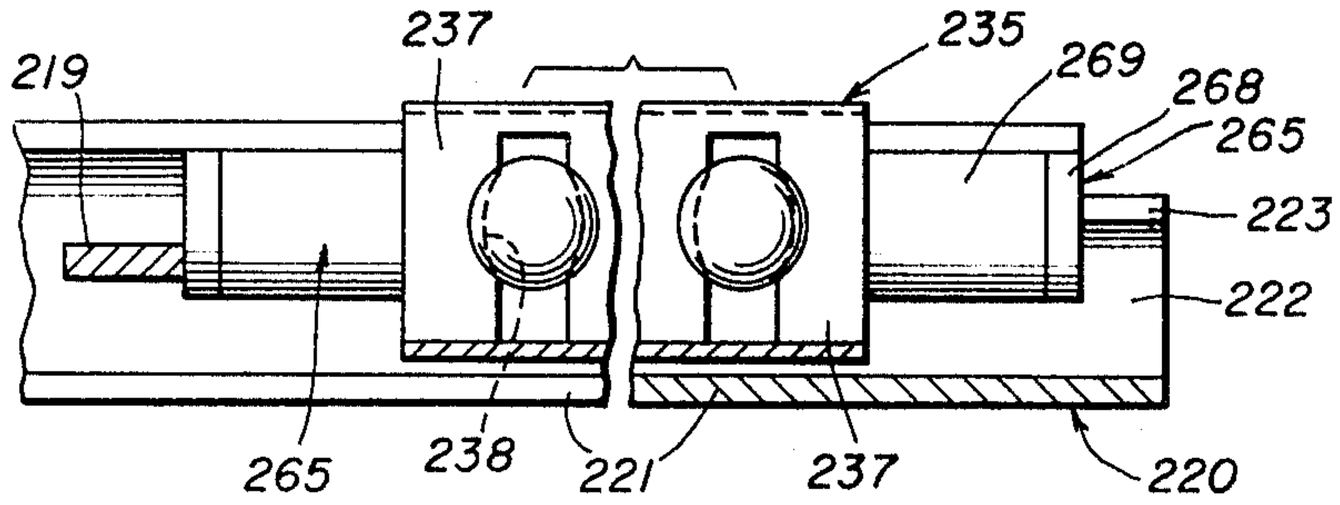

FIG. 16

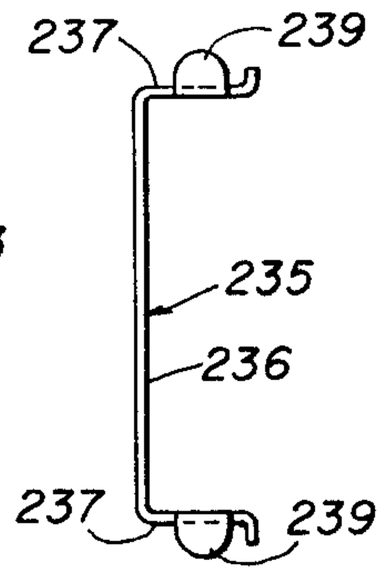

FIG. 13

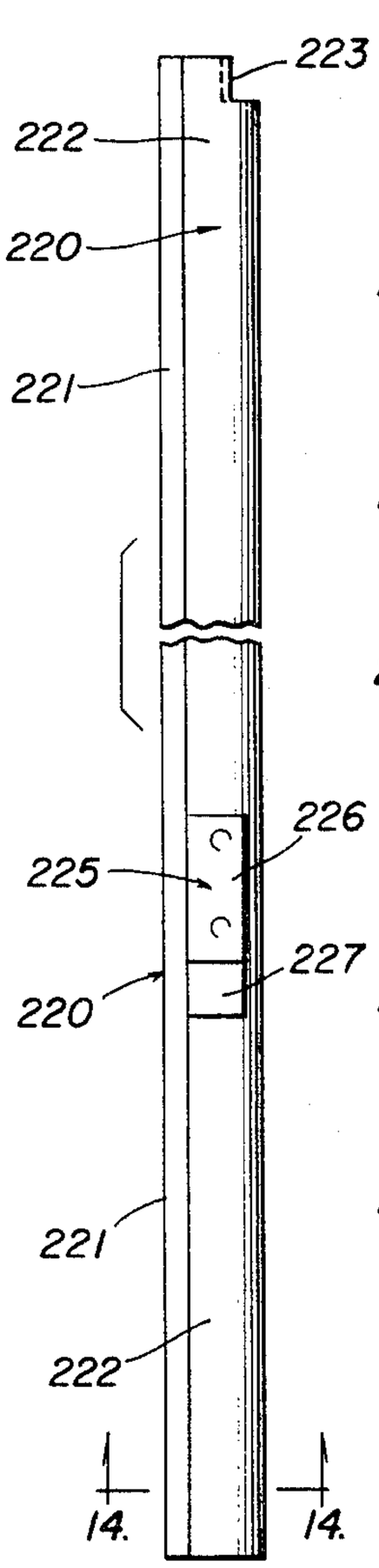

FIG. 15

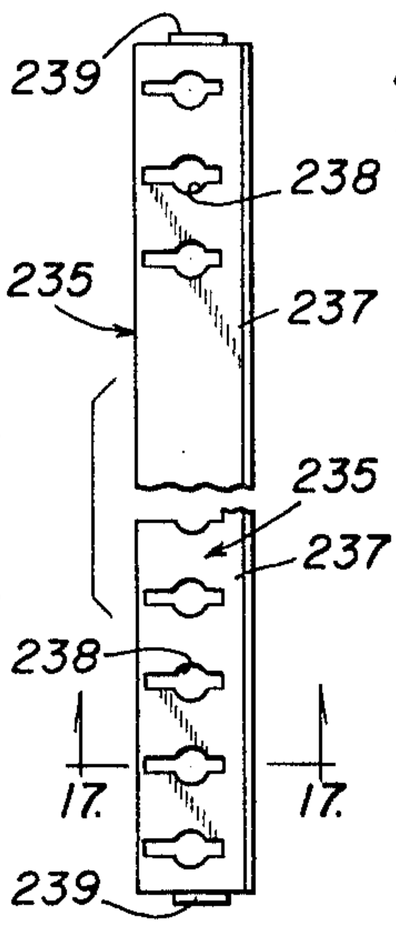

FIG. 18

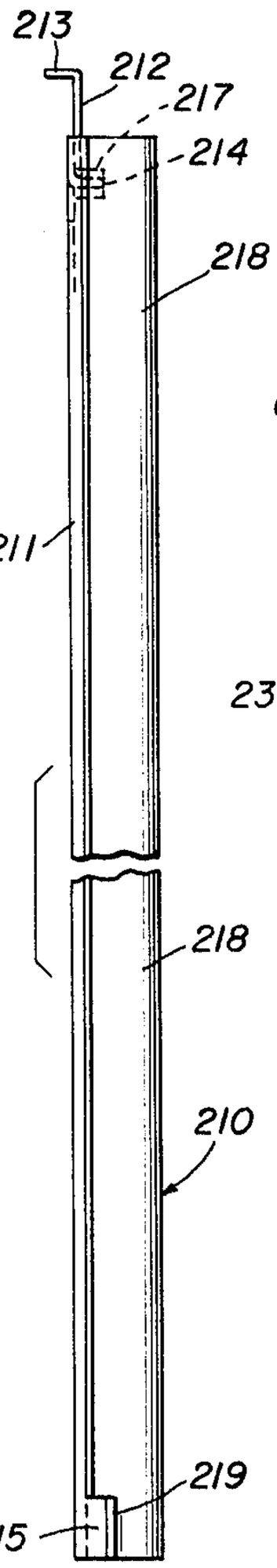

FIG. 22

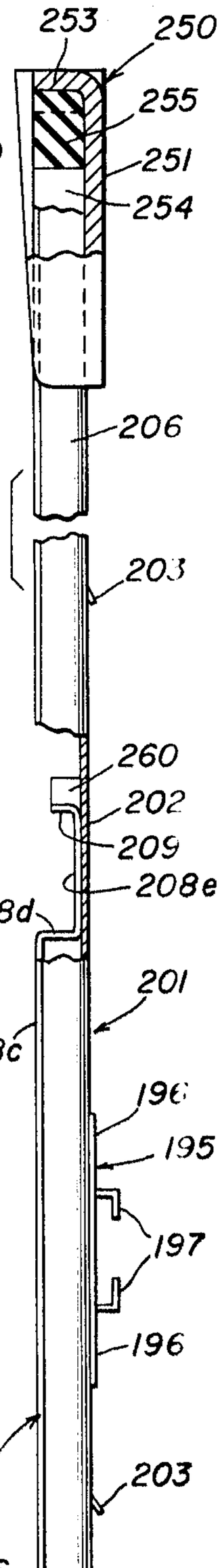

FIG. 20

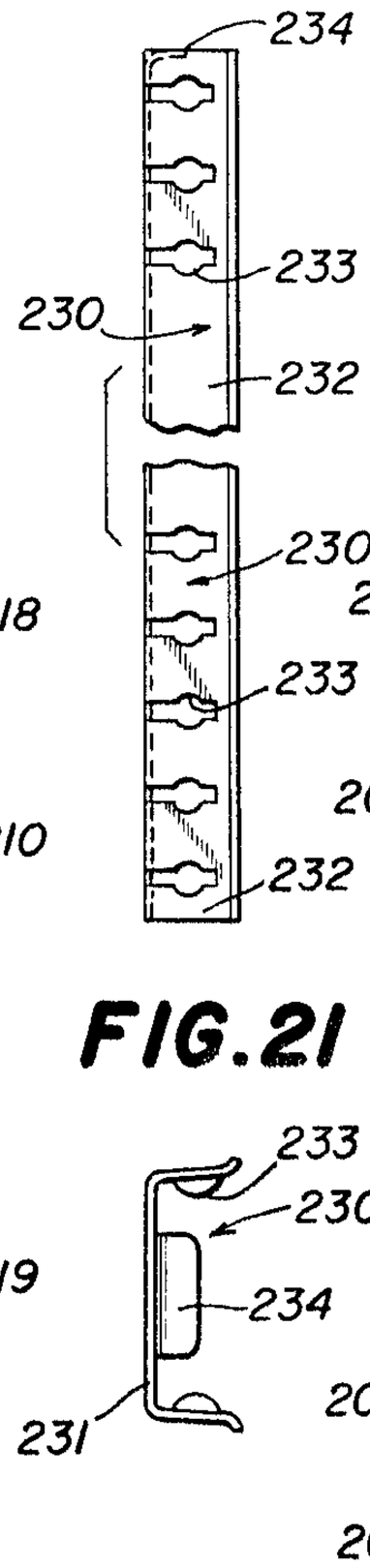

FIG. 17

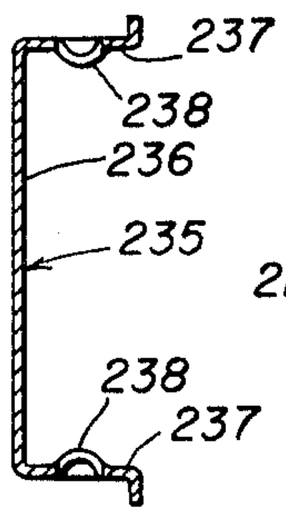

FIG. 21

FIG. 14

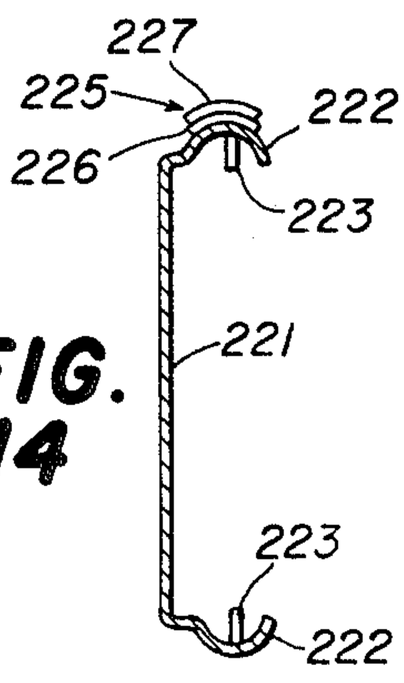

FIG. 19

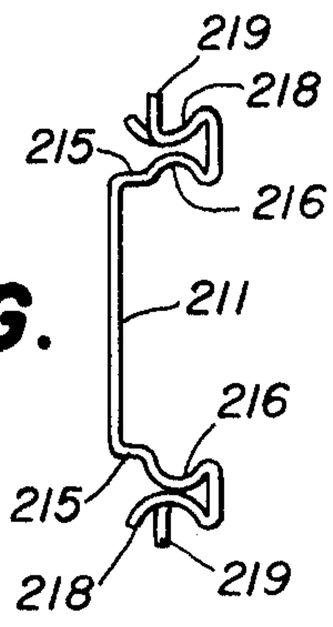

FIG. 23

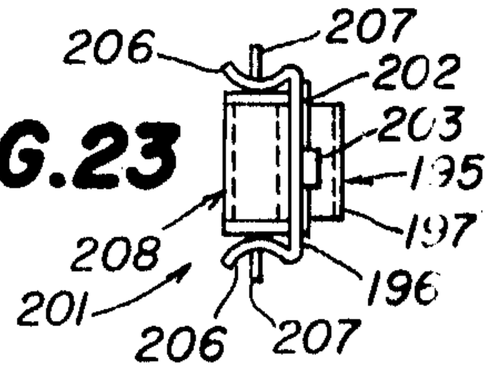

SUSPENSION SYSTEM FOR FILING CABINET

The present invention relates to a drawer suspension system for mounting drawers in file cabinets and the like.

The drawer suspension system of the present invention is of general utility and is useful for mounting drawers in a wide variety of types of furniture but certain of the advantages are more fully realized when the drawer suspension system is incorporated in a file cabinet, and accordingly, the invention will be so described.

It is a general object of the invention to provide an improved file cabinet incorporating therein an improved drawer suspension system, the various parts of the drawer suspension system being essentially formed of sheet metal and being simple in construction and economical in manufacture.

Another object of the invention is to provide a drawer suspension structure for mounting a drawer having pairs of drawer clips on the opposite sides thereof within a case for movement inwardly and outwardly with respect thereto, the suspension structure comprising a case rail carrying on the upper and lower edges thereof first inner ball races, a first stop arm mounted intermediate the front and the rear of the case rail between the first inner ball races and directed inwardly from the case rail, means for mounting the case rail upon an associated case, a neutral member disposed about the case rail and carrying on the upper and lower edges thereof the outer ball races respectively and second inner ball races integral with the neutral member and disposed outwardly with respect to the first outer ball races, a drawer suspension rail overlying the neutral member and carrying on the upper and lower edges thereof second outer ball races, a first ball cage carrying a first pair of inner sets of balls disposed between the first inner ball races and an adjacent one of the outer ball races, a second stop arm mounted on the rear of the first ball cage and directed outwardly therefrom, a second ball cage carrying a second pair of outer sets of balls disposed between the second inner ball races and the adjacent one of the second outer ball races, and a third stop arm mounted on the rear of the neutral member and directed outwardly therefrom, the third stop arm cooperating with the first stop arm in the fully extended position of the suspension structure to hold the second stop arm therebetween and to prevent the lagging of the first ball cage during movement thereof to the fully extended position of the suspension structure.

A further object of the present invention is to provide a drawer suspension structure for mounting a drawer having pairs of drawer clips on the opposite sides thereof within a case for movement inwardly and outwardly with respect thereto, the suspension structure comprising a case rail carrying on the upper and lower edges thereof first inner ball races, means for mounting the case rail upon an associated case, a neutral member disposed about the case rail and carrying on the upper and lower edges thereof first outer ball races respectively and second inner ball races integral with the neutral member and disposed outwardly with respect to the first outer ball races, a drawer suspension rail overlying the neutral member and carrying on the upper and lower edges thereof second outer ball races, a resilient cushion mounted on the rear of the case rail between the first inner ball races, and a stop arm mounted on the rear of the neutral member and directed outwardly therefrom to engage the resilient cushion mounted on the rear of the case rail to prevent continued rearward movement of the neutral member in the telescoped position thereof independently of the case rail member.

Another object of the present invention is to provide a drawer suspension structure for mounting a drawer having pairs of drawer clips on the opposite sides thereof within a case for movement inwardly and outwardly with respect thereto, the suspension structure comprising a case rail carrying on the upper and lower edges thereof first inner ball races, means for mounting the case rail upon an associated case, a neutral member disposed about the case rail and carrying on the upper and lower edges thereof first outer ball races respectively and second inner ball races integral with the neutral member and disposed outwardly with respect to the first outer

ball races, a drawer suspension rall overlying the neutral member and carrying on the upper and lower edges thereof second outer ball races, a first pair of tangs on the forward end of the neutral member extending outwardly to close the forward end of the second inner ball races, a second pair of tangs on the rear end of the drawer rail extending inwardly to close the rear end of the second ball races, and blocks of buffer material disposed between the second inner ball races and the adjacent one of the second outer ball races and disposed between cooperating pairs of the first and second tangs, the blocks of buffer material having an outer surface of resilient material.

The invention, both as to its organization and method of operation, together with further objects and advantages thereof, will best be understood by reference to the following specification taken in connection with the accompanying drawings, in which:

FIG. **1** is a perspective view of a file cabinet incorporating therein a drawer suspension system made in accordance with and embodying the principles of the present invention;

FIG. **2** is a view in horizontal section on an enlarged scale along the line **2–2** in FIG. **1**;

FIG. **3** is a rear perspective view of a file drawer and the associated suspension structure therefor;

FIG. **4** is a view in vertical section of the rear of the drawer in FIG. **3**;

FIG. **5** is a side elevational view of one of the drawer suspension structures, the parts being illustrated in an extended position thereof;

FIG. **6** is a view in vertical section on an enlarge scale along the line **6–6** of FIG. **5**;

FIG. **7** is a fragmentary view in horizontal section on an enlarged scale along the line **7–7** of FIG. **5**;

FIG. **8** is an enlarged side elevational view partly broken away of the block of buffer material;

FIG. **9** is an enlarged end view of the block of buffer material shown in FIG. **8**;

FIG. **10** is a view in vertical section on an enlarged scale along the line **10–10** of FIG. **5**;

FIG. **11** is a view in section on a reduced scale along the line **11–11** of FIG. **10**;

FIG. **12** is a view in vertical section on an enlarged scale along the line **12–12** of FIG. **5**;

FIG. **13** is an enlarged side elevational view of the drawer rail of the suspension system;

FIG. **14** is an end elevational view of the drawer rail along the line **14–14** of FIG. **13**.

FIG. **15** is a fragmentary side elevational view of the outer ball cage of the suspension system;

FIG. **16** is an end elevational view of the ball cage of FIG. **15**;

FIG. **17** is a view in section along the line **17–17** of FIG. **15**;

FIG. **18** is a fragmentary side elevational view of the neutral member of the suspension system;

FIG. **19** is an end elevational view of the neutral member of FIG. **18**;

FIG. **20** is a fragmentary side elevational view of the inner ball cage of the suspension system;

FIG. **21** is an end view of the inner ball cage shown in FIG. **20**;

FIG. **22** is a fragmentary side elevational vie with certain parts broken away of the right-hand case rail of the suspension system; and

FIG. **23** is an end view of the case rail of FIG. **22**.

Referring now to the drawings, and particularly to FIGS. **1** to **4** thereof, there is illustrated a file cabinet **100** incorporating therein a drawer suspension structure of the present invention, a three-drawer file cabinet having been shown for purposes of illustration. The file cabinet **100** comprises a case **101** including a body **102** having a substantially rectangular rear wall **103** and a pair of substantially rectangular sidewalls **104** extending forwardly therefrom and disposed substantially perpendicular thereto and parallel to each other. The upper end

of the body 102 carries thereon a top 105 having side flanges 106 overlying the upper ends of the sidewalls 104 and having a front flange 107 overlying the upper front portion of the body 102. Closing the lower portion of the front opening in the body 102 is a base 108.

Disposed in the forward portion of the case 102 is a front frame 110 (see FIG. 2) including a pair of vertically arranged U-shaped channels 111, each U-shaped channel 111 including a main wall 112 and a pair of side flanges 113. The channels 111 extend substantially the entire height of the cabinet 100 and are joined at intermediate portions thereof by cross braces (not shown). Also disposed within the case 101 and between the sidewalls 104 intermediate the front and rear edges thereof is a center support 115, the center support 115 including a pair of upstanding U-shaped center channels 116 each including a main wall 117 and a pair of vertically and outwardly extending side flanges 118. There preferably are provided braces (not shown) between the center supports 115 to hold them in the proper position. It will be understood that the front frame 110 and the center support 115 are suitably secured to the body 102 such as by welding to complete the file cabinet case 101.

Disposed in the drawer-receiving opening provided about the front frame 110 are three file drawers 120. Each of the file drawers 120 includes a bottom wall 121 that is generally rectangular in shape and has a width slightly less than the inner width of the cabinet case 101 and a length slightly less than that of the cabinet case 101, the longitudinally extending inner edges of the bottom wall 121 carrying sidewalls 122 integral therewith and extending upwardly therefrom substantially normal thereto and substantially parallel to each other. Provided centrally in the bottom wall 121 is an index rod recess comprising a pair of downwardly directed flanges 123 joined at the bottom by a lower wall 124, a pair of upstanding rear index flanges 125 being provided as well as an index rod tab 126, all disposed substantially normal to the lower wall 124 for holding the rear end of the index rod.

There further are provided rear bottom flanges 127 and rear side flanges 128 disposed substantially normal respectively to the bottom wall 121 and the sidewalls 122. The upper edges of the sidewalls 122 carry thereon outwardly directed holding flanges 130 that in turn carry on the outer edges thereof upstanding flanges 131 which in turn carry on the upper edges thereof an inwardly directed top flange 132 carrying on the inner edge thereof a dependent retaining flange 133. The rear end of the upstanding flanges 131 also carry inwardly directed flanges 134. The rear of the drawer 120 is closed by a rear wall 136 which is suitably secured as by welding to the various flanges 125, 127, 128 and 134 substantially to close all the space at the rear of the drawer 120 below the top flanges 132, the exception being a slot 137 in the lower end thereof above the index rod tab 126. The upper edge of the rear wall 136 carries a forwardly directed U-shaped top flange 138 and disposed immediately therebelow and centrally of the rear wall 136 is an opening 139 to receive the hand of the user therethrough for manipulating the drawer 120 as will be described more fully hereinafter.

The forward end of the drawer 120 is closed by a drawer head 140 that includes an outer wall that is essentially rectangular in shape, the lower end of the front wall 141 extending below the bottom wall 121 an the lower wall 124 and having on the lower edge thereof a rearwardly directed flange on the rear edge of which is an upturned flange 143 extending upwardly to the underside of the bottom wall 121 and carrying a rearwardly directed attachment flange (not shown) which is suitably secured to the bottom portion of the section 121 as by welding. Formed on the side edges of the outer front wall 141 are side flanges 145 that are directed rearwardly and carry on the rear edges thereof rearwardly and inwardly directed flanges 146, the inner edges of the flanges 146 carrying an inwardly directed back flange 147 thereon, the back flange 147 carrying rearwardly directed side attachment flanges 148 and inwardly directed holding tabs 149 thereon. The upper end of the outer front wall 141 carries a rearwardly and slightly downwardly directed top flange 151 carrying on the rearmost edge thereof a downturned holding flange 152, the front wall 141 and the flanges 151 and 152 cooperating to form a substantially U-shaped retaining portion.

Disposed inwardly and spaced from the outer front wall 141 is an inner front wall 154 having side flanges (not shown) extending forwardly toward the outer front wall 141, a bottom flange (not shown) also extending forwardly toward the outer front wall 141 and a top flange (not shown), the outer edge of the top flange having an upstanding flange (not shown) disposed within the holding flange 152 on the outer front wall 151. It will be seen that the inner front wall 154 substantially closes the space between the drawer sidewalls 122 and closes the rear of the drawer head 140. Finally, there is formed on the inner front wall 154 three inwardly directed embossments 159, two of which have fastener receiving openings therethrough for mounting of the latch structure as will be described more fully hereinafter and one embossment 159 being used for spacing the inner front wall 154 from the latch structure.

Each of the file drawers 120 is mounted within the file cabinet case 101 by means of a pair of drawer suspension structures 200, and in order to mount a drawer 120 upon the suspension structure therefor, as will be explained more fully hereinafter, each of the drawer sidewalls 122 is provided adjacent to the forward end thereof with a drawer clip 160. The clip 160 includes an attachment flange 161 that is suitably secured as by welding to the adjacent drawer sidewall 122, and extending outwardly from the attachment flange 161 and disposed substantially normal thereto is a support flange 162, the support flange 162 carrying on the outer end thereof a downturned retaining flange 163. A rear drawer clip 165 is also provided on each of the drawer sidewalls 122 adjacent to the rear thereof, the rear clip 165 including an attachment flange 166 secured as by welding to the associated drawer sidewall 122. Extending outwardly from the lower edge of the attachment flange 166 and disposed substantially normal thereto is a support flange 167, the support flange 167 carrying on the outer edge thereof a downturned retaining flange 168. There further is provided on the rear of the support flange 167 a downturned rear flange 169 for engaging the rear end of the associated drawer rail as will be described more fully hereinafter.

Referring to FIG. 2, it will be seen that the right-hand drawer sidewall 122 as viewed from the front of the file cabinet 100 is provided thereon with a drawer stop or catch 170 that is utilized to lock the drawer 120 in the closed position thereof. The drawer catch 170 includes a pair of attachment flanges 171 which are suitably secured as by welding to the associated sidewall 122. Formed integral with the rear end of the forward attachment flange 171 and extending substantially normal thereto laterally from the sidewall 122 is an abutment surface 172 which connects at the outer end thereof with an inwardly directed cam surface 173 that connects with the rear attachment flange 171. In FIG. 3 it will also be seen that each drawer head back flange 147 carries thereon two rubber bumpers 175, one of the bumpers 175 being provided on each of the back flanges 147 on each side of the drawer head, whereby to absorb the shock of the closure of the drawer 120, the bumpers 175 engaging the front frame 110 and particularly the upstanding front channels 111 an specifically the said flanges 113 thereof. The bumpers 175 have yet another purpose with regard to closure of the drawer 120, as will later be explained. Disposed in the bottom of each of the drawers 120 is an index rod 176 that extends substantially the length of the drawer 120, and specifically from the drawer head 140 rearwardly through an opening in the index rod tab 126. The rear end of the rod 176 carries a retainer 177 disposed substantially at right angles to the axis of the rod 176 and extending laterally into the space between the rear wall 136 and the index rod tab 126, whereby to maintain the retainer 177 of the index rod 176 in the operative position thereof.

Each of the file drawers 120 is provided in the drawer head 140 thereof with a combine pull and latch and label holder 180, mechanism (not shown) being provided to latch each of the file drawers 120 in the closed position thereof. There further is provided a lock 190 disposed in the front flange 107 of the top 105 and which through mechanism (not shown) is useful in moving a lock bar 191 (see FIG. 2) between the locking and unlocking positions thereof, the lock bar 191 being provided with a plurality of tangs 192 struck therefrom and adapted to engage the abutment surface 172 on the drawer catch 170 when the lock bar 191 is shifted to a raised or locking position thereof by actuating the lock 190.

Further details of construction of the file cabinet 100 and of the case 101 thereof and the file drawers 120 thereof and the combined pull and latch and label holder 180 and the lock 190 are described in U.S. Pat. No. 3,368,859 filed on Mar. 15, 1966 by Kenneth D. Schreyer and issued on Feb. 13, 1968 for FILE CABINET, the description thereof being incorporated herein by reference.

Each of the drawers 120 is provided with a drawer suspension 200 for each side thereof for mounting of the drawer 120 in the file cabinet case 102, the drawer suspension 200 being more particularly mounted upon the front frame 110 and the center support 115 and receiving the drawer clips 160 and 165 on the associated drawer 120. With the exception of certain minor details which will be printed our hereinafter, the drawer suspension 200 disposed on the opposite sides of each of the drawers 120 are substantially identical, one being the mirror image of the other, and accordingly, like reference numerals have been applied to like parts throughout and only one of the drawer suspensions 200 will be described in detail. Each drawer suspension 200 includes a case rail 201 which extends substantially the entire length of the file case 101, and as may best be seen in FIGS. 22 and 23 includes a main wall 202 that is substantially flat and has struck therefrom a pair of spaced-apart mounting arms 203, the mounting arms 203 being directed forwardly and adapted to engage in substantially rectangular cutouts (not shown) in the front channel 111 and rectangular cutouts 119 in the center channel 116, the arms 203 actually resting upon the lower portions defining the cutouts. There further are provided openings in the main wall 202 to receive therethrough fasteners such as the bolts 109 passing therethrough and engaging threaded openings in the front channel 111 and threaded openings in the center channels 116, shims being provided as required. Formed on the longitudinally extending edges of the main wall 202 are concave part-circular inner ball races 206 that extend substantially the entire length of the main wall 202, ball retaining tangs 207 being provided on the forward ends of both of the inner ball races 206. There further is provided on the inner side of the main wall 202 and between the races 206 and intermediate the ends of the case rail 201, a stiffener 208 welded to the main wall 20 of the case rail 201, the stiffener 208 having a first section 208*a* parallel to the longitudinal axis of the case rail 201, the section 208*a* abutting the main wall 202 and being welded thereto, the stiffener 208 having a second section 208*b* transverse to the section 208*a* and connecting the section 208*a* with the third section 208*c* also being parallel to the longitudinal axis of the case rail 201 but spaced from the main wall 202, the third section 208*c* terminating in a fourth section 208*d* also being a transverse section and connecting the third section 208*c* with a fifth section 208*e*, the fifth section 208*e* parallel to the longitudinal axis of the case rail 201, the section 208*e* abutting the main wall 202 and being welded thereto, the fifth section 208*e* terminating in a transversely extending stop arm 209. The stiffener 208 serves to strengthen the beam strength of the case rail 201, when the case rail 201 is in the fully extended position thereof the main strengthening and reinforcing action coming from the transversely extending sections 208*b* and 208*d*. The stop arm 209 carries thereon a bumper 260 formed of a suitable resilient material such as rubber, the bumper 260 being secured to the stop arm 209.

Disposed about the case rail 201 is a neutral member 210, the details of construction of which are illustrated in FIGS. 18 and 19. The neutral member 210 includes a main wall 211 that is disposed vertically in use and substantially parallel to the main wall 202 but spaced outwardly therefrom. The rear end of the neutral member 210 carries an elongated bracket 212 secured to the main wall 211 such as by welding, the elongated bracket 212 carrying an inwardly directed stop arm 213 adapted only to prevent the unintentional disassembly of the drawer suspension 200 when not in use as will be described more fully hereinafter, to limit the outward movement of the neutral member 210 with respect to the drawer rail. Formed on the rear end of the neutral member 210 is an outwardly directed stop arm 214 having a resilient sleeve 217, which is adapted to cooperate with the bumper 260 on the stop arm 209 carried by the case rail 201 to limit the outward movement of the neutral member 210 with respect to the case rail 201. Formed on the longitudinally extending upper and lower edges of the main wall 211 are laterally and outwardly extending flanges 215 which carry outer ball races 216 to cooperate with the inner ball races 206 on these rail 201. Extending upwardly and downwardly from the outer edges of the outer ball races 216 are outwardly directed inner ball races 218 that extend substantially the entire length of the neutral member 210 and are closed at the forward end thereof by outwardly directed tangs 219.

Disposed about the neutral member 210 and cooperating therewith is a drawer rail 220, the details of construction of which may be best seen in FIGS. 13 and 14. The drawer rail 220 includes a main wall 221 that is disposed substantially vertically in use and spaced outwardly with respect to the main wall 211 of the neutral member 210. The longitudinally extending edges of the main wall 221 carry outer ball races 222 that extend over the inner ball races 218 upon the neutral member 210, tangs 223 being provided at the rear end of the drawer rail 220 to close the rear end of the outer ball race 222, the forward end of the drawer rail 220 being crimped to provide inwardly extending surfaces 224 to close the same for a purpose hereinafter explained. Mounted upon the upper outer race 222 is a drawer bracket 225 including an attachment flange 226 that is suitably secured as by welding to the drawer rail 220 and having formed integral therewith and extending forwardly therefrom a retaining arm 226 adapted to overlie and engage the associated drawer clip.

Disposed between the various sets of inner and outer races are ball bearings 229. A first pair of sets of ball bearings is maintained in the operative position by an inner ball cage 230, see FIG. 20, the inner ball cage 230 including a main wall 231 having a pair of outwardly directed flanges 232 on the upper and lower edges thereof having ball receiving openings 233, the edges of the openings 233 being coined or arcuate, the rear of the inner ball cage 230 being formed into an outwardly directed stop arm 234, the inner ball cage 230 maintaining two sets of ball bearings 229 in the operative position, the one set being disposed between the upper inner ball race 206 and the cooperating outer ball race 216 and the other set being disposed between the lower inner ball race 206 and the cooperating outer lower ball race 216.

A second pair of sets of ball bearings 229 is held in the operative position by an outer ball cage 235 having a main wall 236 carrying outwardly directed flanges 237 thereon having ball receiving openings 238 therein for maintaining the associated ball bearings in the desired operative position, the edges of the openings 238 being coined or arcuate. More specifically, the outer ball cage 235 maintains a first set of ball bearings in position between the upper inner ball races 218 and the cooperating upper outer ball race 222 and a second set of ball bearings in position between the lower inner ball race 218 and the cooperating lower outer ball race 222. There further is provided on each end of the flanges 237 a reversely bent tab 239 providing a smooth outer surface at the end thereof.

There further is provided between the neutral member 210 and the drawer rail 220 four buffers 265, the details of construction of which are illustrated in FIGS. 8 and 9. The buffers

265 each include a metal rivet 266 having a shank portion 267 and a head portion 268, the shank portion 267 being enclosed in a resilient material 269, such as rubber. Two of the buffers 265 being disposed between the upper outer ball race 222 and the upper inner ball race 218 at the ends of the ball cage 235 with the shank portion 267 in the resilient material 269 abutting the tabs 239 in certain positions thereof, and the other tow buffers 265 being disposed between the lower outer ball race 222 and the lower inner ball race 218 and disposed on either side of the outer ball cage 235 to engage the tabs 239 with the shank portion 267 encased in the resilient material 269. Furthermore, when the parts are in the fully extended position, the tangs 219 on the forward end of the neutral member 210 engage the head portion 268 of the associated buffer 265 and push them rearwardly against the front end of the outer ball cage 235 and the rear end of the ball cage 235 pushes the head portion 268 of the rearmost buffer 265 against the rear tangs 223 on the rear end of the drawer rail, thereby to provide a positive stop and protection for the parts in the fully extended position thereof.

There further is provided on the rear end of the case rail 201 a lock bracket 250, the details of construction of which are best seen in FIGS. 5, 6, and 22. As illustrated, the bracket 250 includes a main wall 251 that is disposed substantially vertically and is suitably secured as by welding to the rear end of the main wall 202 of the case rail 201. A stop flange 253 is formed on the rear edge of the main wall 251 and extends in the same direction as the stop arm 213 mounted on the rear of the neutral member 210, the stop flange 253 projecting from the main wall 251 a distance no greater than the extent of the inner ball races 206 of the case rail 201. The main wall 251 extends upwardly and downwardly beyond the upper and lower surfaces of the associated drawer rail 220 and has upper and lower edges that converge rearwardly, these edges carrying retaining flanges 254 directed inwardly and overlying the associated drawer rail 220. The stop flange 253 is further provided with a resilient cushion in the form of a rubber bumper 255 generally rectangular in shape, the rubber bumper 255 being held in the case rail 201 between the ball races 206 thereof and abutting in stop flange 253, the bumper 255 having sidewalls conforming to the shape of the inner ball races 206 and a height no greater than the extend of the ball races 206. Two of the retaining flanges 254 are provided whereby the bracket 250 is symmetrical about a horizontal plane so that the same bracket construction can be used on both the left-hand case rail and the right-hand case rail 201.

It will be understood that in the construction of the file cabinet 100, the drawer suspensions 200 are first mounted upon the front frame 110 and the center support 115 thereof by inserting the mounting arms 203 into the associated openings in the respective front and center channels 111 and 116. To mount the associated drawer 120 upon its drawer suspensions 200, the drawer rails 220 and the parts connected and driven thereby are pulled to the outermost positions thereof with respect to the cabinet case 101. The drawer 120 is then placed in the approximate position over the drawer rails 220 and the drawer clips 160 are lowered upon the drawer rails 220 until they are resting thereupon and in front of the drawer brackets 225. The rear end of the drawer 120 and specifically the rear drawer clips 165 are then dropped upon the upper surface of the drawer rails 220. The drawer 120 is then shifted rearwardly with respect to the drawer rails 220, whereby to move the front drawer clips 160 under the drawer brackets 225 and to move the rear drawer clips 165 rearwardly until the downturned flanges 169 drop behind the rear of the associated drawer rail 220. The drawer 120 is now mounted in the operative position upon the drawer rails 220.

As the drawer 120 is moved toward the closed position thereof within the cabinet case 101, the drawer rail 220 moves inwardly until the resilient sleeve 217 on the stop arm 214 on the rear of the neutral member 210 is struck by the bumper 255 held in the rear of the case rail 201 by the stop flange 253 of the lock bracket 250; continued inward movement of the drawer now causes relative movement between the neutral member 210 and the drawer rail 220 until the front of the neutral member 210 strikes the rubber bumpers 175 on the rear of the drawer head 140 to halt movement of the neutral member 210 and prevent the rear end of the drawer rail 220 from striking the elongated arm 213 on the rear of the neutral member 210, it will be appreciated that the bumpers 175 on the rear of the drawer head 140 also finally abut against the front channel 111 to also stop inward movement of the drawer 120. If the drawer 120 is now pulled outwardly toward its fully extended position, the resilient sleeve 217 on the stop arm 214 at the rear end of the neutral member 210 cooperates with the bumper 260 carried by the stop arm 209 on the case rail 201 to hold or trap therebetween the stop arm 234 on the rear end of the inner ball cage 230 at the fully extended position of the case rail 201 preventing damage to the rear of the inner ball cage 230 by contact with the tangs 219 on the neutral member 210 if the ball cage 230 slips in the track due to normal manufacturing tolerances, the tangs 219 being spaced from the rear of the ball cage 230 when the neutral member 210 and the case rail 201 are in their fully extended positions. With continued outward movement the frictional engagement between the neutral member 210 and the drawer rail 220 will be overcome, the drawer being moved outwardly until the tangs 223 on the rear of the drawer rail 220 abut against the rivet heads 268 of the buffers 265 after which the outer ball cage 235 will abut the rear end thereof against the resilient material 269 of the rearmost buffers 265 and the tangs 219 on the neutral member 210 will push the forward ones of the buffers 265 against the forward ends of the tabs 239 on the outer ball cage 235, thereby to establish the final outer position of the drawer 120 with respect to the cabinet case 101.

It should be noted that in the telescoped or closed position of the drawer suspension 200, the stop flange 253 of the lock bracket 250 does not contact the stop arm 213 on the neutral member 210 due to the elongated bracket 212; the continued rearward movement of the neutral member 210 being prevented by contact between the rubber sleeve 217 on the stop arm 214 with the resilient cushion or bumper 255 positioned in the case rail 201, it being further noted that the bumper 255 also does not contact the stop arm 213 when the neutral member 210 and the case rail 201 are in the fully telescoped positions thereof. As seen from the above description, the stop arm 213 on the elongated bracket 212 does not affect the operation of the drawer suspension 200 and forms a part of the drawer suspension 200 only to prevent the unintentional disassembly of the drawer suspension 200 while the drawer suspension is out of the cabinet 100, the continued rearward movement of the drawer rail 220 from the fully telescoped position thereof being prevented by the stop arm 213. The crimped front ends 224 of the drawer rails 220 prevent the front most buffers 265 from dropping out of their position between the inner ball races 218 carried by the neutral member 210 and the outer ball races 222 carried by the drawer rail 220 when the drawer suspension 200 is out of the filing cabinet 100 and having the rear end of the drawer rail 220 in contact with the extended flange 213, the front end of the neutral member 210 being forward and spaced from the front end of the drawer rail 220 a distance sufficient for the buffers 265 to fall through.

Mounting the drawer 120 on or removing the drawer 120 from the above described suspension structure is described in U.S. Pat. No. 3,389,949, filed on June 14, 1966 by R. A. Studinski et al. and issued on June 25, 1968 for FILING CABINET AND SUSPENSION SYSTEM THEREFOR, the description thereof being incorporated herein by reference.

In passing it is also pointed out that the right-handmost case rail 201 carries thereon a lock bar guide 195, each of the lock bar guides 195 more particularly including a flat plate 196 suitably secured as by welding to the associated case rail 201 and having struck therefrom a pair of opposed and spaced-apart retaining flanges 197 that guide the lock bar 191 in the vertical movement with respect thereto.

Yet another important feature of the present invention resides in the fact that all of the parts of the suspension structures 200 are formed of sheet metal rolled or otherwise shaped to the form described and illustrated herein, the only parts not so formed being the several bumpers and ball bearings. More specifically, the case rail 201 including the lock bracket 250 thereon, the neutral member 210, the drawer rail 220, the ball cage 230 and the ball case 235 are all formed of sheet metal shaped as illustrated and described. Furthermore, the sheet metal forming the various parts is of relatively light gauge as will be appreciated from the following examples of the gauge of the sheet metal utilized. In a typical construction of the drawer suspensions 200, the case rail 201 is formed of 16 gauge steel, the neutral member 210 is formed of 16 gauge steel, the drawer rail 220 is formed of 16 gauge steel, the lock bracket 250 is formed of 12 gauge steel, and the ball cages 230 and 235 are formed of 24 gauge steel.

From the above description it will be seen that there has been provided an improved file cabinet, and specifically an improved drawer suspension structure therefor which fulfills all of the objects and advantages set forth above. While there has been described what is at present considered to be the preferred embodiment of the invention, it will be understood that various modifications may be made therein, and it is intended to cover in the appended claims all such modifications as fall within the true spirit and scope of the invention.

We claim:

1. A drawer suspension structure for mounting a drawer having pairs of drawer clips on the opposite sides thereof within a case for movement inwardly and outwardly with respect thereto, said suspension structure comprising a case rail carrying on the upper and lower edges thereof first inner ball races, a first stop arm mounted intermediate the front and the rear of said case rail between said first inner ball races and directed inwardly from said case rail, means for mounting said case rail upon an associated case, a neutral member disposed about said case rail and carrying on the upper and lower edges thereof first outer ball races respectively and second inner ball races integral with said neutral member and disposed outwardly with respect to said first outer ball races, a drawer suspension rail overlying said neutral member and carrying on the upper and lower edges thereof second outer ball races, a first ball cage carrying a first pair of inner sets of balls disposed between said first inner ball races and an adjacent one of said outer ball races, a second stop arm mounted on the rear of said first ball cage and directed outwardly therefrom, a second ball cage carrying a second pair of outer sets of balls disposed between said second inner ball races and the adjacent one of said second outer ball races, and a third stop arm mounted on the rear of said neutral member and directed outwardly therefrom, said third stop arm cooperating with said first stop arm in the fully extended position of said suspension structure to hold said second stop arm therebetween and to prevent the lagging of said first ball cage during movement thereof to the fully extended position of said suspension structure.

2. The drawer suspension structure set forth in claim 1, wherein said first stop arm carries a cushion of resilient material for engaging said second stop arm.

3. The drawer suspension structure set forth in claim 1, wherein said third stop arm carries a cushion of resilient material for engaging said second stop arm.

4. The drawer suspension structure set forth in claim 1, and further comprising cushioning structure disposed between said stop arms to cushion impact therebetween.

5. A drawer suspension structure for mounting a drawer having pairs of drawer clips on the opposite sides thereof within a case for movement inwardly and outwardly with respect thereto, said suspension structure comprising a case rail carrying on the upper and lower edges thereof first inner ball races, means for mounting said case rail upon an associated case, a neutral member disposed about said case rail and carrying on the upper and lower edges thereof first outer ball races respectively and second inner ball races integral with said neutral member and disposed outwardly with respect to said first outer ball races, a drawer suspension rail overlying said neutral member and carrying on the upper and lower edges thereof second outer ball races, a resilient cushion mounted on the rear of said case rail between said first inner ball races, and a stop arm mounted on the rear of said neutral member and directed outwardly therefrom to engage said resilient cushion mounted on the rear of said case rail to prevent continued rearward movement of said neutral member in the telescoped position thereof independently of said case rail.

6. The drawer suspension structure set forth in claim 5, wherein said resilient cushion mounted on the rear of said case rail includes walls conforming to the inner surfaces of said first inner ball races and said resilient cushion being housed completely in said case rail and said first ball races carried thereon.

7. The drawer suspension structure set forth in claim 5, and further comprising a flange mounted on the rear end of said case rail, said flange abutting said cushion mounted on the rear of said case rail between said first inner ball races to hold said cushion in said case rail, said flange extending outward of said case rail a distance no greater than said first inner ball races.

8. A drawer suspension structure for mounting a drawer having pairs of drawer clips on the opposite sides thereof within a case for movement inwardly and outwardly with respect thereto, said suspension structure comprising a case rail carrying on the upper and lower edges thereof first inner ball races, means for mounting said case rail upon an associated case, a neutral member disposed about said case rail and carrying on the upper and lower edges thereof first outer ball races respectively and second inner ball races integral with said neutral member and disposed outwardly with respect to said first outer ball races, a drawer suspension rail overlying said neutral member and carrying on the upper and lower edges thereof second outer ball races, a first pair of tangs on the forward end of said neutral member extending outwardly to close the forward end of said second inner ball races, a second pair of tangs on the rear end of said drawer rail extending inwardly to close the rear ends of said second ball races, and blocks of buffer material disposed between said second inner ball races and the adjacent one of said second outer ball races and disposed between cooperating pairs of said first and second tangs, said blocks or buffer material having an outer surface of resilient material and serving as bumpers between said neutral member and said drawer rail, the front ends of said second outer ball races carried by said drawer suspension rail being inwardly crimped to prevent the loss of said blocks of buffer material when said drawer suspension structure is in the fully telescoped position.

9. The drawer suspension structure set forth in claim 8, wherein said blocks of buffer material include a metal rivet having a head and a shank and resilient material covering said rivet shank.

10. The drawer suspension structure set forth in claim 8, wherein said blocks of buffer material include a metal rivet having a head and a shank and resilient material covering said rivet shank, said blocks of buffer material being positioned in said ball races to provide contact between said tangs and said rivet heads.

11. A drawer suspension structure for mounting a drawer having pairs of drawer clips on the opposite sides thereof within a case for movement inwardly and outwardly with respect thereto, said suspension structure comprising a case rail carrying on the upper and lower edges thereof first inner ball races, a first stop arm mounted intermediate the front and the rear of said case rail between said first inner ball races and directed inwardly from said case rail, means for mounting said case rail upon an associated case, a neutral member disposed about said case rail and carrying on the upper and lower edges thereof first outer ball races respectively and second inner ball races integral with said neutral member and disposed out-

wardly with respect to said first outer ball races a drawer suspension rail overlying said neutral member and carrying on the upper and lower edges thereof second outer ball races, a resilient cushion mounted on the rear of said case rail between said first inner ball races, said resilient cushion engaging said third stop arm to prevent continued rearward movement of said neutral member in the telescoped position thereof independently of said case rail, a first pair of tangs on the forward end of said neutral member extending outwardly to close the forward end of said second inner ball races, a second pair of tangs on the rear end of said drawer rail extending inwardly to close the rear ends of said second ball races, blocks of buffer material disposed between said second inner ball races and the adjacent one of said second outer ball races and disposed between cooperating pairs of said first and second tangs, said blocks of buffer material having an outer surface of resilient material, a first ball cage carrying a first pair of inner sets of balls disposed between said first inner ball races and an adjacent one of said outer ball races, a second stop arm mounted on the rear of said first ball cage and directed outwardly therefrom, a second ball cage carrying a second pair of outer sets of balls disposed between said second inner ball races and the adjacent one of said second outer ball races, said blocks of buffer material serving as bumpers between said neutral member and said drawer rail and between said tangs and said second ball cage when said drawer suspension structure is in the fully extended position thereof, and a third stop arm mounted on the rear of said neutral member and directed outwardly therefrom, said third stop arm cooperating with said first stop arm in the fully extended position of said suspension structure to hold said second arm therebetween and to prevent the lagging of said first ball cage during movement thereof to the fully extended position of said suspension structure.