United States Patent

[11] **3,568,898**

[72] Inventor **Roy J. Griffin, Jr.**
296 Araminta Drive, Winston-Salem, N.C. 27104

[21] Appl. No. **862,611**
[22] Filed **Sept. 5, 1969**
[45] Patented **Mar. 9, 1971**

[54] **EVERTING APPARATUS AND METHOD**
15 Claims, 6 Drawing Figs.

[52] **U.S. Cl.** **223/43**
[51] **Int. Cl.** **A41h 43/00**
[50] **Field of Search** ..... 17/43; 223/39—43; 66/149, 149 (Suction); 15/304

[56] **References Cited**

UNITED STATES PATENTS

604,512	5/1898	Barrie	223/39
775,992	11/1904	Shallenberger	223/39X
878,995	2/1908	Palmer	223/39X
941,164	11/1909	Murphy	223/39
952,274	3/1910	Palmer	223/39X
1,030,336	6/1912	Shields	223/39
2,314,202	3/1943	Ewer et al.	223/39X
2,428,943	10/1947	Plummer	223/40
3,215,321	11/1965	Whittemore	223/39

Primary Examiner—Patrick D. Lawson
Assistant Examiner—Geo. V. Larkin
Attorney—Charles Y. Lackey

ABSTRACT: Apparatus and method for everting a supply of a tubular fabric utilizing an elongated, hollow, tubular member about the exterior of which can be collected a supply of tubular fabric by the utilization of a selectively directed air stream. The collected fabric is then directed into and through the interior of the tubular member by a second selectively directed air stream so that the inside of the fabric is turned to the outside and the fabric emerges from the tubular member in an everted condition. Various drive and guide means are incorporated to move the fabric to the tubular member and receive the fabric from the tubular member for conveyance to a remote location.

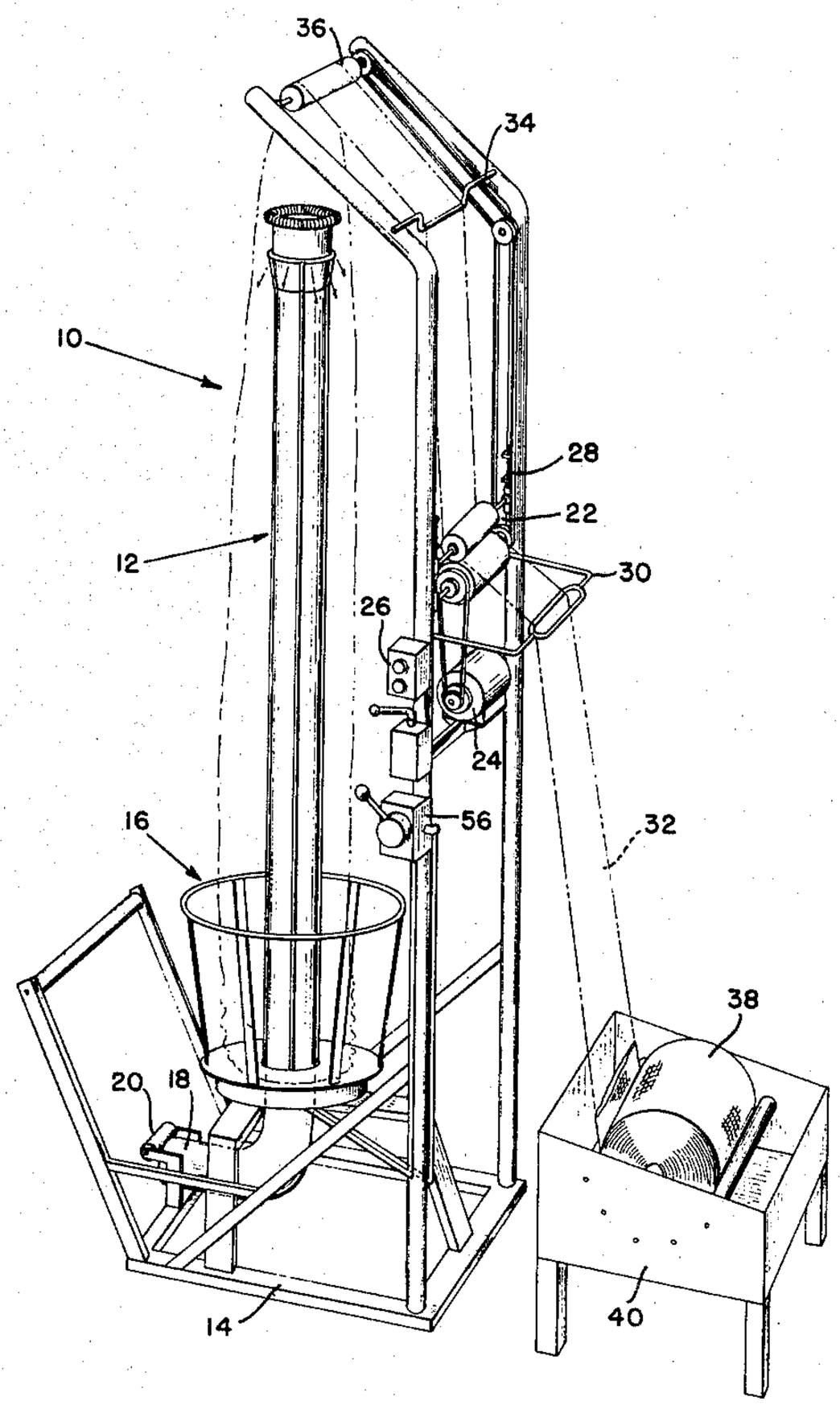

PATENTED MAR 9 1971

3,568,898

SHEET 1 OF 2

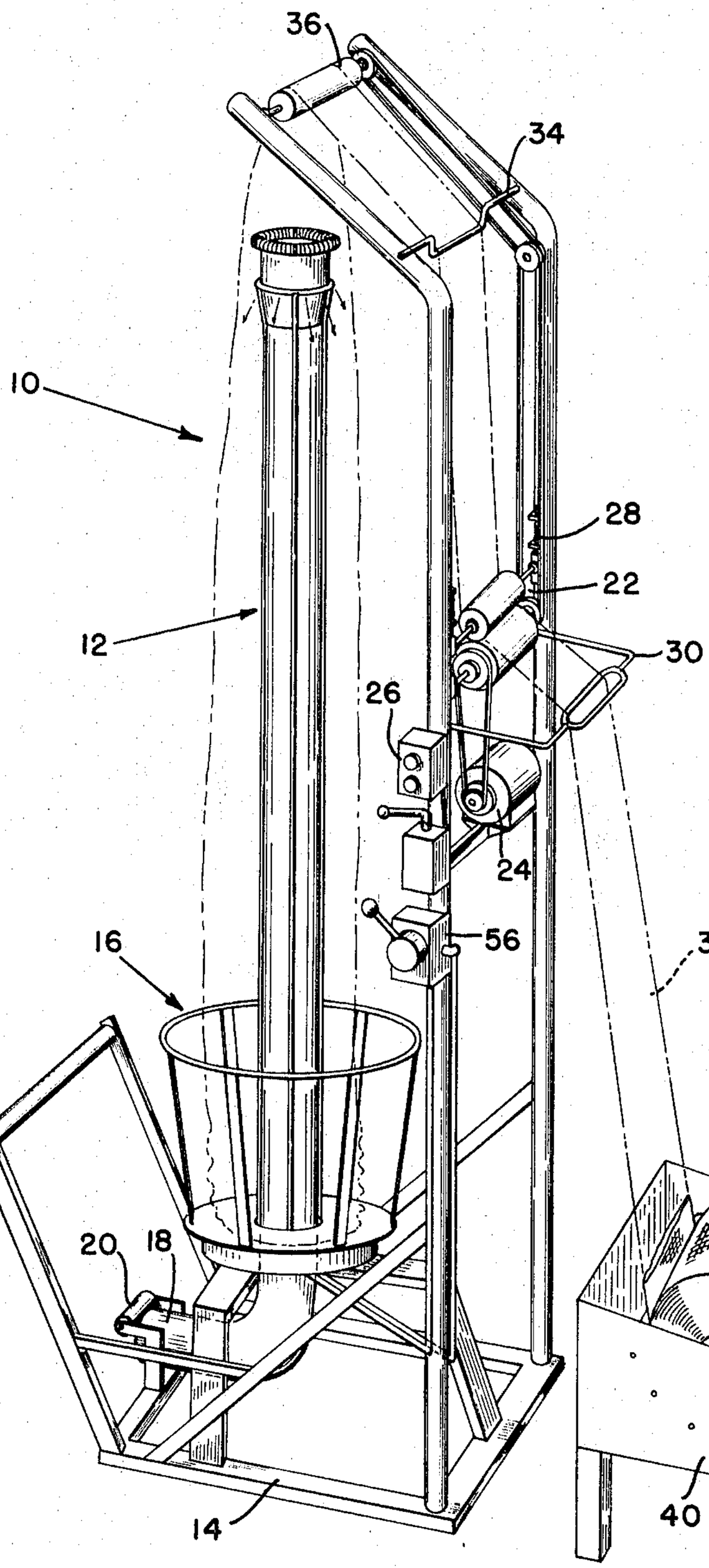

FIG. 1

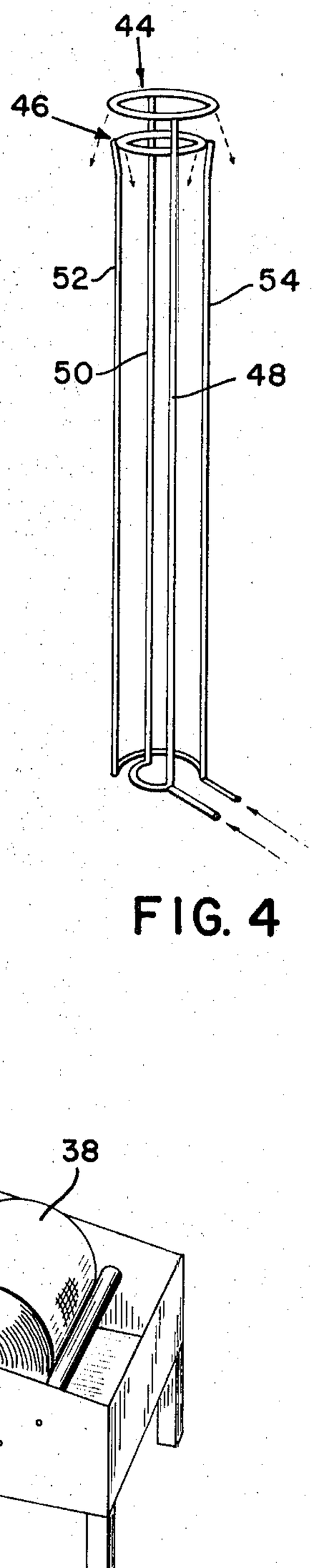

FIG. 4

INVENTOR

BY

attorney

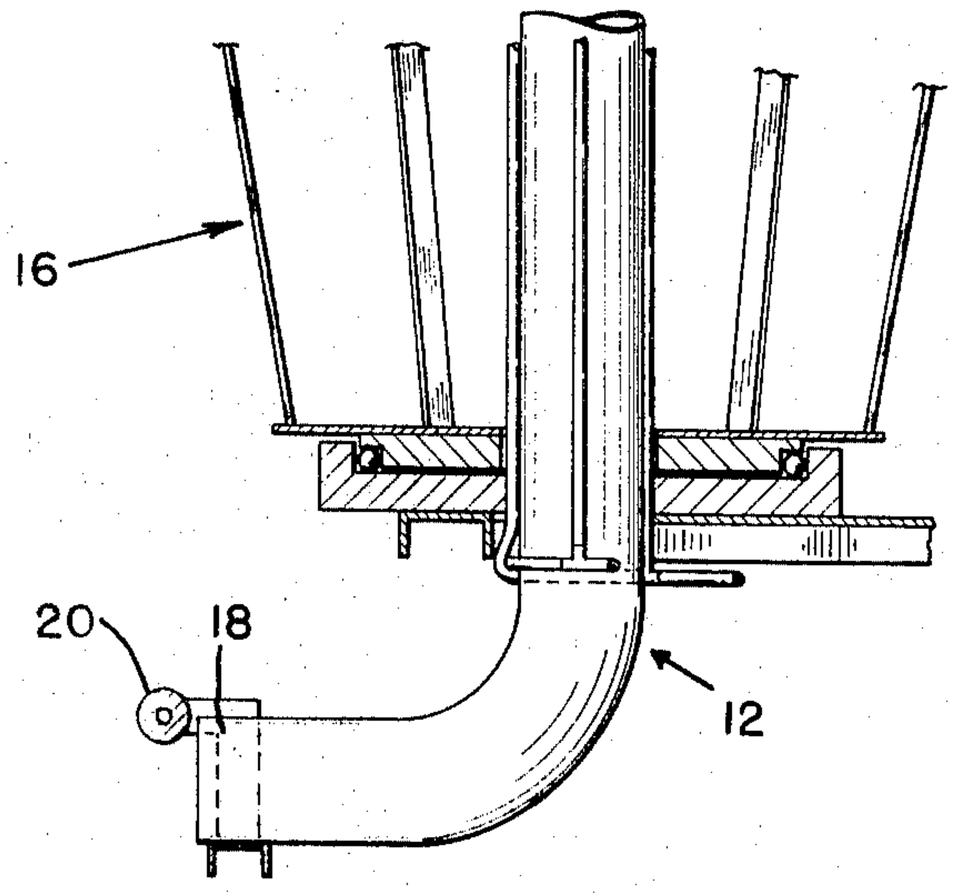

FIG. 2

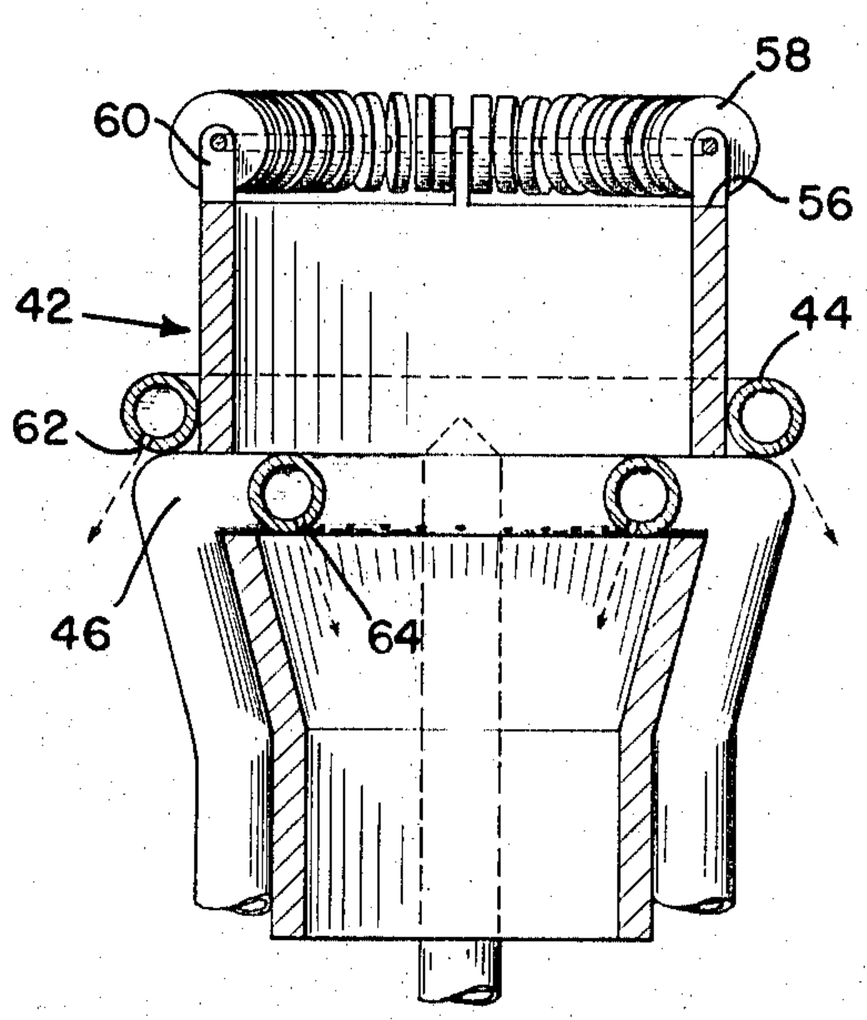

FIG. 5

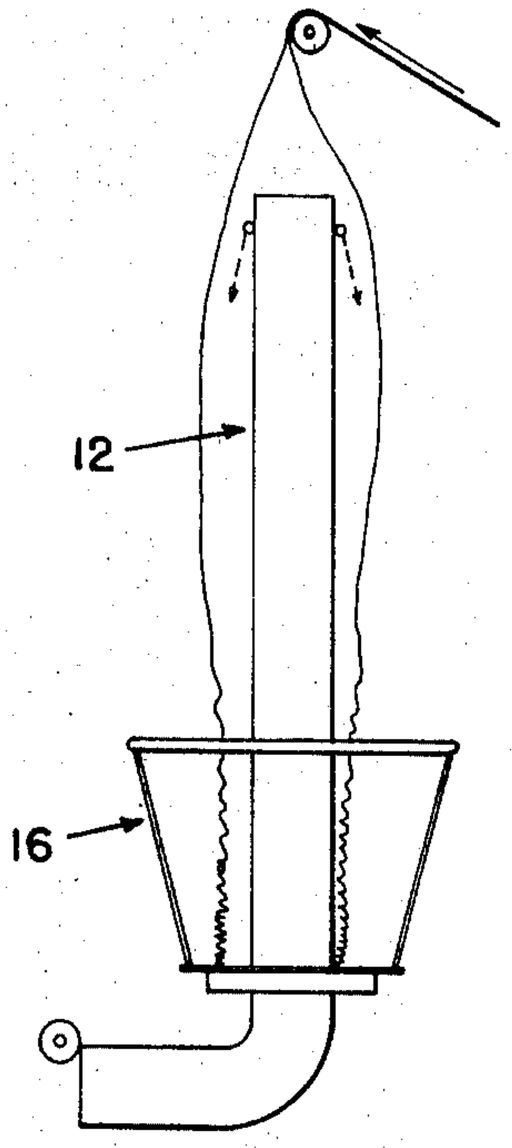

FIG. 3a

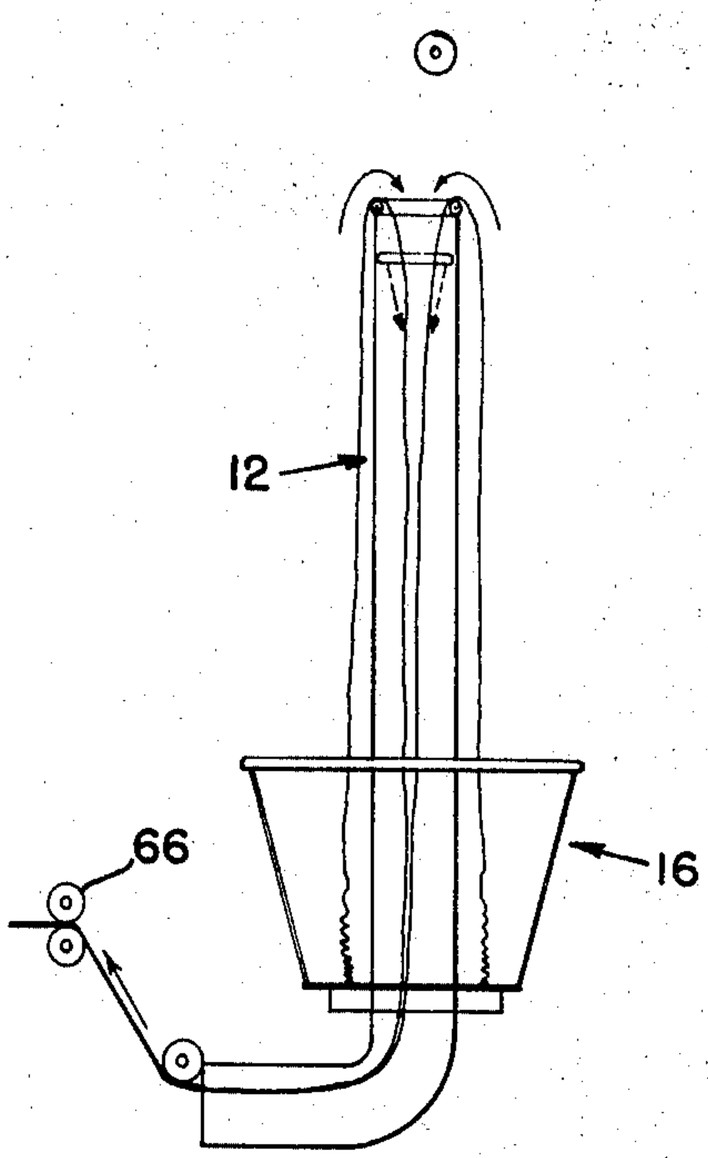

FIG. 3b

INVENTOR

BY

attorney

EVERTING APPARATUS AND METHOD

BACKGROUND OF THE INVENTION

Tubular fabric which is produced, for example, in continuous fashion by large-diameter knitting machines until a desired supply is accumulated is usually collected with the fabric dresser or finished exterior outside as the fabric emerges from the machine. Unfortunately, when this fabric is cut and subsequently positioned for seaming to form a finished garment, it is necessary that the fabric interior be exposed to the outside so that the seam will be covered when the garment is everted after completion. Because it is necessary to sew the garments with the inside of the fabric directed upwardly, it is necessary to turn or evert the tubular fabric taken from the knitting machine after it has been dyed or otherwise finished so that it may be spread for the subsequent cutting and seaming operation with the inside of the fabric facing outwardly.

It has been conventional practice in the cloth manufacturing industry to evert tubular fabric by drawing the fabric along a horizontal circular member by means of heavy frictionally engaging rollers pulling the fabric inside out across the member. These rollers are covered with the leather or some other substance not greatly susceptible to wear, and the fabric itself is often damaged by stretching, tearing or snagging during this everting operation. The damage and waste resulting from the operation has precipitated the development of the disclosed invention which avoids any waste and damage caused by the actual everting of the material.

BRIEF DESCRIPTION AND OBJECTIVES OF THE INVENTION

The turning apparatus illustrated and described herein includes a very essential elongated tubular member preferably positioned in a vertical arrangement which initially collects a supply of tubular fabric that is moved from the supply location by fabric drive means and guide means to the top end of the tubular member. As the fabric is presented to this top end, pneumatic means urges the fabric down around the tubular member until the entire supply is collected thereabout. At that time, the second end of the fabric is introduced into the interior channel of the tubular member and carried therethrough by other pneumatic means whereupon a suitable device receives the fabric and draws it away from the tubular member to a remote location. The annular upper end of the tubular member is provided with a plurality of free spinning rollers which facilitate movement of the tubular fabric initially over the outside of the member until it is removed therefrom. Because of the novel pneumatic arrangement for first collecting the fabric and then directing it back through the channel interior, the apparatus can be operated at very high speeds compared to the speeds experienced with conventional equipment.

From the foregoing brief description, it will be obvious that a primary objective of the present invention is to provide an apparatus and method for everting a supply of tubular fabric without the danger of damage to the fabric during the everting operation. In development the apparatus and method comprising the present invention, other objectives were to provide novel pneumatic means for moving fabric over and about the exterior of the tubular member and then back again through the interior of that member to accomplish the everting operation. It is also an object of the present invention to provide apparatus and method for everting fabric at speeds heretofore unattainable in this particular operation.

These and other objects of the present invention will become more apparent after a consideration of the following detailed description taken in conjunction with the accompanying drawings wherein like characters of reference designate like parts throughout the several views.

FIGURE DESCRIPTION

FIG. 1 is a perspective schematic view of the everting apparatus comprising a portion of the present invention illustrating the collection of tubular fabric about the exterior of the tubular member as it is fed from a remote supply.

FIG. 2 is a side elevational, sectional and fragmentary view of the lower discharge portion of the tubular member of the turning apparatus disclosed herein.

FIG. 3 is a side elevational schematic view of tubular fabric being collected or loaded about the outside of the tubular member exterior.

FIG. 3*b* is a side elevational schematic view of the collected fabric being introduced and drawn through the interior of the tubular member to accomplish the everting operation.

FIG. 4 is a perspective fragmentary view of the pneumatic system used to convey the material about and through the tubular member.

FIG. 5 is a side elevational, sectional, fragmentary and enlarged view of the upper end of the tubular member showing the disposition of the pneumatic system thereabout and the attachment of a plurality of free spinning rollers to accommodate movement of the fabric as it goes over and through the tubular member.

DETAILED DESCRIPTION OF THE DISCLOSURE

Referring now to the drawings and particularly to FIG. 1, an everting apparatus shown generally at **10** is fabricated preferably by positioning a tubular member **12** in an upright or vertical position as shown and supporting that member on a frame **14** in any suitable manner. It is contemplated that frame **14** may be positioned directly on a working surface or, alternatively, the frame can be recessed within an evacuated space so that the floor level corresponds to the fabric collecting device **16**. Tubular member **12** has preferably a turned lower end **18** which permits the fabric everted therethrough to be drawn outwardly in a horizontal direction and upwardly about a guide roller **20** to a separate collecting means.

Frame **14** is equipped with a pair of drive rolls **22** which are driven by a variable speed motor **24** in response to conveniently positioned controls **26**. Suitable components **28** are included to permit adjustment of the drive rolls **22** so that a greater or lesser degree of tension between the rolls can be provided if necessary or desired. A guide **30** extends outwardly from frame **14** below the drive rollers to keep the fabric supply **32** in a consistent condition prior to entry between the drive rolls **22**. Another fabric guide member **34** is positioned subsequent the drive rolls **22** and a roller **36** disposed substantially above the upper end of tubular member **12** permits an even dispensation of tubular fabric downwardly therefrom.

The roll **38** of tubular fabric **32** is preferably positioned in a suitable apparatus **40** for permitting expeditious unwinding as the drive rolls **22** draw the tubular fabric upwardly therefrom. The roll **38** contains a preselected supply of tubular fabric in a convenient working length, and it will be readily apparent that this supply can be varied to any extent and limited only by the height of tubular member **12**.

The upper end of tubular member **12** shown generally as **42** carries a novel arrangement of outer and inner ring-shaped air manifolds **44** and **46** which are connected by plural air lines **48**, **50** and **52**, **54** through a pneumatic switch **56** to an air source (not shown). The arrangement of these components about the exterior and interior surface of tubular member **12** is best shown in FIG. **4** wherein it can be seen that the inner manifold **46** is disposed within the interior of the member **12** while the remaining components are secured to the exterior surface of member **12**.

The annular edge **56** of the top of tubular member **12** supports a plurality of free spinning rollers **58** suitably held by appropriate brackets **60** to facilitate movement of the tubular fabric over the member end **56** as the fabric is collected about the exterior of member **12** and back again through the interior during the everting operation. The outer manifold **44** contains a plurality of apertures **62** in and around the ring **47** to form air jets directing air flow outwardly and downwardly from and

at angles preferably or less than 90° with the longitudinal axis of member 12. The inner annular manifold 46 also contains a plurality of apertures 64 forming air jets directing air flow inwardly and downwardly from and at angles preferably of less than 90° with the longitudinal axis of the member. The operation of the apparatus will now be described in detail which description will include the precise function and operation of the manifolds 44 and 46 as well as the free spinning rollers 58.

A roll 38 of tubular fabric 32 is disposed for expedient unwinding, and the first end of the fabric is extended upwardly through guide 30, delivery rolls 22, guide 34 and over roller 36 so that the fabric tube envelops the upper end 42 of member 12. At this location, air pressure is applied through apertures 62 of manifold 44, and the air jet formed thereby urges the tubular fabric downwardly over and around the outside surface of member 12 to the collecting device 16 below. The speed of this collecting operation is regulated by the speed of motor 24 as the air jets provided through apertures 62 can collect the material about the exterior of member 12 as quickly as it can be delivered by rolls 22. The operation continues until the entire roll 38 of fabric 32 is collected about the exterior of member 12.

After the roll 38 has been depleted, the terminal fabric end of that roll is introduced into the member interior over rollers 58 so that it becomes subjected to the air jet formed by the inner manifold ring 46 and apertures 64 contained therein. These air jets are directed against the fabric to move it downwardly and through the interior of member 12 and outwardly therefrom as shown in FIG. 3*b*. Again, the speed of this operation is controlled by the exterior fabric drawing device 66 as the fabric can be moved through the channel interior at any convenient rate by varying the pressure of the air jets.

While the preferred embodiment of the present invention is centered about a vertically disposed tubular member, it will be apparent that the member can be horizontally situated with equal effectiveness should floor space not be a crucial factor. It is also apparent that suitable apparatus can be applied to the frame 14 at the location above the upper end 42 of member 12 to automatically introduce the tubular fabric over the member 12 and automatically control and insert the terminal end of fabric 32 into the interior of member 12. As has been previously noted, the operating speed of the apparatus disclosed is limited only by the fabric driving capability, and this will vary in accordance with the weight and characteristics of the fabric being everted.

While a novel apparatus has been developed for everting tubular fabric, it will be apparent that the method of everting in continuous fashion is novel and affords advantages in cloth manufacturing operations heretofore unattainable. It can be seen that the method includes the positioning of tubular fabric at one end of an elongated tubular member such as 12 illustrated in FIG. 1, collecting the fabric around the member 12 by selectively directing air flow, inserting and displacing the fabric into and through the interior of the member 12 by selectively directed air flow and drawing the fabric outwardly from the member interior in an everted condition.

Many modifications and variations may be made in the embodiment of the present invention disclosed without departing from the spirit and purpose thereof, and changes in the tubular member, pneumatic systems and drive and guide controls as well as other components are contemplated. It is the intent to be restricted only by the scope of the appended claims and to be accorded the use of mechanical equivalents to the components disclosed.

I claim:

1. Apparatus for everting a supply of tubular fabric comprising: an elongated tubular member having an interior channel; means directing the movement of the tubular fabric to said member; means collecting the tubular fabric supply over one end of said member; pneumatic means moving the fabric through said interior channel of said member whereby the inside of the tubular fabric is turned to the outside and everted.

2. Apparatus as claimed in claim 1, said directing means including fabric drive means and fabric guide means directing the tubular fabric from the fabric supply to said tubular member.

3. Apparatus as claimed in claim 2, said fabric guide and drive means including a frame extending to at least one end of said tubular member and at least one pair of variable speed delivery rolls adjacent said frame moving the tubular fabric.

4. Apparatus as claimed in claim 3, said collecting means including outer air means directing air flow to engage and position the fabric over said member end, said air means including outer manifold means positioned on said member end having a plurality of air jets directing air flow against the fabric to urge the fabric about said tubular member, and said outer manifold means comprising an outer annular manifold ring encircling the exterior of said tubular member adjacent said member end, an air source, and air line means extending from said source to said outer annular ring, and said air jets including a plurality of apertures in and around said ring, said apertures positioned to direct air flow outwardly from and at angles less than 90° with the longitudinal axis of said tubular member.

5. Apparatus as claimed in claim 1, said collecting means including outer air means directing air flow to engage and position the fabric over said member end.

6. Apparatus as claimed in claim 5, said outer air means including outer manifold means positioned on said member end having a plurality of air jets directing air flow against the fabric to urge the fabric about said tubular member.

7. Apparatus as claimed in claim 6, said outer manifold means comprising an outer annular manifold ring encircling the exterior of said tubular member adjacent said member end, an air source, and air line means extending from said source to said outer annular ring, and said air jets including a plurality of apertures in and around said ring, said apertures positioned to direct air flow outwardly from and at angles less than 90° with the longitudinal axis of said tubular member.

8. Apparatus as claimed in claim 1, said pneumatic means including inner air means directing air flow to displace the fabric through said tubular member interior channel.

9. Apparatus as claimed in claim 8, said inner air means including inner manifold means positioned adjacent said tubular member end having a plurality of air jets directing air flow against the fabric to urge it through said tubular member interior channel.

10. Apparatus as claimed in claim 9, said inner manifold means including an inner annular manifold ring encircling said member interior channel, an air source, and air line means extending from said source to said annular ring, and said air jets including of plurality of apertures in and around said ring, said apertures positioned to direct air flow inwardly toward and at angles of less than 90° with the longitudinal axis of said tubular member.

11. Apparatus as claimed in claim 1, said pneumatic means including inner air means directing air flow to displace the fabric through said tubular member interior channel, said inner air means including inner manifold means positioned adjacent said tubular member end having a plurality of air jets directing air flow against the fabric to urge it through said tubular member interior channel, and said inner manifold means having an inner annular manifold ring encircling said member interior channel, and air source, and air line means extending from said source to said annular ring, and said air jets including a plurality of apertures in and around said ring, said apertures positioned to direct air flow inwardly toward and at angles of less than 90° with the longitudinal axis of said tubular member.

12. Apparatus as claimed in claim 11 further comprising roller means facilitating movement of the fabric over said tubular member end and through said tubular member interior channel, said roller means including a plurality of free spinning rollers rotatably held about the annular edge of said tubular member, and said apparatus further comprising means drawing the everted fabric outwardly from said tubular member interior channel to a remote location.

13. Apparatus as claimed in claim 1 further comprising roller means facilitating movement of the fabric over said tubular member end and through said tubular member interior channel, said roller means including a plurality of free spinning rollers rotatably held about the annular edge of said tubular member.

14. Apparatus as claimed in claim 13 further comprising exterior fabric drawing means drawing the everted fabric outwardly from said tubular member interior channel to a remote location.

15. A method of everting a supply of tubular fabric comprising the steps of: directing the tubular fabric to one end of an elongated tubular member; collecting the fabric around and onto the member by selectively directed air flow; inserting and displacing the fabric into and through an interior channel of the member by selectively directed air flow; and drawing the fabric outwardly from the member interior channel in an everted condition.