United States Patent

[11] **3,563,243**

[72] Inventor **Julius A. Lindquist**
Somerville, N.J.

[21] Appl. No. **699,096**
[22] Filed **Jan. 19, 1968**
[45] Patented **Feb. 16, 1971**
[73] Assignee **Johnson & Johnson**
a corporation of New Jersey

[54] **ABSORBENT PAD**
8 Claims, 9 Drawing Figs.

[52] **U.S. Cl.** **128/287**
[51] **Int. Cl.** **A61f 13/16**
[50] **Field of Search** 128/284, 287, 290, 296

[56] **References Cited**

UNITED STATES PATENTS

3,024,207	3/1962	Shaw et al.	128/290
3,059,644	10/1962	Atkinson	128/290
3,072,123	1/1963	Davis	128/284
3,295,526	1/1967	Sabee	128/287
3,431,911	3/1969	Meisel, Jr.	128/287

Primary Examiner—Charles F. Rosenbaum
Attorneys—Alexander T. Kardos, Arnold S. Worfolk and Harold L. Warner

ABSTRACT: Absorbent pads, such as diapers, underpads and the like are made in which a hydrophilic foam sheet formed of hydrophilic polymer is contained between a facing and backing and acts as the primary absorbent in the product. The edges of the hydrophilic foam sheet are completely contained within the peripheral edges of the absorbent pad and secured against lateral extension, when wet. In the preferred structure crepe cellulose tissue is placed in contact with a surface of the hydrophilic foam sheet with the creping of the tissue, particularly where the absorbent pad is for use as a diaper, running lengthwise of the diaper.

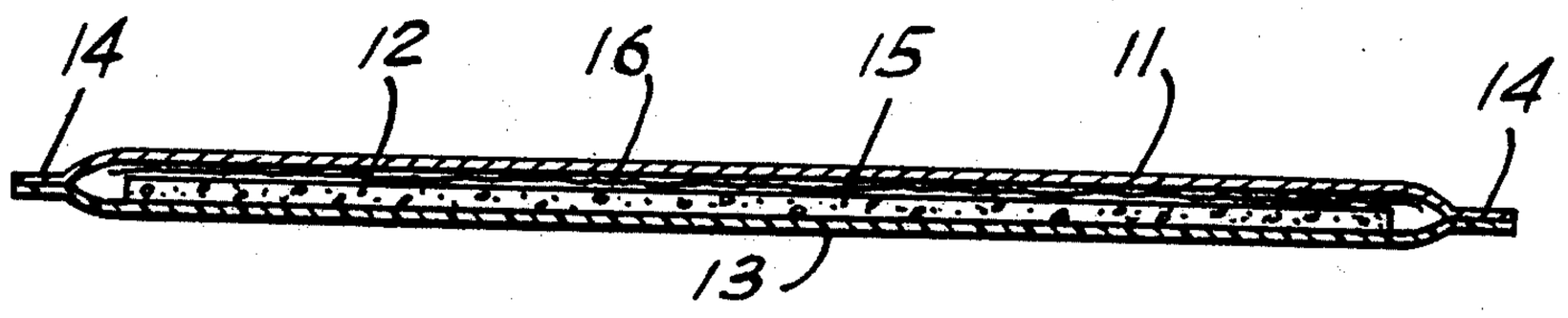

PATENTED FEB 16 1971

3,563,243

SHEET 1 OF 2

Fig. 1.

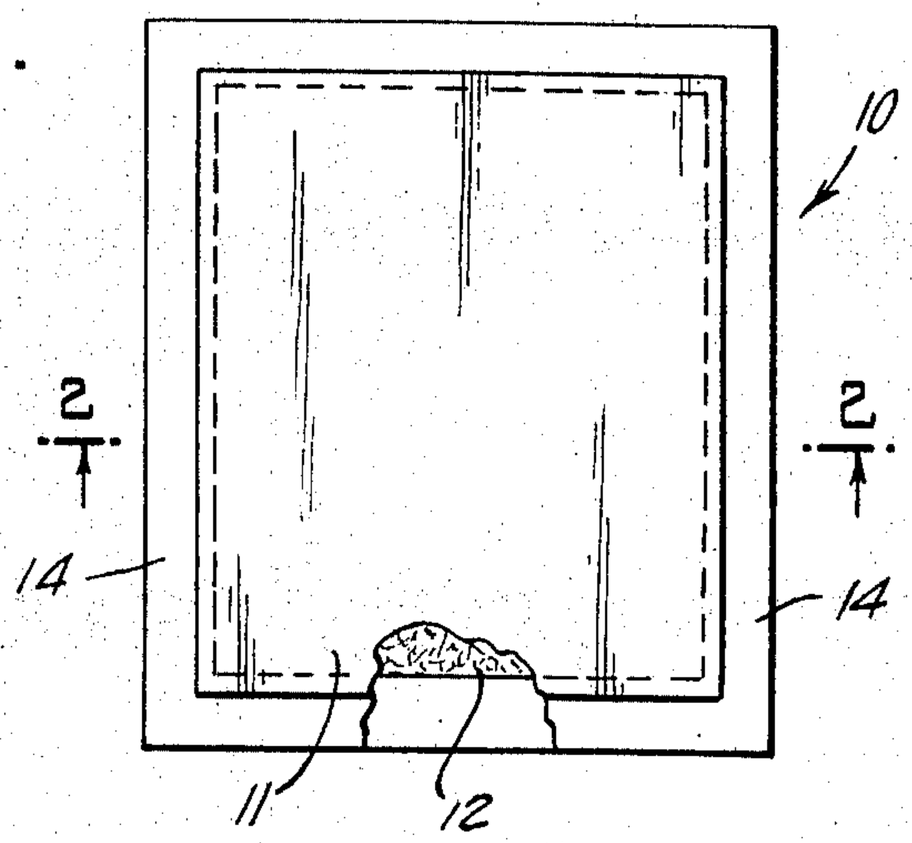

Fig. 2.

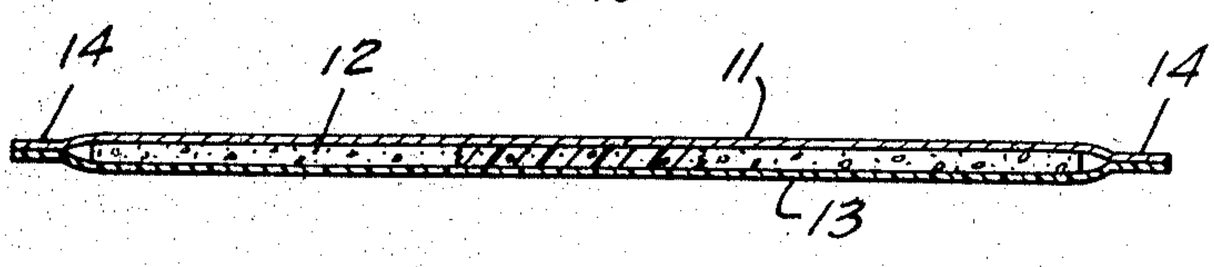

Fig. 3.

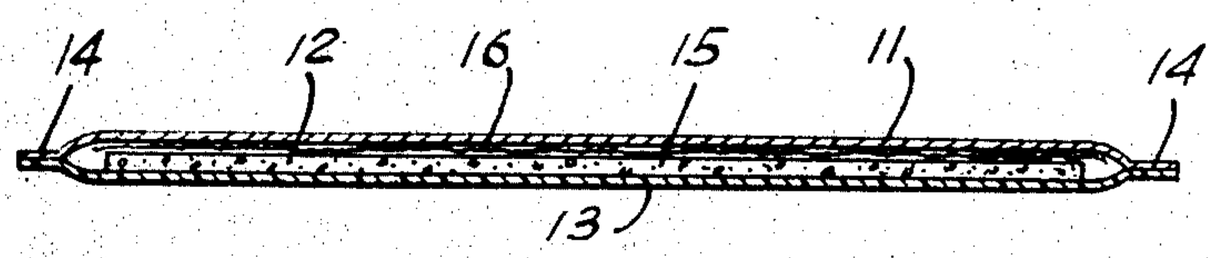

Fig. 4.

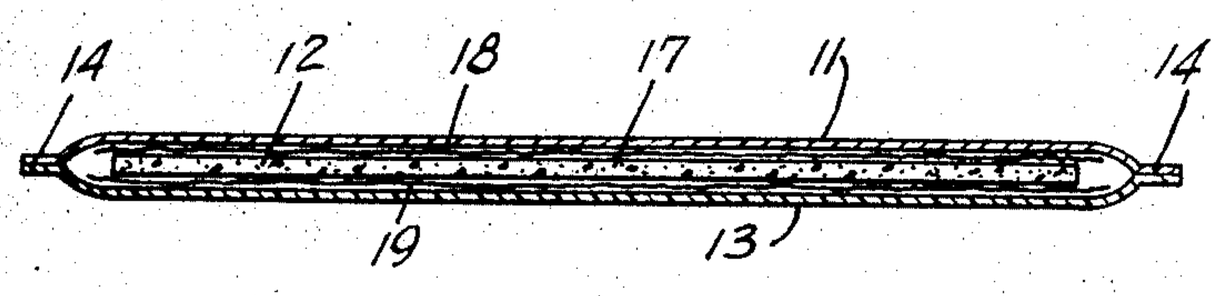

Fig. 5.

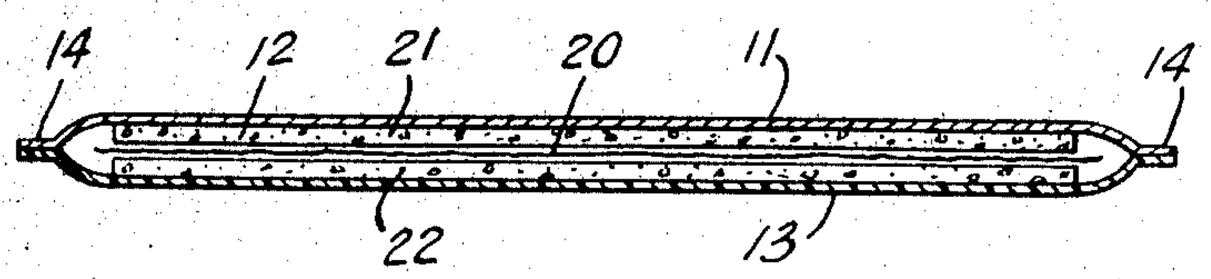

Fig. 6.

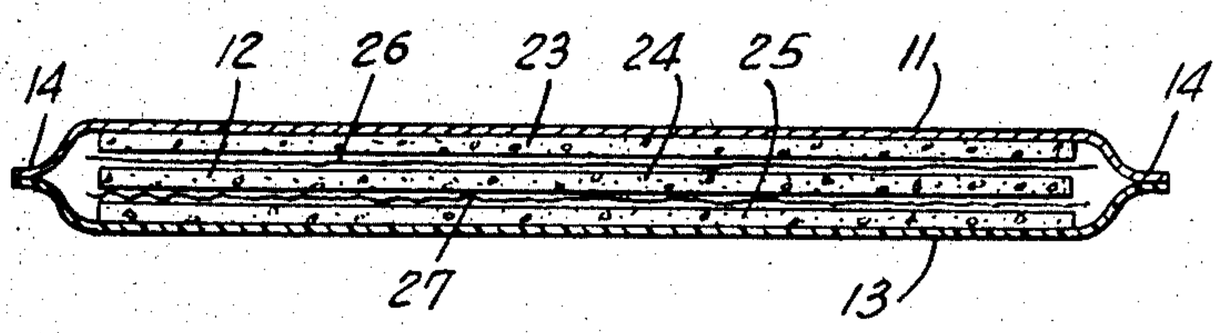

INVENTOR
JULIUS A. LINDQUIST

BY
Harold L. Warn.
ATTORNEY

FIG. 7.

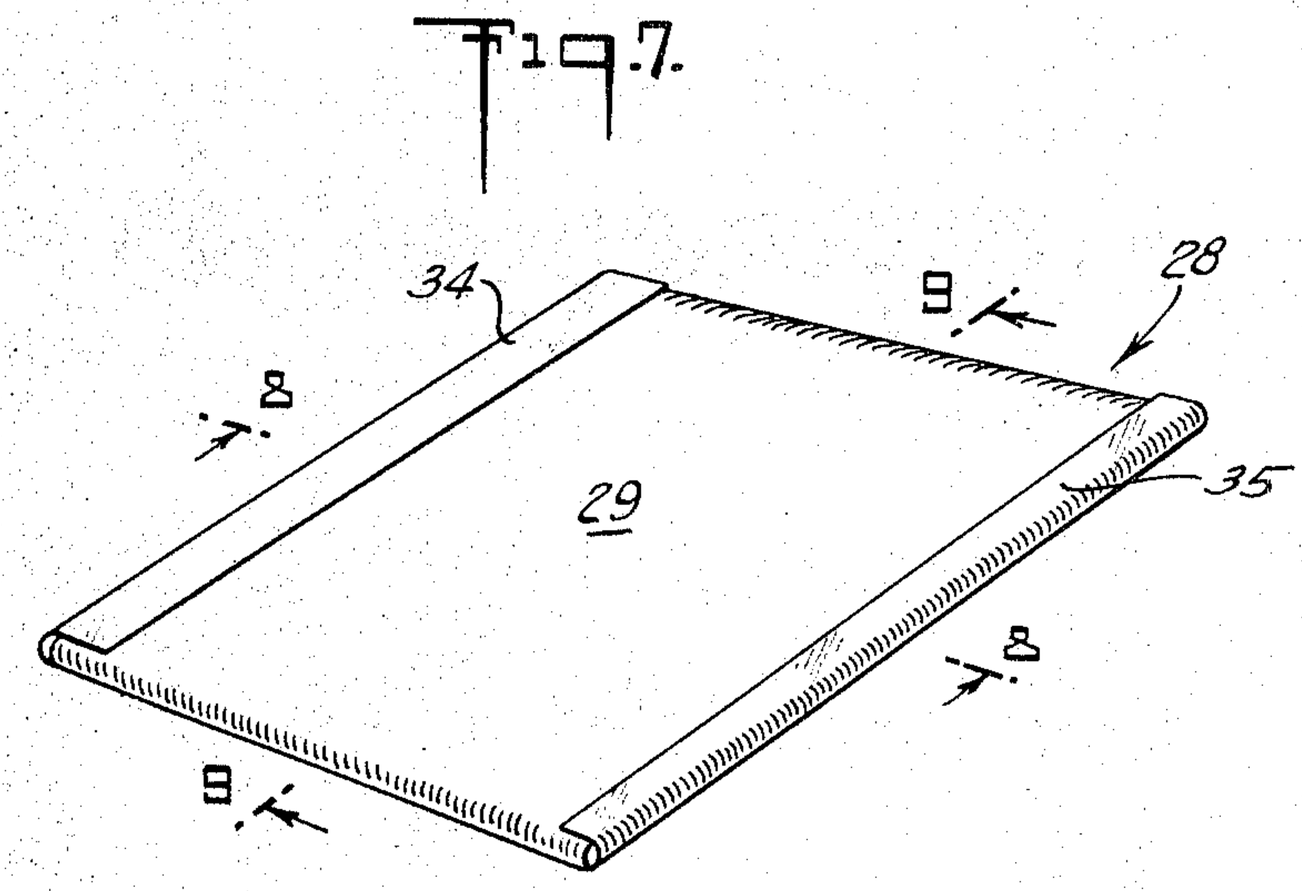

FIG. 8.

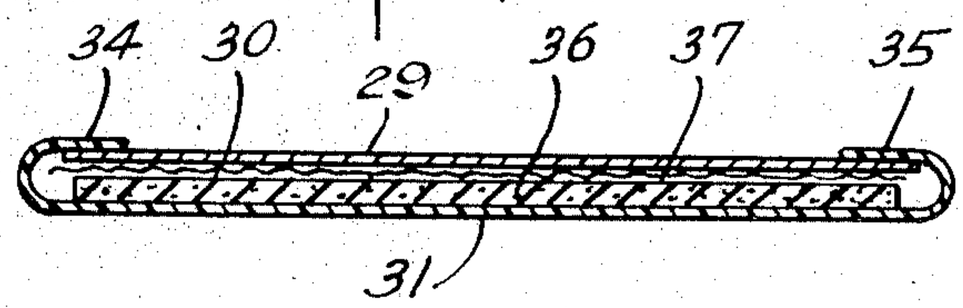

FIG. 9.

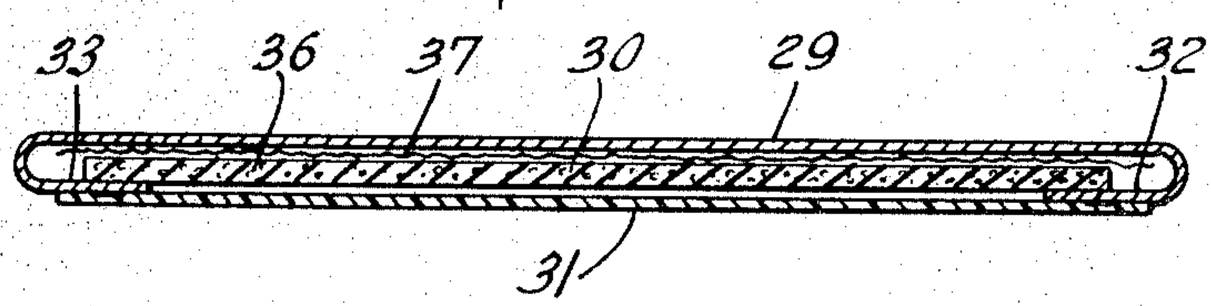

INVENTOR
JULIUS A. LINDQUIST.

BY
Harold L. Wagner
ATTORNEY

ABSORBENT PAD

BRIEF DESCRIPTION OF THE INVENTION

It has heretofore been the practice in the manufacture of diapers, underpads, and the like to use cellulosic fibers as the basic absorbent. Where the product was designed for a single use, such as in the construction of disposable diapers and underpads the absorbent was frequently formed of short length cellulosic fibers such as wood pulp and cotton linters which were generally present in the form of cellulose wadding, where the fibers are compacted together in the form of relatively thin absorbent paper sheets or in the form of a relatively loose bulky fiber mass. This absorbent material is then contained between a flexible backing and facing to form the disposable product.

One of the difficulties with such products is that the absorbent, where cellulose wadding is used, tends to shred after wetting. The cellulose fibers of the absorbent tend to bunch together on wetting forming hard, uncomfortable spots in the absorbent pad. Also, where wood pulp or other short fibers are used, unless appreciable bonding material is used, for holding the fibers together, there is a tendency for the fibers to shift or settle, giving a nonuniform absorbent layer in the absorbent product. It has now been discovered that these problems can be alleviated and absorbent pads having greater absorbency per given weight and of greater softness and resiliency when wet obtained with resulting greater comfort to a user by employing as the primary absorbent, hydrophilic foam sheets formed of a hydrophilic polymer.

In accordance with the present invention absorbent pads are prepared with the primary absorbent of the pad being formed of a sheet or sheets of hydrophilic foam in which the polymer forming the foam is itself hydrophilic in nature. The use of hydrophilic foam sheet has many advantages over the use of cellulose wadding or wood pulp as the primary absorbent material. When wet, the hydrophilic foam sheet does not lose its resiliency but maintains its cushioning and resilient characteristics thus giving a comfortable absorbent product both in the dry and in the wet state. Also, for equal weight the absorbent capacity of the hydrophilic foam sheet is substantially greater than that of cellulose wadding or wood pulp thus providing greater protection for an equal weight pad than has heretofore been obtainable with the conventional cellulose fiber absorbent fillers. Another advantage of the hydrophilic foam sheets is that the same have substantial strength with the result that they maintain their original sheet form with no shredding or bunching of the absorbent in the product. Also, absorbed water acts as a plasticizer making the hydrophilic foam sheet softer, more flexible, and conforming when wet with the result that absorbent pads using the same actually improve in physical characteristics on wetting rather than deteriorating as has been the problem with the conventional cellulosic fiber absorbents. This results in substantially more comfort to a user.

DETAILED DESCRIPTION OF THE PRESENT INVENTION

The present invention will be described primarily in connection with a disposable diaper. However, it will be apparent that constructions similar to that described for the disposable diaper can be equally well used for absorbent underpads, or other absorbent sheetlike products, the main difference being an increase in size or other dimensions of the absorbent product.

In practicing the present invention the primary absorbent material for the diaper is hydrophilic foam sheet in which the hydrophilic foam is formed of a hydrophilic polymer. Hydrophilic foam sheet materials that may be used, for example, are cellular plastics in sheet form formed by combining poly (oxyethylene) glycols, reaction products of ethylene oxide with ethylene glycol, diethylene glycol and water, with diisocyanates, for example, 2,4-Toluenediisocyanate, 2,6-Toluenediisocyanate or Toluenediisocyanate isomer mixtures.

The foaming is carried out in conventional manner. Thus, a specific example would be where the foam for the polyurethane foam is obtained through the reaction of poly (oxyethylene) diol and toluenediisocyanate in the presence of water, catalyst, and foam stabilizer in the following proportions:

	Parts by weight
Poly(oxyethylene) diol, 2,000 M.W	100
Toluenediisocyanate (80/20 ratio blend of 2, 4-toluenediisocyanate and 2, 6-toluenediisocyanate)	38
Water	3. 1
Silicone stabilizer	1
Triethylenediamine	0. 15
Stannous octoate	0. 17

The foam sheet material used should be sufficiently flexible and resilient when in the dry state to give a resilient conformable product. This initial resiliency may be obtained with foams formed of cellulose, which are normally relatively stiff when dry, by the inclusion of a plasticizer. One of the substantial advantages of using the hydrophilic foam sheets as the absorbent, is that the same do not lose their initial resiliency or body on wetting, as do most absorbents made out of cellulosic fibers, but rather increase in softness and resiliency assuring a soft cushiony feel even after absorption of substantial quantities of water. One of the primary advantages of the polyurethane hydrophilic foams is that soft resilient foam products result from the foamed polymer alone without the necessity of including plasticizers.

Hydrophilic foam sheets formed of hydrophilic polymers, however, do have the characteristic that when the same have absorbed substantial quantities of water they expand, increasing not only in thickness but also in their overall dimensions. It is thus necessary that the foam sheet be restrained from lateral expansion within the absorbent pad around its edges as the hydrophilic foam will otherwise expand to the point where it extends substantially beyond the edges of the absorbent pad. Also many hydrophilic foam sheet materials, after they have absorbed appreciable amounts of water, tend to become much more limp than when dry and unless supported tend to sag appreciably.

The hydrophilic foam sheet may be used in any desired thickness. Where the polymer foam has substantial softness and resiliency, the thickness might be limited only by the thickness and drape of the absorbent pad. However, where the polymer foam is relatively stiff, the foam sheets should be relatively thin to improve the flexibility of the final product and preferably used together with hydrophilic foam sheets of greater softness to create the desired softness in the final product. In general practice, however, where using hydrophilic polyurethane foams the thickness of the polyurethane foam sheet will be in the range of about 1/32 to ½inch.

Although foam hydrophilic sheets have substantial tensile strength even with thickness of only 1/32 inch, they become extremely limp when wetted and have a tendency to sag badly and stretch unless supported. Accordingly, in practicing the present invention the hydrophilic foam sheet is supported by a backing sheet which has sufficient resistance to deformation and has sufficient strength to adequately support the hydrophilic foam sheet when wet and prevent its sagging.

To aid in the description of the present invention reference is made to the accompanying drawings which illustrate several embodiments of the same. The embodiments illustrated in the drawings are for purposes of illustration only, and the invention is not limited thereto.

Referring to the drawings:

FIG. 1 is a top plan view of a diaper made in accordance with the present invention;

FIG. 2 is a cross-sectional view taken along lines 2–2 of FIG. 1;

FIG. 3 is a cross-sectional view, similar to that of FIG. 2 of a diaper of somewhat different internal construction;

FIGS. 4, 5, and 6 are each cross-sectional views, similar to that of FIGS. 2 and 3, showing still further modifications of the absorbent;

FIG. 7 is a perspective view of a diaper with a different manner of containing the absorbent;

FIG. 8 is a cross-sectional view taken along line 8–8 of FIG. 7; and

FIG. 9 is a cross-sectional view taken along line 9–9 of FIG. 7.

Referring to the drawings, in FIG. 1 is illustrated a diaper 10 having a top facing sheet 11. The facing sheet 11 may be formed of any of the conventional materials used as the facing in disposable diapers. Materials found to be particularly suitable are nonwoven fabrics resin bonded to give the desired wet and dry strength. The facing is readily permeable to liquids so that the same can pass through into the underlying absorbent 12.

A backing sheet 13 is provided, the backing 13 and the facing 11 being secured together around their edges giving a sealed border 14 extending around the periphery of the absorbent 12 which is contained between the facing 11 and the backing 13. The absorbent 12 is formed of a sheet of hydrophilic polyurethane foam having a thickness of about ¼ inch. The backing 13, which acts primarily to support the absorbent 12 may be of fabric either woven or nonwoven as long as it has sufficient tensile strength and resistance to stretch when wet to support the absorbent 12 after the same has become saturated. In the preferred practice the backing is moisture impervious and formed of flexible water impervious film such as polyethylene, either in free form or as a laminate to other flexible sheet material such as paper or fabric.

By sealing the edges of the facing 11 and backing 13 together around the edges of the absorbent 12, the hydrophilic foam sheet comprising the absorbent is contained within the diaper construction and prevented from expanding laterally beyond the edges of the facing 11 and backing 13 when the absorbent 12 is wetted. If the hydrophilic foam sheet comprising the absorbent 12 were not contained within the facing and backing the expansion of the same would cause the hydrophilic foam polymer sheet to extend well beyond the edges of the absorbent pad 10.

Although the absorbent hydrophilic foam sheets have excellent water-capacity and water-holding characteristics, it is found that the spreading of fluids therethrough in a vertical plane can be substantially improved if there is placed in contact with the absorbent foam sheet a sheet or sheets of creped cellulose wadding with the direction of crepe running in the direction in which it might be anticipated a vertical lift of fluids would be desired. Thus, where the absorbent pad of FIG. 1 is to be used for a diaper, it is desirable to include a sheet or sheets of cellulose crepe wadding in contact with the hydrophilic foam sheet with the direction of crepe running in the longitudinal direction of the diaper. This aids in spreading the fluid lengthwise of the diaper particularly when the diaper is being worn and the child is in an upright position.

In FIG. 3 is illustrated an absorbent pad in which the absorbent 12 is formed of a single sheet 15 of hydrophilic foam polymer and crepe cellulose wadding 16. The creped cellulose wadding 16 is placed between the facing sheet 11 and the hydrophilic foam polymer sheet 15. Except for the difference in the manner of constructing the absorbent 12 the absorbent pad of FIG. 3 is similar to that of FIG. 1.

If a plurality of crepe cellulose wadding sheets are employed and a single sheet of polyurethane foam is used, it is preferred that the sheet of polyurethane foam be sandwiched between sheets of the crepe cellulose wadding. Should, however, it be decided to use two or more sheets of the polyurethane foam, then the preferred practice is to place the sheets of creped cellulose wadding with the creped cellulose wadding sheet between the hydrophilic foam sheets. Diapers having such constructions are illustrated in FIGS. 4 through 6. The diapers illustrated in FIGS. 4 through 6 have essentially the same general construction as that of the diaper of FIG. 1 differing solely in the manner of constructing the absorbent 12. In FIG. 3, as previously indicated, one or more sheets of cellulose crepe tissue are placed between the facing 11 and the hydrophilic foam sheet 15 the crepe of the cellulose crepe tissue extending in the lengthwise direction of the diaper. In FIG. 4 the absorbent 12 of the diaper comprises a sheet of hydrophilic foam 17 placed between two layers 18 and 19 of cellulose crepe tissue with the crepe of tissue layer 18 running at right angles to that of the direction of crepe in tissue layer 19. In FIG. 5 a still further construction is illustrated in which cellulose crepe tissue 20 is placed between two sheets 21 and 22 of hydrophilic foam polymer, the crepe of the cellulose crepe tissue 20 running in the lengthwise direction of the diaper.

In FIG. 6 the absorbent 12 of the diaper is composed of three sheets 23, 24, and 25 of hydrophilic foam with cellulose crepe tissue 26 and 27 placed therebetween.

The center hydrophilic foam sheet 24 is formed of a less resilient foam polymer than the two outer sheets 23 and 25, the two outer hydrophilic foam polymer sheets giving to the diaper its softness and desirable feel while in the dry state. In the construction shown the center sheet 24 is formed of cellulose acetate foam which has excellent absorption properties and increases substantially in softness and resiliency when wet. The outer sheets 23 and 25 are formed of soft, highly resilient hydrophilic polyurethane foam.

In FIGS. 7 through 9 is illustrated an absorbent pad 28 utilizing a somewhat different method of restraining the absorbent polymer foam sheet contained therein as the primary absorbent. Referring to FIGS. 7 through 9 the facing 29 is longer than the absorbent 30 when the absorbent is dry and the backing 31 is wider than the dry absorbent 30. The ends 32 and 33 of the facing 29 are wrapped around the ends of backing he absorbent 30 and secured to the absorbent 30 as best illustrated in FIG. 9. Also, the extending edges 34 and 35 of the backing 31 are wrapped around the sides of the absorbent 30 and secured to the facing 29 as best illustrated in FIG. 8. The absorbent 30 is thus restrained within the facing 29 and backing 31 and prevented from expanding beyond the confines of the absorbent pad 28 when the same has become wetted. The facing 29 and backing 31 are made of materials similar to those described for the absorbent pads of FIGS. 1 through 6. The absorbent 30 of pad 28 is formed of a sheet 36 of hydrophilic polymer foam with crepe cellulose tissue 37 placed between the facing 29 and polymer foam sheet 36.

With the polyurethane foam sheets being the primary absorbent as, for example, in the constructions described, it is found that even though the sheets of crepe cellulose wadding may tear or tend to shred, such tearing of shredding is substantially reduced and any uncomfortableness with respect to the same is substantially eliminated due to the cushioning effect of the hydrophilic foam sheet.

Although certain embodiments have been used to describe the practice of the present invention, the invention is not to be limited to these embodiments solely but is to be limited only as indicated by the appended claims.

I claim:

1. An absorbent pad comprising a flexible moisture permeable facing, a flexible backing and hydrophilic polymer foam sheet contained between said facing and backing, said foam sheet being enclosed around its edges to prevent lateral extension beyond the edges of said pad when wet, and a creped sheet of cellulosic fibers in contact with at least one surface of said hydrophilic polymer foam sheet.

2. An absorbent pad comprising a flexible moisture permeable facing, a flexible backing and hydrophilic polymer foam sheet contained between said facing and said backing, said hydrophilic polymer foam sheet being enclosed around its edges to prevent lateral extension beyond the edges of said pad when wet, and a creped sheet of cellulosic fibers in contact with at least one surface of said hydrophilic polymer foam with the direction of crepe running in the lengthwise direction of said pad.

3. An absorbent pad comprising a flexible moisture permeable facing, a flexible backing and hydrophilic polymer foam sheet contained between said facing and said backing, said hydrophilic polymer foam sheet being enclosed around its edges to prevent lateral extension beyond the edges of said pad when wet, and a creped sheet of cellulosic fibers in contact with at least one surface of said hydrophilic polymer foam with the direction of crepe running in the lengthwise direction of said pad, there being a crepe sheet of cellulosic fibers on the surface of said hydrophilic polymer foam sheet nearest to said facing.

4. An absorbent pad comprising a flexible moisture permeable facing, a flexible backing and hydrophilic polymer foam sheet contained between said facing and said backing, said hydrophilic polymer foam sheet being enclosed around its edges to prevent lateral extension beyond the edges of said pad when wet, and a creped sheet of cellulosic fibers in contact with at least one surface of said hydrophilic polymer foam with the direction of crepe running in the lengthwise direction of said pad, there being a crepe sheet of cellulosic fibers between the facing and said hydrophilic polymer foam sheet and between the backing and said hydrophilic polymer foam sheet with the direction of crepe in said crepe sheet adjacent said facing being substantially at right angles to the direction of crepe in said crepe sheet adjacent said backing.

5. An absorbent pad comprising a flexible moisture permeable facing, a flexible backing and hydrophilic polymer foam sheet contained between said facing and said backing, said hydrophilic polymer foam sheet being enclosed around its edges to prevent lateral extension beyond the edges of said pad when wet, and a creped sheet of cellulosic fibers in contact with at least one surface of said hydrophilic polymer foam with the direction of crepe running in the lengthwise direction of said pad, said crepe sheet of cellulosic fibers being positioned between sheets of said hydrophilic foam.

6. An absorbent pad comprising a flexible moisture permeable facing, a flexible backing and hydrophilic polymer foam sheet contained between said facing and said backing, said hydrophilic polymer foam sheet being enclosed around its edges to prevent lateral extension beyond the edges of said pad when wet, said hydrophilic foam sheet being formed of a plurality of sheets of hydrophilic polymer foam, at least one of said sheets of hydrophilic polymer foam having a softness in the dry state less than the softness of said other hydrophilic polymer foam.

7. An absorbent pad comprising a flexible moisture permeable facing, a flexible backing and hydrophilic polymer foam sheet contained between said facing and said backing, said hydrophilic polymer foam sheet being enclosed around its edges to prevent lateral extension beyond the edges of said pad when wet, said hydrophilic foam sheet being formed of a plurality of sheets of hydrophilic polymer foam, at least one of said sheets of hydrophilic polymer foam having a softness in the dry state less than the softness of said other hydrophilic polymer foam, said sheet of hydrophilic polymer foam of lesser softness being positioned between sheets of hydrophilic polymer foam of greater softness.

8. An absorbent pad comprising a flexible moisture permeable facing, a flexible backing and hydrophilic polymer foam sheet contained between said facing and said backing, said hydrophilic polymer foam sheet being enclosed around its edges to prevent lateral extension beyond the edges of said pad when wet, and a sheet of cellulosic fibers in contact with at least one surface of said hydrophilic polymer foam.