April 29, 1969 R. PALACIOS 3,441,271

PLANETARY EXERCISER

Filed Feb. 23, 1967

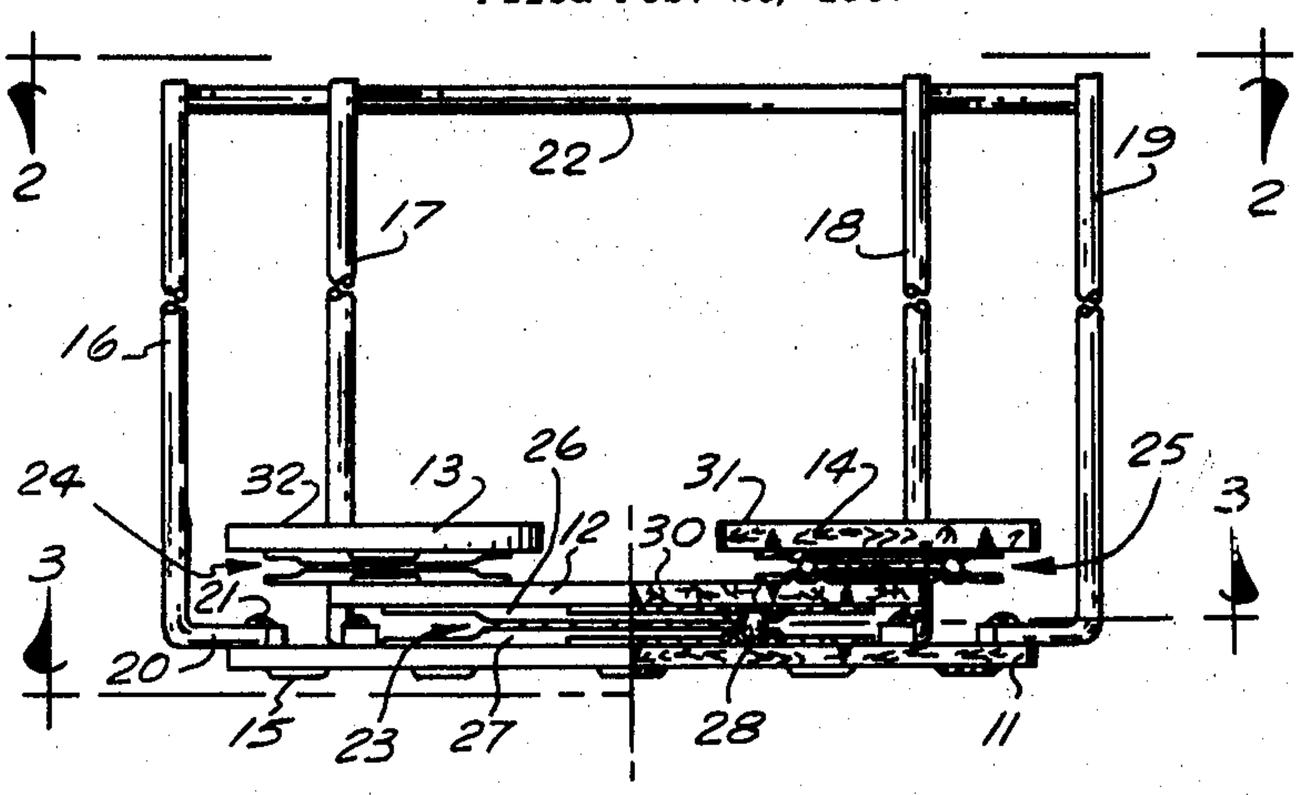

FIG. 1

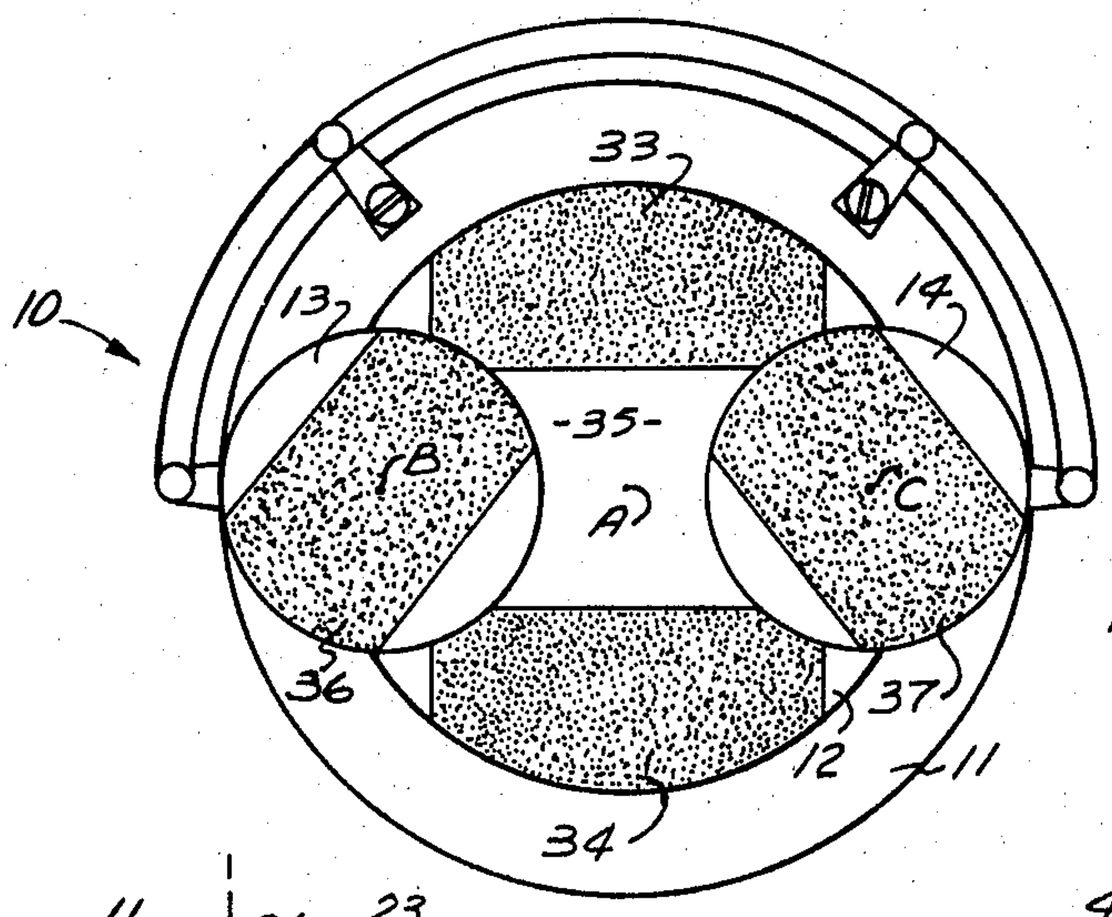

FIG. 2

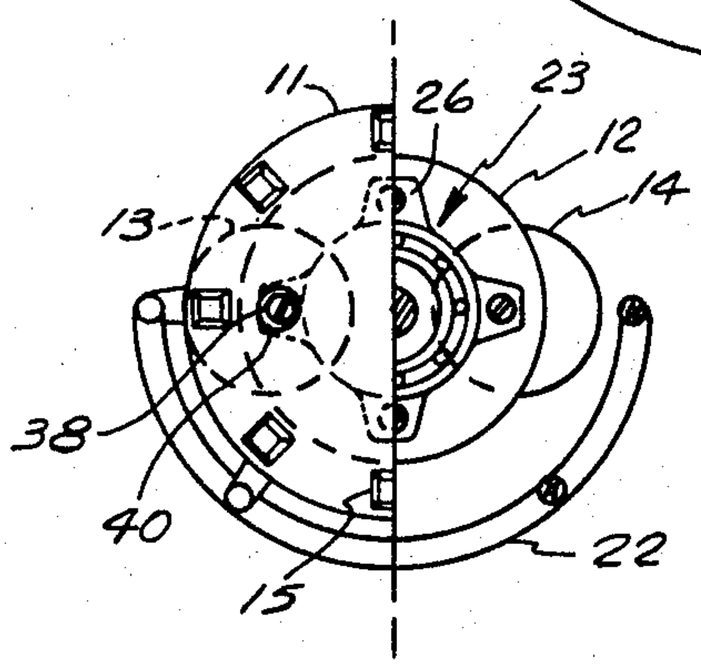

FIG. 3

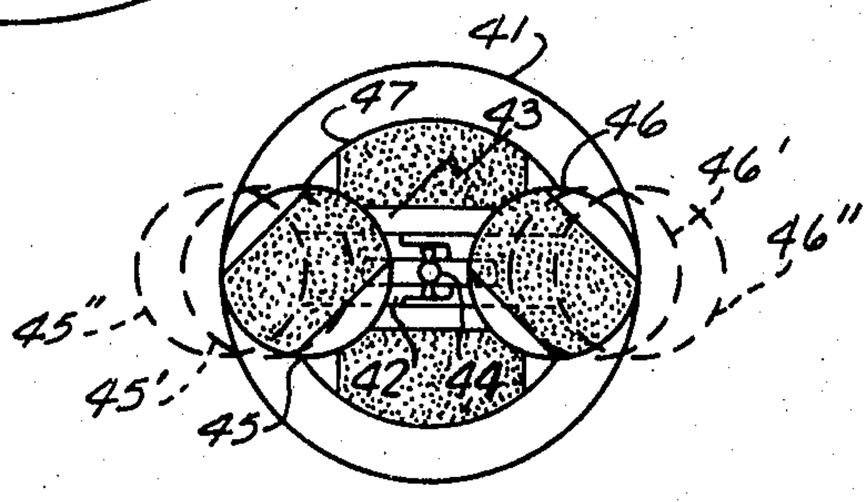

FIG. 4

INVENTOR.
RICHARD PALACIOS
BY Roger A. Marre

United States Patent Office

3,441,271

Patented Apr. 29, 1969

3,441,271

PLANETARY EXERCISER

Richard Palacios, 691 Arden Ave.,
Glendale, Calif. 91202

Filed Feb. 23, 1967, Ser. No. 618,044
Int. Cl. A63b *23/02, 23/04*
U.S. Cl. 272—33 10 Claims

ABSTRACT OF THE DISCLOSURE

An exerciser is disclosed having a base for rotatably mounting a major platform by means of an annular roller bearing wherein opposite portions of the exposed surface of the major platform are adapted to receive and support the feet of a user. A pair of minor platforms are rotatably carried on opposite portions of the major platform by means of ball bearings and has foot receiving and supporting areas disposed on the exposed central surface portion of each of the minor platforms. Thereby, a user may stand on either the major platform or the pair of minor platforms to exercise various muscular portions of his body by twisting or torsional movements effecting rotation of all of the platforms in combination or any of the respective platforms individually.

BACKGROUND OF THE INVENTION

Field of the invention

This invention relates to physical exercising devices and, more particularly, to a novel device adapted to not only exercise the muscles of the hips and body trunk but one which is effective to exercise and strengthen, without great muscular effort, the muscles of the thighs and legs.

Description of the prior art

In general, the concept of exercise, whether for developing the physique or for the purpose of weight reduction, involves expending a substantial amount of time and physical effort to obtain observable results. Furthermore, such exercise or weight reduction frequently requires equipment that is rather expensive and beyond the means of many who desire to exercise or reduce. Many portable exercisers have been employed in the past, but these have usually required the use of weights or resilient members such as springs or elastic cords, and in addition, have usually been directed to developing the arms and chest of the user without regard for the rest of the torso and legs. Many of these have required mounting on a wall, while nearly all of them have required a considerable space in which to use them properly.

Other attempts have been directed towards providing an exercising device which is capable of exercising the hips, thighs, legs and abdomen of the user by providing a platform freely swiveled on a base supported on the floor. A person, in using this device, freely swivels the hips and legs without having to act against the restraining force of springs or other restraining means whereby effective exercise may be obtained with a minimum of physical exertion and requiring but relatively short periods of time to obtain beneficial results. Several such swivelled or rotatable platforms are disclosed in U.S. Letters Patent 3,063,714; 3,100,639; and 2,351,293.

However, problems and difficulties have been encountered with such conventional exercising platforms which are distinguished from each other by their provision of different means for frictionally retarding the rotation of the platform of the exerciser whereby a greater effort must be expended by the person using the device in order to rotate the platform. This factor increases the rigor of the exercise and the development of the muscles used in

it. However, the retardation factor mentioned is constantly in opposition to the effort applied by the muscles of the body in rotating the platform and is as great toward the end of a body twisting movement as at the beginning of this action. Thus, the ratio of muscular capacity to the retarding force resisting the twisting effort, greatly diminishes in the final portion of each twisting movement. Consequently, this action had the tendency of tightening the muscles at the point of maximum contraction.

Perhaps one of the major difficulties encountered with prior rotating platform exercising devices resides in the fact that although basically the hips and thigh muscles are greatly exercised in the use of the device, a great many muscles of the legs are not exercised. The limiting factor of prior art exercisers stems from the employment of a single rotary disc or platform on which the user stands and therefore the exercising device is limited only to the exercise of a relatively few number of muscles.

SUMMARY OF THE INVENTION

Accordingly, the difficulties and problems encountered with conventional rotating platform exercising devices are obviated by the present invention which provides a novel planetary exerciser that provides alternate rotating platform means on which the user may selectively stand so as to primarily exercise the hip and thigh muscles or primarily the leg and ankle muscles as well.

In one embodiment of the invention, the novel planetary exerciser provides a base on which a major platform is rotatably mounted while providing a pair of minor platforms rotatably mounted on the major platform. The primary or major platform is rotatably carried on the base by means of a bearing having a relatively large diameter such that the platform will carry the weight of a person exercising. The upper surface of the primary platform is provided with a pair of areas on which is placed sufficient frictional material so as to prevent the person's feet from sliding while the device is in use. The frictional material is applied to the upper surface at opposite edge marginal portions of the primary platform which are disposed on opposite sides of the central vertical axis of the platform. Rotatably mounted on opposite edge marginal regions of the platform, there are provided a pair of rotatable minor platforms which are substantially smaller in diameter than the single primary platform on which they are carried. Each of the minor platforms includes a band of frictional material carried on the surface thereof so that when a person exercising uses these latter platforms, his feet will be stabilized and slippage prevented. If desired, a railing means may be provided which is fixed on the base and extends upwardly therefrom so that a person using the device may use the railing means for a hand support.

By employing only the primary platform, the user may readily exercise hip, back and thigh muscles while when the user is standing on the pair of minor platforms, the user may exercise the leg and ankle muscles as well. Consequently, a greater variety of muscular activity can be experienced by the user than can be otherwise achieved when employing conventional devices.

Therefore, it is a primary object of the present invention to provide a novel planetary exercising device which permits the user to exercise muscles associated with major portions of his body by selectively choosing to stand on a primary platform or on a pair of minor platforms.

Another object of the present invention is to provide a novel rotary exerciser of a planetary type wherein the user may readily stand on a pair of rotating discs that may be individually rotated while at the same time effect-

ing the rotation of a major platfom on which the pair of minor platforms are carried so that a variety of body muscles can be simultaneously exercised.

Still another object of the present invention is to provide a novel planetary exerciser which may be readily adjusted to accommodate a desired degree of strain to be encountered by the person using the device.

Still another object of the present invention is to provide a novel exercising and/or reducing device incorporating a system of rotating discs or platforms so as to provide a planetary motion and which requires but little effort every day for a person to obtain noticeable beneficial results both in strengthening the muscles of the body and in reducing the waistline.

Yet another object of the present invention is to provide a novel planetary exerciser incorporating a pair of rotatable discs on a primary rotatable platform wherein the discs and platform are provided with frictional material sufficient to prevent slippage of a person's feet standing on either the discs or the platform and wherein an individual standing on the discs translates body twisting movements into planetary movement of all the discs and platform.

BRIEF DESCRIPTION OF THE DRAWING

The features of the present invention which are believed to be novel are set forth wtih particularity in the appended claims. The present invention, both as to its organization and manner of operation, together with further objects and advantages thereof, may best be understood by reference to the following description, taken in connection with the accompanying drawings, in which:

FIGURE 1 is a side elevational view, partially in section, of the planetary exerciser incorporating the present invention;

FIGURE 2 is a top plan view of the exerciser as illustrated in FIGURE 1 as taken in the direction of arrows **2—2** thereof;

FIGURE 3 is a reduced sectional view of the exerciser as taken in the direction of arrows **3—3** of FIGURE 1 and illustrating a portion thereof broken away to expose the major rotary bearing for the major platform; and

FIGURE 4 is a top plan view of another embodiment of the present invention including means laterally extending the distance between the minor rotary platforms.

DESCRIPTION OF THE PREFERRED EMBODIMENT

Referring to FIGURES 1 and 2, a novel planetary exerciser in accordance with the present invention is illustrated in the general direction of arrow **10** and comprises, in general, a base plate **11** circular in outside contour upon which is swivelled a rotating major platform **12**. Rotatably mounted near opposite edge marginal regions of the rotating major platform **12**, there is rotatably mounted a pair of minor discs or platforms **13** and **14**, respectively. To prevent the exerciser from slipping or marring floors on which the device is supported, a plurality of floor surface engaging buttons, such as button **15**, are provided which are secured to the underside of the base **11**. Preferably, each of the plurality of buttons are composed of natural or compounded synthetic rubber, non-skid plastic or the like and the plurality of buttons are arranged in an annular manner in close proximity to the peripheral edge of the base **11** for contact with the floor surface.

A hand rail arrangement is provided which is adapted to be grasped by the user for gaining support and stability while the exerciser is being used. The hand rail arrangement is employed primarily by a novice or beginners until the rotary movement, body gyrations and body maneuvering are experienced, at which time the user no longer will need the use of hand rails. The hand rail arrangement includes upright stanchions **16–19** which

are angled at their lower end for ready attachment to the upper surface of the base plate **11**. The angled portion of each stanchion is represented by the numeral **20** in connection with stanchion **16** and secured to the base plate **11** by means of a suitable fastener **21**. The upper end of the stanchions merge with a hand rail **22** that may be readily grasped by the user. The fasteners **21** may be easily removed so that the hand rail arrangement may be separated from the exerciser when the user has attained a degree of competency with the device when he no longer requires the hand rail. However, it is to be understood that the user may readily support himself on the exerciser without the hand rail by such means as attaching a small hand grip bar to a wall, by using a towel rack or by locating the exerciser on the floor in the vicinity of a doorway so that the user's hands can be placed on the opposite door frames for stability and support.

Each of the rotatable platforms **12**, **13** and **14** are mounted to their respective supporting members by means of annular bearings **23**, **24** and **25** respectively. The bearings **24** and **25** are smaller in diameter than the bearing **23**; however, all of the bearings are constructed in substantially the same manner. Therefore, description of the bearings will be related to bearing **23** which is illustrated as comprising an upper plate **26** secured to the underside of rotating platform **12** and a lower plate **27** secured to the upper surface of base plate **11**. The upper plate **26** includes a downwardly opening annular raceway for receiving a plurality of ball bearings, such as ball bearing **28**. Each of the ball bearings rest in an annular depression or upwardly opening raceway formed in the lower plate **27**. The annular raceways are provided with individual depressions (not shown) for receiving each of the plurality of ball bearings, such that the ball bearings are spaced apart in an annular fashion with respect to the upper and lower raceways whereby the raceways are complementary. By this assembly, the rotating platform **12** is separated from the base plate and supported on the concentrically arranged ball bearings **28** for free rotation in either clockwise or counterclockwise directions. In a similar manner, the minor platforms **13** and **14** are separated from the major platform **12** by means of bearings **24** and **25** which have an axis of rotation offset from the central vertical axis of rotation of platform **12**. However, when the minor platforms **13** and **14** are rotated by twisting action of the user, the platform **12** will rotate and the platforms **13** and **14** will move in an annular path about the center rotational axis of platform **12**.

Each of the rotating platforms **12**, **13** and **14** has a substantially flat loadbearing surface represented by numerals **30**, **31** and **32**, respectively, encompassed or defined by a peripheral edge defining the circular contour of each platform. Platform **12** includes opposite edge marginal regions on which a non-slip frictional composition pad or mat **33** and **34** is secured. This arrangement is more clearly illustrated in FIGURE 2 in which the pads **33** and **34** are represented by a sheet having a gummed or tacky backing which readily secures to the opposite edge marginal regions of the platform **12**. The pads are spaced apart in fixed relationship so that a central area **35** is defined therebetween. The vertical rotating axis of major platform **12** is indicated by letter "A" about which the platforms **13** and **14** rotate. The axis of rotation for minor platform **13** is indicated by letter "B" while the axis of rotation for platform **14** is indicated by by letter "C." Each of the minor platforms includes a non-slip frictional composition pad **36** and **37**, respectively, which is identical to the pads **33** and **34**. However, pads **36** and **37** are arranged to be secured on each of the minor platforms across a central region thereof. In this fashion, a person may readily place his feet on pads **33** and **34** so that only the major platform **12** may be rotated or the person using the exerciser may place

his feet on pads **36** and **37** to effect rotation of the minor platforms **13** and **14** as well as the major platform **12**.

It is to be particularly noted that the base plate **11** is of greater diameter than the primary rotatable platform **12** so that an annular edge marginal region of the base plate **11** extends beyond the circular periphery of the platform **12**. By this provision, adequate support for the exerciser is achieved and any tendency of the exerciser to tip or turn over due to the user becoming unbalanced thereon is avoided. Therefore, the exerciser of the present invention is extremely stable and is particularly safe.

Referring now in detail to FIGURE 3, it can be seen that the bearing **23** is secured to the underside of platform **12** via a plurality of fasteners, such as fastener **38**. Each of the plates which make up the bearings **23**, **24** and **25** are provided with outwardly extending flanges through which the fasteners extend to secure the plates to their respective supporting surfaces. To effect securement of the fasteners associated with plate **26** to the underside of platform **12**, an access aperture **40** is formed through the base plate **11** whereby the fastener **38** may be inserted through the aperture and tightened down to secure plate **26** to platform **12**. Next, the platform **12** may be rotated so that the aperture **40** is registered with another flange of the plate **26** and another fastener inserted through the aperture in securement with the underside of platform **12**. This procedure is carried out until all of the fasteners have been installed to retain plate **26** to the underside of platform **12**. This procedure and the provision for an aperture is not necessary with respect to bearings **24** and **25** inasmuch as a portion of the latter bearings project outwardly from the periphery of the platform **12** so that ready access is had to secure fasteners associated with bearings **24** and **25** to the minor platforms **13** and **14**. In a similar fashion, it is to be noted that a substantial portion of each platform **13** and **14** extends beyond the peripheral edge of the platform **12**.

Referring now to FIGURE 4, another embodiment of the present invention is shown which includes a base plate member **41** and a major rotatable platform **42** which are similar to the base **11** and platform **12** illustrated in the embodiment of FIGURES 1 and 2. However, the exerciser of FIGURES 1 and 2 has been modified to the extent that the central portion **35** of major platform **12** is provided with a pair of registered members **42** and **43** that are slidably carried in the central portion of disc or platform **47** in a tongue and groove arrangement so as to be slidably extendable outwardly in response to release of a fastener **44**. By extending the members **42** and **43** outwardly, the minor platforms **45** and **46** carried on the outwardly projecting ends of each member may be spaced apart to a desired distance. Various distances of separation are indicated in FIGURE 4 in broken lines for the platforms **45** and **46** and are represented by numerals **45'** and **45''** and numerals **46'** and **46''**. Construction in fashion permits the user to adjust the distance between the minor platforms so as to require more or less vigor in effecting the rotation of the platforms during a given exercise. In this manner, selected muscles of the legs may be exercised as well as the effort necessary to rotate the platform.

The operation of the novel exercising device will be described in connection with the embodiment illustrated in FIGURES 1–3, wherein the planetary exerciser is placed on the floor or other firm supporting surface. The person who is exercising places his feet on the mats or pads **33** and **34** of the major platform **12**. The person may use the hand rail for auxiliary support if preferred. The person holds his shoulders and chest relatively stationary and rotates the hips, legs and feet in an oscillatory movement with the platform. At first, one may have to hold onto a stationary object to keep one's balance, but as one becomes more proficient, the support will not be required. The arc of rotation of the platform **12** is gradually increased from approximately 120° to 180° and with but

little practice, one may exercise in various other positions, such as upright or with the knees or hips bent, until one is in a substantially sitting or squatting position.

To obtain full muscular activity through the use of the exerciser, the person who is exercising may firmly plant his feet on the mats or pads **36** and **37** carried on minor discs or platforms **13** and **14** and, by rotating the hips and legs and feet in an oscillatory movement, not only will platforms **13** and **14** rotate but platform **12** will rotate as well. It has been found that by employing the planetary rotational movement of the combined discs by the user, more muscular activity is experienced in the user's legs than can otherwise be experienced by using only the disc **12**. The minor platforms **13** and **14** amy be rotated either simuutaneously in a clockwise direction or simultaneously in a counterclockwise direction or may be rotated in contra-rotational directions. In all of these events, major platform **12** is free to rotate in either a clockwise or counterclockwise direction depending upon the emphasis of the body movements and oscillations.

Therefore, it can be seen that the planetary exerciser of the present invention permits a person to achieve exercise and strengthening, without great physical effort, of the muscles of the lower back, hips, thighs, legs and ankle as well as the muscles of the abdomen. The device or exerciser is relatively simple in construction and inexpensive to manufacture and may be adapted for home use. Further, surprising results are obtained from the use of this exerciser in measurement reduction, especially around the waist. Unlike prior exercising devices which require substantial physical effort, exercising on the present invention is great amusement for the user and in operation is so simple that even children can master it in a short period of time.

While particular embodiments of the present invention have been shown and described, it will be obvious to those skilled in the art that changes and modifications may be made without departing from this invention in its broader aspects, and, therefore, the aim in the appended claims is to cover all such changes and modifications as fall within the true spirit and scope of this invention.

What is claimed is:

1. In an exerciser adapted to provide planetary movement, the combination comprising:

a horizontal major platform of appropriate size to allow a person to stand uprightly thereon;

a base plate, means for rotatably supporting said major platform for free and uninhibited rotation thereof about a centrally located vertical axis of said base plate; and

a pair of minor platforms rotatably supported on said major platform for free and uninhibited rotation about vertical axes separted by said major platform vertical axis and located approximately 180° apart.

2. The invention as defined in claim **1** wherein

said major platform is adapted to receive and support both feet of an individual; and

each of said minor platforms is adapted to receive and support one foot of the individual wherein the individual is allowed a wide latitude of choice in positioning his feet on either said major platform or on said pair of minor platforms to support himself thereon with his center of gravity directly over said central vertical axis of said major platform in preparation for rotating said major platform by twisting his body.

3. The invention as defined in claim **2** wherein

said major platform includes a pair of non-slip surface areas covering portions of said major platform disposed between said central vertical axis and the peripheral edge of said major platform and said pair of non-slip surface areas being further disposed disposed substantially between said pair of minor platforms.

4. The invention as defined in claim 3 wherein
each of said minor platforms includes a non-slip surface area disposed across the control portion thereof.
5. The invention as defined in claim 4 wherein
each of said aforementioned platforms is rotatably supported on a ball bearing means having an upper and a lower raceway formed to movably retain a plurality of ball bearings.
6. The invention as defined in claim 5 wherein
said base plate has a diameter greater in dimension than the diameter of said major platform; and
an access aperture formed in said base plate adapted to be registered with selected locations of said ball bearing means associated with said major platform to accommodate the securement therebetween.
7. The invention as defined in claim 6 including
a hand rail arrangement secured to an annular edge marginal region of said base plate and upwardly projecting from the surface thereof about the periphery of said major platform to a location substantially in the vicinity of the individual's hips.
8. The invention as defined in claim 2 wherein
said base plate and said major platform are concentric with respect to said central vertical axis; and wherein
said minor platform vertical axes are offset from said central vertical axis but are adapted to follow an annular path concentric therewith in response to rotation of said major platform.

9. The invention as defined in claim 1 wherein
said major platform includes a pair of slidable members arranged in end-to-end relationship across the central portion thereof and adapted to rotatably support each of said minor platforms on the outer end of each of said members respectively whereby the distance between said pair of minor platforms may be adjusted to a desired dimension.
10. The invention as defined in claim 9 including
releasable fastener means securing said pair of slidable members together and to said major platform.

References Cited

UNITED STATES PATENTS

2,206,902	7/1940	Kost	272—57
3,384,369	5/1968	Rumell	272—69

ANTON O. OECHSLE, *Primary Examiner.*

RICHARD W. DIAZ JR., *Assistant Examiner.*

U.S. Cl. X.R.

272—57