March 18, 1969 R. H. DOYLE 3,434,026

ELECTRICALLY OPERATED RECIPROCATING TOOL

Filed Dec. 12, 1966

Fig. 1

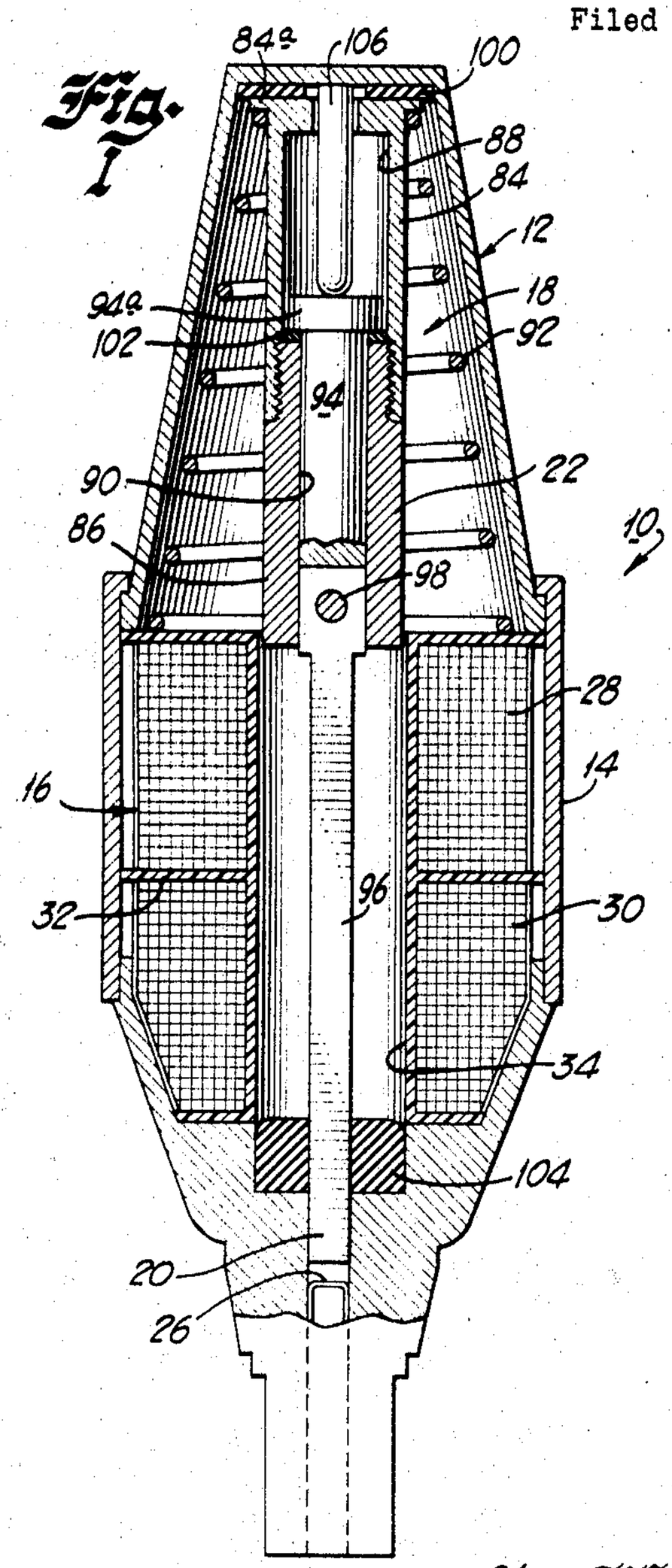

Fig. 2

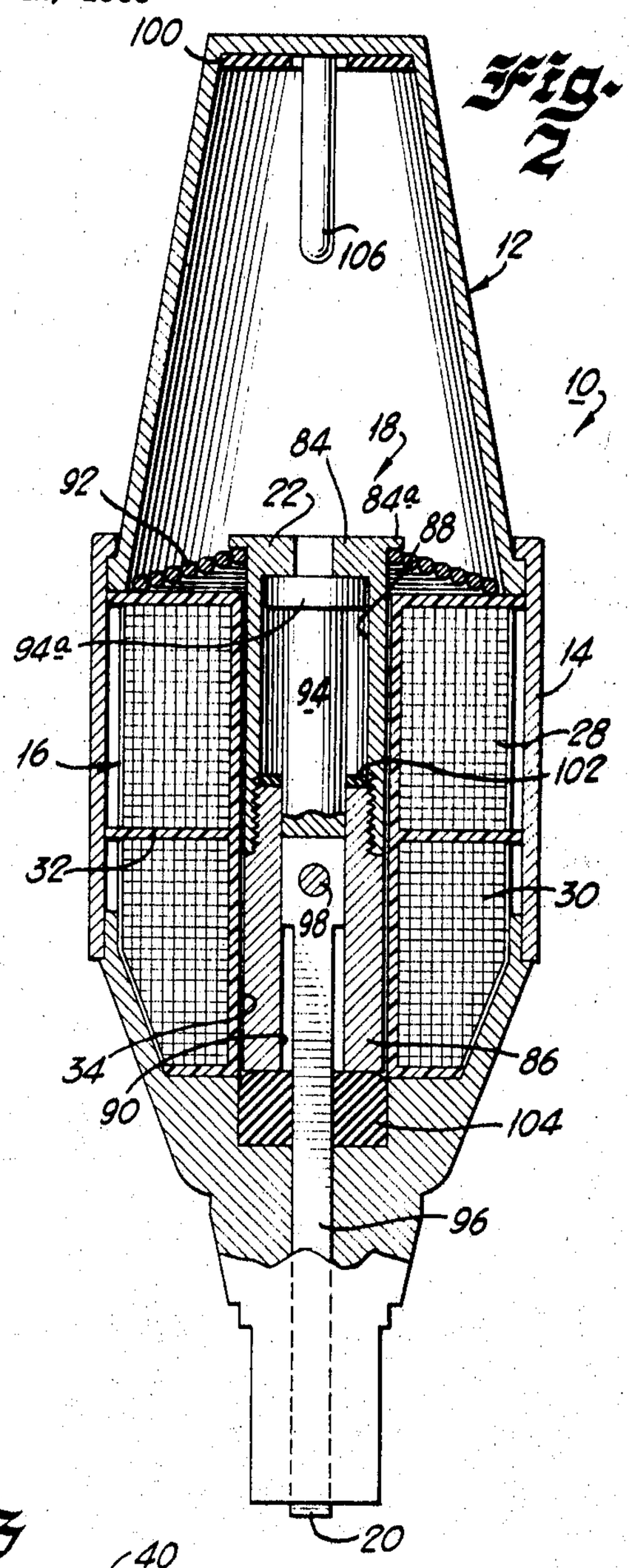

Fig. 3

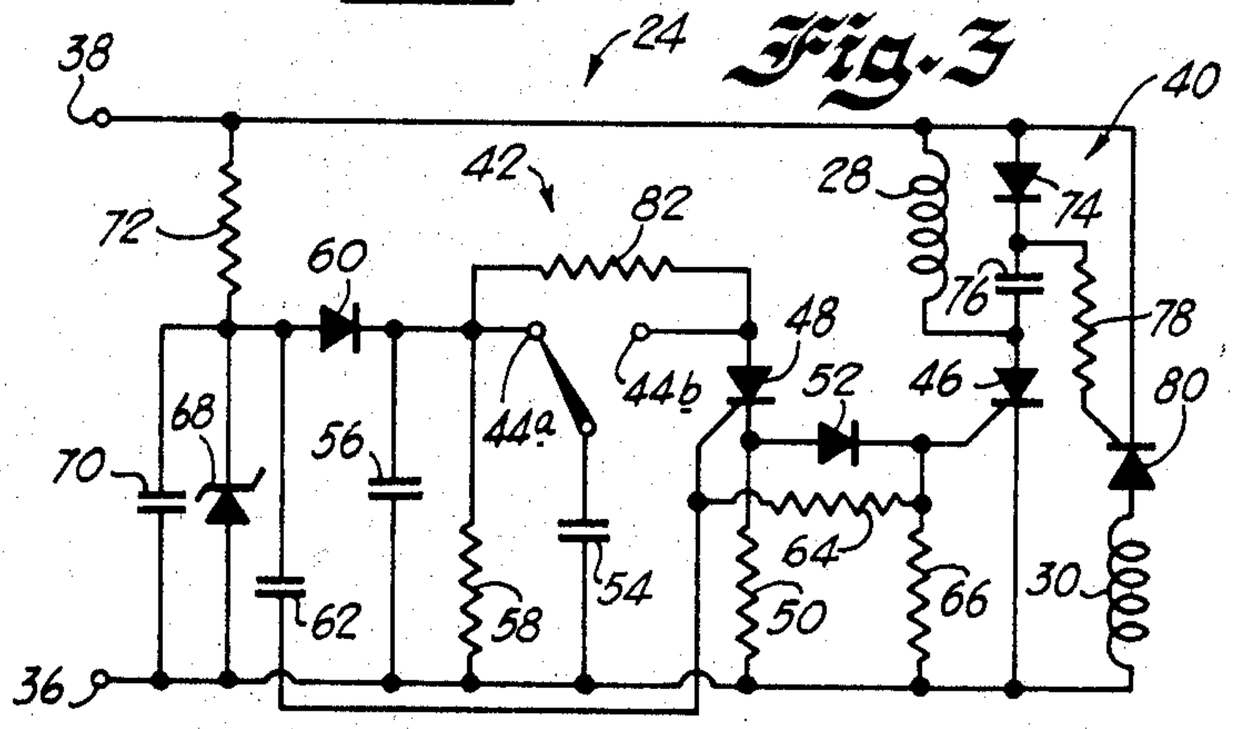

INVENTOR
RICHARD H. DOYLE
by
Mason, Kolehmainen, Rathburn and Wyss
ATTORNEYS

United States Patent Office

3,434,026

Patented Mar. 18, 1969

3,434,026

ELECTRICALLY OPERATED RECIPROCATING TOOL

Richard H. Doyle, Mount Prospect, Ill., assignor to Fastener Corporation, Franklin Park, Ill., a corporation of Illinois

Filed Dec. 12, 1966, Ser. No. 600,982

U.S. Cl. 318—125 12 Claims

Int. Cl. H02k *33/12*

The present invention relates to a tool, and more particularly to an improved electrically operated portable tool of the type having a single power stroke.

Portable tools are widely used for many material working operations and it is important that such tools be compact and light enough for easy and convenient manipulation, while being powerful enough to perform the desired operation. It is desirable that such a tool be convenient to use in a variety of locations, and for this reason an electrically operated tool may be preferred. In many applications, a tool with a single power stroke is preferred because of its effectiveness and speed.

One tool which satisfies these diverse requirements is the tool disclosed and claimed in U.S. Patent No. 3,179,866 of Richard H. Doyle, LeRoy N. Hermann and Joseph S. Naber. The tool disclosed in that patent includes a work engaging element having a magnetic portion disposed adjacent an operating winding. A control circuit is disposed in the tool housing and is effective to energize the operating winding during the first complete half cycle of the alternating current potential following actuation of a control circuit by a switch. Energization of the operating winding results in movement of the magnetic portion and work engaging element through a power stroke.

Although the tool shown in the above mentioned patent is highly satisfactory for many material working operations, it would be desirable to provide an even more powerful single stroke tool, without increasing the size and weight of the tool to the point where its portability is impaired. One possibility would be to improve the efficiency of the tool by using an increased amount of magnetic material associated with the work engaging element, but this would increase the weight and size of the tool. Another problem is that the electrical energy available to the tool is limited by the maximum current of 90 amps. or so available in the 110–120 volt lines normally used commercially. The use of energy storage devices, such as capacitors, for providing more power is not feasible because the size of the conductors connected to the tool becomes too large for convenient portability.

In many fastener driving operations, a fastener is first sheared from a strip of fasteners, and then is driven, both the shearing and the driving being accomplished by a moving armature accelerated by the operating winding. The force required to shear the staple may be large. For example, approximately 50 pounds of force is required to shear a one and one-half inch, 16 gauge staple. Accordingly, it would be desirable to provide a compact portable tool in which ample momentum is imparted to the armature by acceleration of the armature before shearing the staple, without substantially increasing the overall armature stroke and tool size.

Accordingly, it is an object of the present invention to provide an improved electrically operated portable tool.

Another object is to provide an improved portable tool of the single stroke type which is compact in size but which is capable of delivering a large amount of power.

A further object is to provide a tool including an improved winding arrangement and an improved control circuit for increasing the power delivered in the power stroke of the tool.

Another object is to provide an improved electrically

operated tool provided with a novel armature assembly for achieving an increased armature displacement or stroke without a substantial increase in the size of the tool, and without the necessity for increasing the displacement or stroke of the work engaging element.

A further object is to provide an improved armature assembly in which the initial inertia to be overcome by the magnetic field produced by the winding is reduced.

Another object is to provide a tool in which the armature attains a sufficient velocity easily to shear a fastener, without increasing the size of the tool.

In accordance with these and many other objects and advantages of the invention, one embodiment of the invention comprises a fastener driving tool including a housing within which is arranged a winding structure and an armature assembly mounted for movement adjacent the winding structure. In order to increase the power or energy imparted to the armature assembly during a single stroke, the winding structure includes a pair of windings disposed along the path of movement of the armature assembly and the control circuit includes means for energizing the windings on succeeding half cycles of the alternating current source in a sequence corresponding to the direction of movement of the armature assembly. Thus the armature assembly is accelerated throughout a full cycle of the alternating current potential source, first by one winding and immediately thereafter by another winding, and powerful single stroke is achieved.

In accordance with a feature of the invention, the control circuit includes means for energizing the first winding during a first half cycle of the alternating current source, and means responsive to energization of the first winding for energizing the second winding during the immediately following half cycle. The control circuit includes a first controlled conduction device in series between the first winding and the potential source, and means for applying a control signal to the first controlled conduction device to energize the first winding during one half cycle. A second controlled conduction device is in series with the second winding and the source. A trigger circuit is provided for applying a control signal to the second controlled conduction device in response to energization of the first winding for energizing the second winding during the following half cycle.

The use of more than one winding to achieve a longer period of acceleration of the armature gives rise to a necessity for increased armature displacement, since a longer stroke must be used to take advantage of the full period of time during which the windings are energized. In accordance with a feature of the invention, there is provided a novel armature assembly capable of providing a long armature stroke while keeping the tool compact in size, and without the necessity for a long driver blade stroke. Thus the armature assembly includes a work engaging member, including a driver blade, and a magnetic member movable from a rest position to an operating position to drive the work engaging member through a single power stroke. The magnetic member and the work engaging member are coupled together for limited movement with respect to each other, so that upon energization of the winding the magnetic member moves a distance from the rest position before engaging and driving the work engaging member. This construction also assures that the work engaging member has sufficient momentum to shear the fastener from a strip, and does not require a large housing for movement of the armature.

Many other objects and advantages of the present invention will become apparent from considering the following detailed description in conjunction with the drawing, in which:

FIG. 1 is a partial sectional view through the head por-

tion of a fastener driving tool embodying the present invention;

FIG. 2 is a view similar to FIG. 1 illustrating the fastener driving tool at the end of a power stroke; and

FIG. 3 is a circuit diagram of the control circuit of the tool.

Referring now to the drawing, there are illustrated some portions of an electrically operated fastener driving tool designated by the reference numeral **10**. The fastener driving tool **10**, preferably of the portable type, includes a housing **12** having a handle portion (not shown) and a vertically extending head portion **14** illustrated in section in FIGS. 1 and 2 of the drawing. Adjacent the lower end of the head portion **14** is disposed an electrical winding structure designated as a whole by the reference numeral **16**. An armature assembly **18** is mounted for vertical reciprocating movement adjacent the winding structure **16**, and includes a work engaging portion **20** and a magnetic portion **22** coupled to the work engaging portion **20**. The tool **10** includes a control circuit generally designated as **24** and illustrated in FIG. 3 of the drawing. Preferably, the control circuit **24** may be contained in the handle of the tool **10**. The control circuit **24** serves to energize the winding structure **16** in order to drive the armature assembly **18** downwardly through a single power stroke against a fastener **26** (FIG. 1).

In accordance with a feature of the invention, the electrically operated tool **10** delivers a large amount of power with each single stroke of the armature assembly **18**. The winding structure **16** includes a pair of windings **28** and **30**, and the control circuit **24** serves to energize the windings in sequence during consecutive half cycles of the alternating current supply voltage. As a result, the armature assembly **18** is accelerated throughout a full cycle of the alternating current potential source, and, as a result, approximately twice as much energy is imparted to the armature assembly as would be the case with a half cycle energization period.

Since the armature assembly is accelerated throughout an entire cycle of the alternating current potential source, the distance through which the armature moves, or the armature stroke, is greater than would be required in a half cycle arrangement. In order to keep the tool **10** compact in size for portable use, and to permit a short driver blade stroke, the work engaging portion **20** and the magnetic portion **22** of the armature assembly **18** are coupled for limited movement relative to each other. As a result, the magnetic portion **22** moves through part of its longer stroke before engaging and driving the work engaging portion through a shorter stroke.

Referring now more specifically to the construction of the tool **10**, the two windings **28** and **30** are supported near the lower end of the head portion **14** of the tool on a two-section bobbin **32**. The bobbin **32** includes an axially extending opening **34** in which the armature assembly slidingly reciprocates. The windings **28** and **30** are thus disposed along the path of movement of the armature assembly, with the winding **28** being disposed closer to the top of the head portion **14** than the winding **30**.

Having reference now to FIG. 3 of the drawings, the control circuit **24** of the tool **10** is illustrated. The control circuit **24** is preferably formed on a suitable support and then encapsulated or "potted" in any of the well known compositions therefor. The circuit **24** may be mounted within the housing **12** of the tool **10**, and preferably within the handle which can extend laterally from the illustrated head portion **14** in the manner illustrated in the above mentioned U.S. Patent No. 3,179,866.

The circuit **24** includes a pair of input terminals **36** and **38** adopted for connection to an alternating current potential source as by a flexible conductor, and also includes terminals connected to the windings **28** and **30**. The circuit is operated by a trigger actuated or workpiece engaging switch so that when the switch is operated, the

armature assembly is accelerated through a single power stroke. More specifically, after operation of the switch, the winding **28** is energized during the first half cycle of the desired polarity occurring after operation of the switch. The winding **30** is operated during the immediately following half cycle by a trigger circuit **40** responsive to energization of the coil **28**.

The control circuit **24** includes an operating circuit generally designated as **42** for energizing the winding **28** during the properly polarized half cycle following operation of the control switch, which switch includes a set of normally closed switch contacts **44***a* and a set of normally open switch contacts **44***b*. The opening circuit **42** may be of any suitable type, and may comprise a circuit similar in some respects to the control circuit shown in the pending application of Richard H. Doyle, LeRoy N. Hermann and Joseph S. Naber, Ser. No. 257,677, filed Feb. 11, 1963, which application is assigned to the same assignee as the present invention.

The operating circuit **42** includes a gated unidirectional controlled conduction device **46**, such as a silicon controlled rectifier, having an anode connected to one terminal of the winding **28** and a cathode connected to the supply terminal **36**. When a positive potential is supplied to the anode of the gated rectifier **46** and a trigger signal is applied to the control or gate electrode thereof, the winding **28** is directly connected across the supply terminals **36** and **38** to develop a magnetic field for actuating the aramture assembly **18**.

The gate electrode of the gated rectifier **46** is provided with an operating control signal under the control of a second controlled conduction device **48**, such as a silicon controlled switch. The cathode of the switch **48** is connected to the supply terminal **36** through a resistance element **50** and is coupled to the control electrode of the gated rectifier **46** through a blocking diode **52**. The anode of the switch **48** is connected to the pair of normally open contacts **44***b* of the operating switch. The operating switch is actuated to close the normally open contacts **44***b* and to open the normally closed contacts **44***a* when it is desired to operate the tool **10**.

The normally closed contacts **44***a* connect an energy storing means or storage capacitor **54** to a charging circuit including a capacitor **56** that is shunted by a resistance element **58**. Positive-going half cycles of the alternating current potential from the supply terminals **36** and **38** are continuously supplied through a diode **60** to charge the capacitors **54** and **56**. When the tool **10** is to be operated, the contacts **44***a* are opened and the contacts **44***b* are closed whereupon the storage capacitor **54** is disconnected from its charging circuit and is connected to the anode of the controlled switch **48** so as to provide an operating potential therefor. The energy stored in the capacitor **5 4**is such as to maintain the controlled switch **48** in a conductive condition for a period of time no longer than a full cycle of the alternating current potential source.

In order to synchronize the periods of conduction of the controlled conduction devices **46** and **48** with the potential supplied by the source **14** so as to insure that the potential applied across the rectifier **46** is of a proper polarity, and to insure that the rectifier **46** is fired at the beginning of the half cycle, the control electrode of the silicon controlled switch **48** is connected to a differentiating network including a capacitor **62** and a pair of resistance elements **64** and **66**. The positive-going alternations in the alternating current potential source provide positive-going pulses or spikes at the gate electrode of the silicon controlled switch **48**.

These positive-going pulses are continuously applied to the switch **48** so long as the circuit **24** is connected to an alternating current potential source. However, the device **48** is normally not placed in a conductive condition due to the absence of an operating potential across the anode and cathode of the device. However, during the

first properly poled half cycle following the time at which the contacts **44***b* are closed, the positive-going pulse supplied to the control electrode of the switch **48** places this device in a conductive state so that the storage capacitor **54** is discharged through the resistance element **50**. This provides a positive-going pulse that is forwarded through the diode **52** to the gate electrode of the silicon controlled rectifier **46**. Since the trigger pulse for the device **48** occurs only during positive-going alternations in the potential supplied through the supply terminals, the anode of the device **46** is also at a positive potential with respect to its cathode, and the trigger pulse supplied through the diode **52** places the silicon controlled rectifier **46** in a conductive condition to connect the winding **28** directly across the potential source **14** during the entire half cycle of the proper polarity.

In order to insure stable operation of the rectifier **46** and switch **48**, the resistance element **64** is coupled between the gate electrodes of the devices **46** and **48**. This resistance element provides a feedback signal from the device **46** to the device **48** in order to hold the device **48** in its conductive condition, thereby insuring that the enabling signal to the device **46** is maintained and that the capacitor **54** is fully discharged to prevent multiple firing of the tool **10**.

B+ regulation is provided by means of a Zener diode **68** connected between the supply terminal **36** and the anode of the diode **60**. In addition, a capacitor **70** and resistance element **72** are provided for shifting the phase of the alternating current potential applied to the diode **60** as compared to the phase of the potential supplied by the source.

In order to energize the winding **30** on the half cycle of the alternating current potential source immediately following the energization of the winding **28**, the trigger circuit **40** includes a diode **74** and a capacitor **76** connected in shunt with the winding **28**. During the period of time in which the winding **28** is energized, the capacitor **76** becomes charged and a positive gate signal is applied through a resistance element **78** to a second gated unidirectional conduction device **80**, such as a silicon controlled rectifier. The resistance **78** serves to limit the current flowing to the gate electrode and to prolong the gating signal. During the half cycle of the alternating current potential source immediately following energization of the winding **28**, the controlled conduction device **80** is placed in a conductive condition by the gate signal applied by the triggering circuit **40**. Accordingly, for the duration of this half cycle the winding **30** is effectively connected across the input terminals **36** and **38**.

Since the energy stored in the storage capacitor **54** is sufficient to maintain the controlled conduction device **48** in a conductive condition for no longer than one full cycle of the potential supplied to the circuit, and since the silicon controlled rectifier **46** is placed in a non-conductive condition as soon as the potential on its anode swings negative relative to its cathode, the windings **28** and **30** are energized only once in response to each actuation of the switch **24**. When the switch is returned to its normal position, the contacts **44***b* open and the contacts **44***a* close. Thus the storage capacitor is disconnected from the anode of the silicon controlled switch **48** and is reconnected to its charging circuit. A high value resistance **82** is connected across the contacts of the switch **44** in order to keep the anode of the silicon controlled switch **48** from floating when the switch is in its illustrated normal condition.

From the above it can be seen that each time the tool **10** is operated, the windings **28** and **30** are sequentially energized during successive half cycles of the alternating current potential source and as a result a substantial amount of energy is imparted to the armature assembly **18** as it moves downwardly to drive a fastener **26**. In order to take advantage of this longer period of energization, it is necessary that the armature displacement, or

stroke, be made longer than the armature stroke in a half cycle tool such as that disclosed in the above identified U.S. Patent No. 3,179,866. However, in order to maintain the head portion **14** of the tool **10** of a compact size suitable for use in a portable tool, and in order to avoid the necessity of a long stroke for the work engaging member **20**, the work engaging member **20** and the magnetic member **22** of the armature assembly **18** are coupled for relative movement with respect to one another. As a result, the stroke of the work engaging member **20** is shorter than the stroke of the magnetic member **22**, and it is not necessary to provide structure for guiding the work engaging portion through a long stroke. In addition, the height of the head portion **14** is less than would be required if the magnetic portion **22** and work engaging portion **20** were fixed to one another. A further advantage is that when the winding structure is energized, the magnetic member **22** is accelerated independently of the work engaging member, and the initial inertia is reduced.

More specifically, referring now to FIGS. 1 and 2, the magnetic member **22** is formed entirely of magnetic material and includes an upper, generally cup-shaped portion **84** threaded onto a lower portion **86**. The upper portion **84** includes an axial recess **88**, and the lower portion includes a smaller axial recess **90**. A spring **92** is held in compression between the bobbin **32** and a flange **84***a* on the upper portion **84** for urging the entire armature assembly **18** toward its rest position, illustrated in FIG. 1.

In order to allow limited movement between the magnetic portion **22** and the work engaging portion **20**, the work engaging portion includes a shank member **94** slidably received in the axial recess **90**. The member **94** includes an enlarged head **94***a* held captive in the larger recess **88** of the upper portion **84** of the magnetic member **22**, and a lost motion connection is produced between the two parts of the armature assembly **18**. The relative movement between these parts is limited by the travel of the head **94***a* within the recess **88**.

The work engaging portion also includes a fastener driving blade **96** attached by a pin **98** to the shank member **94**. Suitable cushion members **100**, **102** and **104** are provided for cushioning impacts between the housing, the magnetic member **22** and the work engaging member **20**. A pin **106** extends downwardly from the top of the housing **12** for holding the work engaging portion **20** in its rest position.

When the coils **28** and **30** are energized, as described above, to drive the armature assembly **18** through a power stroke, the magnetic member **22** is accelerated through an initial part of its stroke without being hindered by the work engaging member **20**. The inertia to be overcome is less than if these two members were fixed together. The work engaging member **20** may be made of magnetic material, and if so, it also begins to move downwardly and may engage the fastener **26**. After the magnetic member **22** has moved through part of its stroke, it reaches or overtakes the work engaging member **20**, and forces it through a short fastener driving stroke, during which the fastener is first sheared, then driven. In FIG. 2 the armature assembly **18** is shown at the end of the power stroke.

After completion of the power stroke, the spring **92** returns the armature assembly **18** to its rest position. Advantageously, the magnetic portion **22** is lifted independently of the work engaging portion at the beginning of the return stroke. Accordingly, the magnetic portion attains ample velocity before the driver blade **96** is lifted. In addition, rebound of the magnetic portion **22** from the top of the housing **10** is not transferred to the driver blade **96**. Such rebound, if permitted, could partially drive the next fastener, and could result in a jam of two fasteners during the next power stroke.

Although the present invention has been described with reference to a single illustrative embodiment thereof, it should be understood that numerous other modifications

and embodiments can be devised by those skilled in the art that will fall within the spirit and scope of this invention.

What is claimed and desired to be secured by Letters Patent of the United States is:

1. An electric tool adapted to be energized by an alternating current potential source comprising a housing, winding means in said housing, an armature assembly mounted for movement adjacent the winding means, said winding means including a plurality of winding arranged along the path of movement of said armature assembly, and a control circuit for moving said armature assembly through a single power stroke and including means for energizing said windings on succeeding half cycles of the alternating current potential source and in a sequence corresponding to the direction of movement of said armature assembly in said power stroke.

2. An electric tool as claimed in claim **1** wherein said windings comprise first and second windings, and wherein said control circuit includes means for energizing the first winding, and includes means responsive to energization of the first winding for energizing the second winding immediately after energization of the first winding.

3. An electric tool as claimed in claim **2** wherein said control circuit comprises a first controlled conduction device adapted to be connected in series between the first winding and the potential source, means for applying a control signal to the first controlled conduction device to energize the first winding during one half cycle of the alternating current potential source, a second controlled conduction device adapted to be connected in series between the second winding and the potential source, and means responsive to energization of the first winding for applying a control signal to the second controlled conduction device to energize the second winding during the following half cycle of the alternating current potential source.

4. An electric tool as defined in claim **2** wherein said armature assembly includes a work engaging member, and a magnetic member movable from a rest position to an operating position during energization of said windings for driving said work engaging member through the power stroke, said magnetic member and said work engaging member being coupled for limited movement relative to each other so as to allow the magnetic member to move a distance from the rest position before driving the work engaging member.

5. An electric tool comprising a housing, winding means supported in said housing, a control circuit for energizing said winding means, and an armature assembly including a movably mounted work engaging member, and including a magnetic member movable from a rest position to an operating position for driving the work engaging member through a power stroke when said winding means is energized, said magnetic member and said work engaging member being coupled for limited movement relative to each other so as to allow the magnetic member to move a distance from the rest position before driving the work engaging member.

6. An electric tool as defined in claim **5** wherein said winding means includes an axial opening, said magnetic member being mounted for sliding movement through said opening upon energization of said winding means, and means defining a lost motion connection between said work engaging member and said magnetic member.

7. An electric tool as defined in claim **6** wherein said connection defining means includes a recess in said magnetic member, said work engaging member including a portion slidably received and held captive in said recess.

8. An electric tool as defined in claim **5** wherein said winding means includes a first winding disposed closest to the rest position of said magnetic member and a second winding disposed further from the rest position, and means for energizing said windings in sequence as said magnetic member moves from the rest to the operating position.

9. An electric tool as defined in claim **8** wherein said control circuit includes means for energizing said first winding, and means responsive to energization of said first winding for energizing said second winding.

10. In a portable electric fastener driving tool of the type adapted to be energized by an alternating current potential source and having an armature assembly movable through a single power stroke, the combination of first and second windings disposed along the path of movement of the armature assembly, means for energizing the first winding during a half cycle of the alternating current potential source, and means responsive to energization of the first winding for energizing the second winding during the immediately following half cycle of the alternating current potential source.

11. A control circuit for sequentially energizing a pair of loads by an undulating potential source comprising a first controlled conduction device adapted to be connected in series between the first load and the potential source, means for applying a control signal to the first controlled conduction device to energize the first load during an excursion of one polarity of the undulating potential source, a second controlled conduction device adapted to be connected in series between the second load and the potential source, and means responsive to energization of the first load for applying a control signal to the second controlled conduction device to energize the second load during an immediately subsequent excursion of a second polarity of the undulating potential source.

12. A control circuit as claimed in claim **11** wherein said second controlled conduction device includes output electrodes in series with said second load and includes a control electrode for establishing a conductive path between the output electrodes when a control signal is applied to the control electrode, and wherein said responsive means includes means in circuit with the first load for detecting energization of said first load, and means coupled between said detecting means and said control electrode for supplying a control signal to said control electrode after energization of said first load.

References Cited

UNITED STATES PATENTS

1,583,583	5/1926	Dominguez	310—30
3,047,789	7/1962	Lowry	323—22 X
3,122,690	2/1964	Dion et al.	318—132 X
3,141,171	7/1964	Doyle et al.	227—131 X
3,162,134	12/1964	Lovell	318—125 X
3,179,866	4/1965	Doyle et al.	318—125
3,215,916	11/1965	Hermann	318—125 X
3,267,337	8/1966	Doyle et al.	317—148.5
3,345,546	10/1967	Beltramo	318—132
3,347,441	10/1967	Doherty	227—131

MILTON O. HIRSHFIELD, *Primary Examiner.*

D. F. DUGGAN, *Assistant Examiner.*

U.S. Cl. X.R.

227—131; 307—252; 310—30, 35; 318—132