Sept. 24, 1968 E. E. RICHARDS 3,402,696

INDUSTRIAL PROCESS AND APPARATUS

Filed March 11, 1966 2 Sheets-Sheet 1

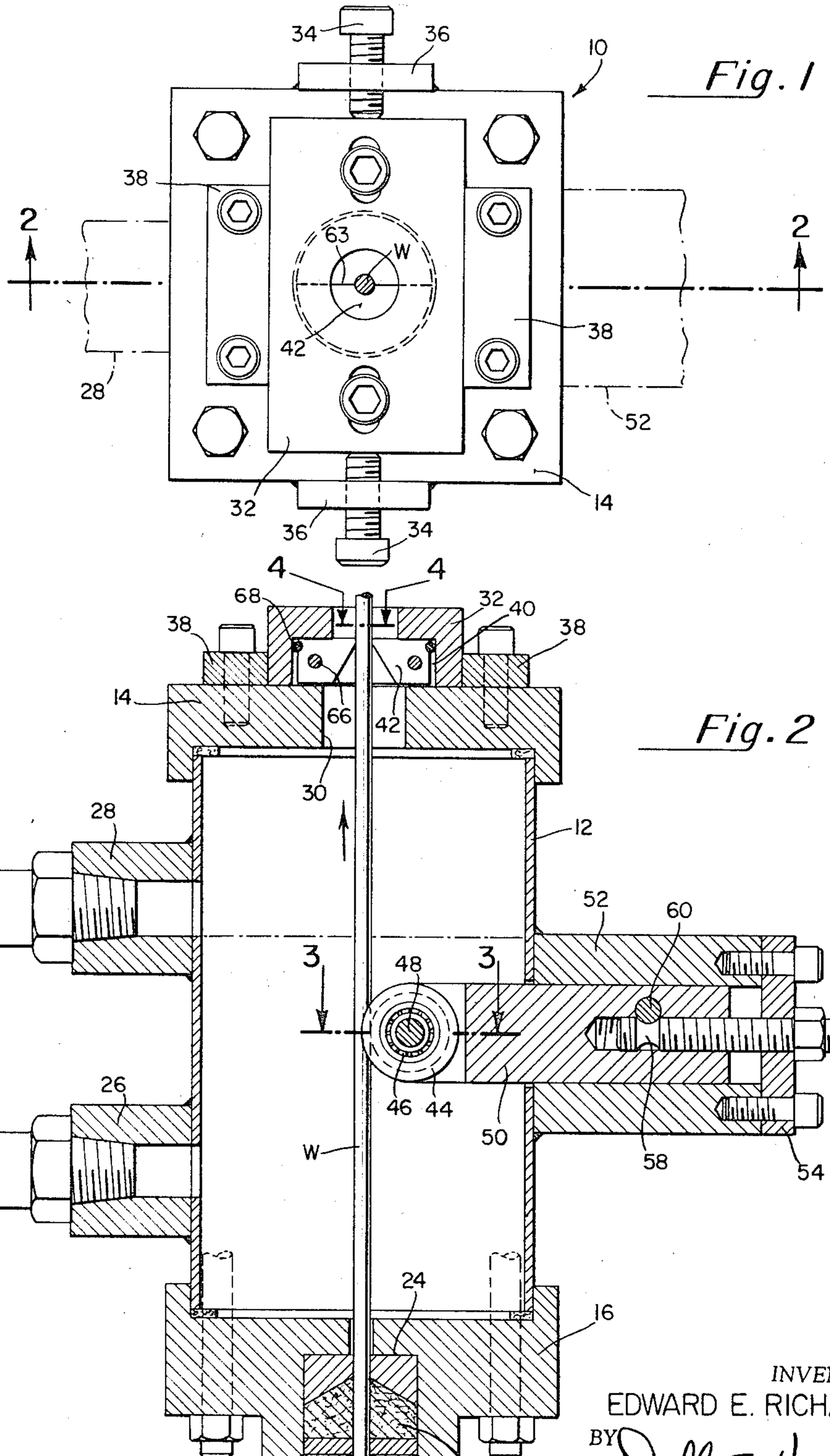

Fig. 1

Fig. 2

INVENTOR.
EDWARD E. RICHARDS
BY Dallett Hoopes
ATTORNEY

INDUSTRIAL PROCESS AND APPARATUS

Filed March 11, 1966 2 Sheets-Sheet 2

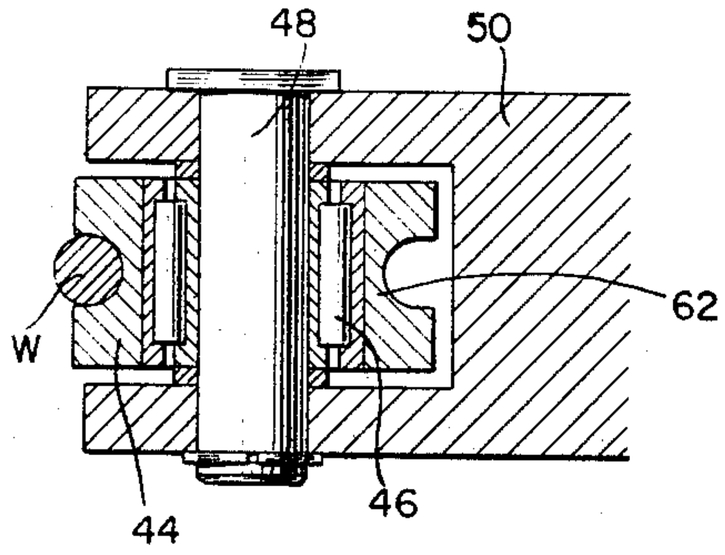

Fig. 3

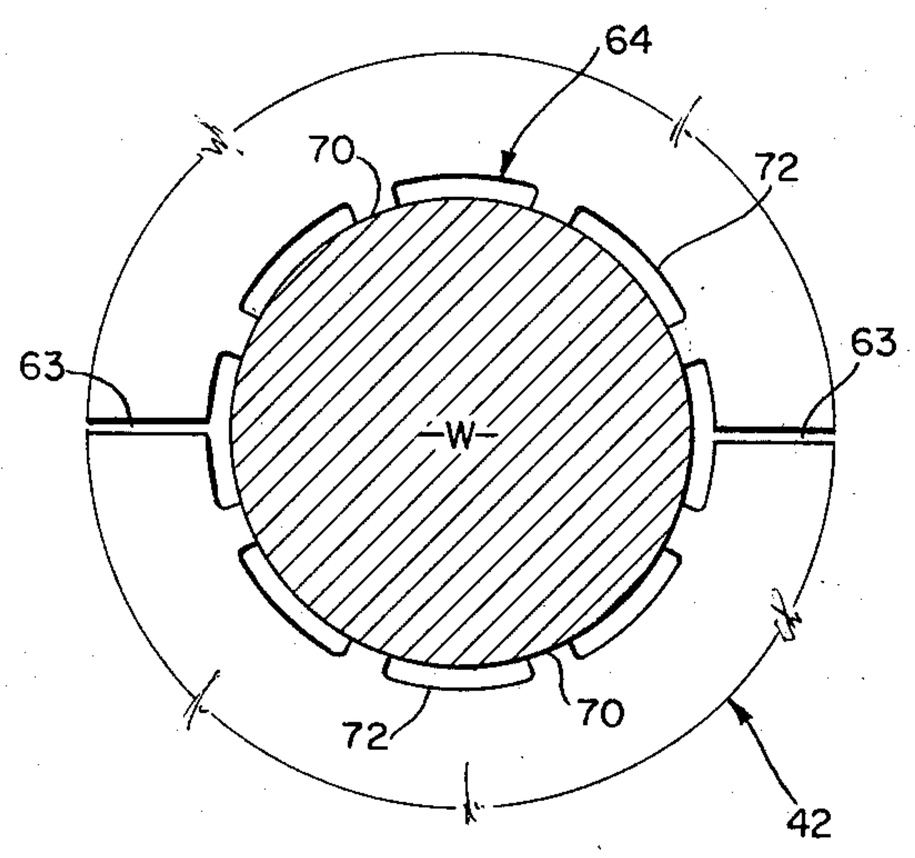

Fig. 4

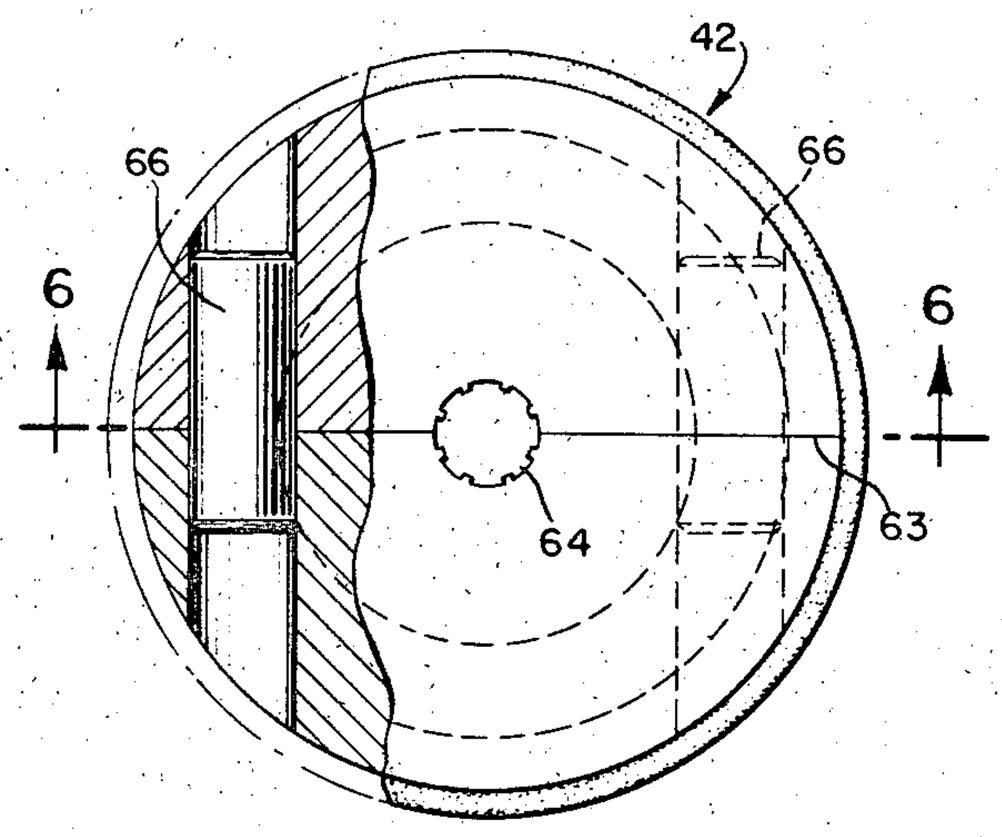

Fig. 5

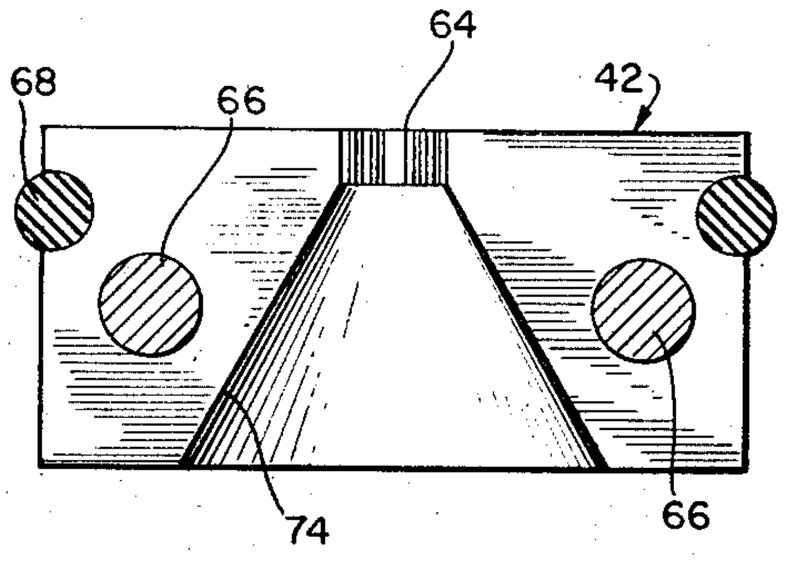

Fig. 6

INVENTOR.
EDWARD E. RICHARDS
BY Dallett Hoopes
ATTORNEY

United States Patent Office

3,402,696

Patented Sept. 24, 1968

3,402,696

INDUSTRIAL PROCESS AND APPARATUS

Edward E. Richards, Warminster, Pa., assignor to Pennsalt Chemicals Corporation, Philadelphia, Pa., a corporation of Pennsylvania

Filed Mar. 11, 1966, Ser. No. 533,596
10 Claims. (Cl. 118—125)

ABSTRACT OF THE DISCLOSURE

A wire coating die having split sections with a central orifice geometrically similar to and slightly smaller than the cross-section of the wire being coated. Flutes are circumferentially spaced about the orifice and have a perimetrical configuration whose periphery is also geometrically similar to the wire being coated and spaced therefrom by a substantially constant gap which determines the coating thickness independently of speed as the wire is axially fed through the die. The die is embraced by a resilient member so that land portions of the orifice continuously bear against the wire periphery.

This invention relates to wire coaters having means to apply an extremely thin coating of a plastic or other material for the purpose, for instance, of protecting the wire and/or beautifying the wire so that it may be used for floral displays, for welding wire, for hair pins, coat hangers and so on.

In the prior art it has been customary to dip wire into a pool of coating material and to then wipe the wire with a lambs wool wipe. Drawbacks have been inherent in this process: the process has been slow; invariably the coating has been streaked and too thick. Flexibility of the coating has been limited. The nature of the coating has impaired the attractiveness and effectiveness of the finished wire.

Under the present invention the wire after passing through a reservoir passes through a metering die. The die is serrated so that it contacts the wire only at spaced intervals. The troughs or valleys of the serrations leave a space of small dimension between the wire and the die permitting only a thin layer of coating material to escape through the die and remain on the wire.

Once the wire is past the die, the material on the wire spreads itself evenly about the entire circumference of the wire in an extremely thin wet film coating in the range of, for instance, .5 to 1.3 mils. The coating is thorough and flexible. At the same time remarkable speeds of application of the material to the wire are obtained—in the neighborhood of 250 ft./min., for instance. Such speeds are possible because the curing of such a thin coat of material may be accomplished quickly and effectively.

Other objects of the invention will be apparent to one skilled in the art from a review of the following specification including drawings, wherein:

FIGURE 1 is a view of the top plane of an apparatus embodying the invention;

FIGURE 2 is a sectional elevational view taken on the line **2**—**2** of FIGURE 1;

FIGURE 3 is an enlarged fragmentary view taken on the line **3**—**3** of FIGURE 2;

FIGURE 4 is an enlarged fragmentary view taken on the line **4**—**4** of FIGURE 2;

FIGURE 5 is an enlarged view, partly in section, from above, of a die embodying the invention; and

FIGURE 6 is a sectional view taken on the line **6**—**6** of FIGURE 5.

Briefly, the invention relates to a coating assembly including a cartridge and a rigid serrated die. The cartridge provides a sealed reservoir for the coating material, and

the die is split and is held in engagement with the wire which passes therethrough. The serrations of the die are extremely shallow to meter the coating material which passes therethrough with the result that afterward the coating material, still liquid, disperses itself about the entire circumference of the wire in an extremely thin coating.

In the preferred form the die is circumferentially split and the parts are biased together. Its opening measured across the peaks of the serrated opening when the parts of the die are together is slightly less than the diameter of the wire on which the device is used. In this fashion there is always assurance that the peaks will contact the wire and that the distance between the wire and the troughs will be no greater than a given distance.

Referring more specifically to the drawing, the wire coating assembly embodying the invention is designated generally **10** in FIGURE 1. As shown in FIGURE 2 it comprises a cartridge having a cylindrical shell **12** and a top wall **14** and a bottom wall **16**. The bottom wall is provided with a suitable packing gland **18** through which the wire W may pass without escape of coating fluid from within the cartridge. The gland comprises a fabric or other compressible sealing material **20** adapted to be compresesd by the threaded plug **22** which is threadedly received into an appropriate opening in the bottom wall **16**. The packing material **20** is compressed against a suitable abutment **24** in the bottom wall of the cartridge.

The cylindrical shell **12** is equipped with an inlet **26** and outlet **28** for a liquid coating material. This permits a circulation of the material by suitable pumping means, not shown, to maintain uniformity of the coating suspension, for instance, or to heat.

The top wall **14** of the cartridge is provided with a central enlarged opening **30** over which is disposed the die holder **32**. The die holder may be centered by set screws **34** threadedly received into ears **36** extending upwardly from the top wall **14**. Plates **38** are boltingly secured to the top wall **14** and provide support against lateral movement of the holder **32**. As shown, the holder **32** is provided with a central circular recess **40** which receives the die proper **42**.

The adjustment of the wire being coated laterally with respect to the die is accomplished by the idler wheel **44**. This is journaled in suitable bearings **46** (FIG. 1) on shaft **48** disposed in openings at the distal end of the bifurcated arm **50**. The arm is held at the opposite end in an opening in a boss **52** mounted on the cylindrical shell **12** and extending through an opening in the shell. The boss is closed by an end plate **54** which threadedly receives the adjustment screw **56** which as shown (FIG. 2) is grooved at **58** and held against a relative longitudinal movement with respect to the arm **50** by a pin **60**. As shown in FIGURE 3 the idler **44** is formed with a peripheral groove **62** which engages the wire W.

By means of the arrangement shown, adjustment of the wire within the die **42** is readily accomplished in the first direction by the adjustment of the set screws **34** and in the second direction by the adjustment of the adjusting screw **56**.

As shown in FIGURE 5 the die **42** is basically cylindrical. Its diameter is smaller than the diameter of the recess **40**. The die is split along a radial line **63**. Pins **66** are provided in appropriate openings (FIG. 5) to hold the two parts in a precise alignment. It will be understood that while the pins **66** fit snugly in their openings, the die may be disassembled by simply pulling it apart with a force along the axial direction of the pins facilitating interchanging dies without cutting the wire.

The die is biased in closely assembled position by means of an elastomeric O-ring **68** of neoprene or the

like resistant to the coating material. The opening in the die as measured across peaks **70** is slightly smaller in the completely assembled position than the diameter of the wire. For instance, if the wire is 12 gauge having a mean diameter of .1025 inch, the diameter measured across peaks is .1016 inch while the diameter measured across valleys is .1076. Hence the die is normally held slightly open by the wire itself working against the resilient of the O-ring. In this manner the peaks **70** are in continuous rubbing engagement with the wire. Further, as the diameter of the wire changes as it moves along the die may open or close slightly to accommodate such changes. This "breathing" of the die in response to changes in diameter of the wire for a given gauge eliminates excessive wear on the die and scouring of the wire.

In the preferred form the troughs **72** or valleys of the serration are shallow—in the range of 2 to 5 millimeters—and permit only a very small layer of coating material to pass through the die. Further, by having the recess **40** of greater diameter than the die **42** with the peripheral portion of the O-ring **68** engaging the peripheral wall of the opening **40**, there is a cushioned lateral support for the die so that it may adjust to some extent to aberrations in the movement of the wire. The O-ring, however, tends to return the die to a central position in the recess. This is called a "floating" arrangement for the die. To enhance this mobility of the die, clearance is provided between the bottom surface of the die and the top surface of top wall **14**.

As shown in FIGURE 6, the serrated opening **64** does not extend for the entire height of the die **42**. Instead, a conical portion **74** is provided at the opening to avoid interference of the lower portions of the die **42** with the wire.

In use the wire W is fed through the seal **18** up through the cartridge **10** and through opening **64** in the die **42**. The set screws **34** and adjusting screw **56** are set approximately. The liquid coating material is supplied through the inlet **26** and the wire is moved upward as shown in FIGURE 2. Coating material is wiped from the wire on the circumferential portions which underlie the projections **70**. A thin layer of coating material escapes through the troughs **72** of the serration. Once through the die, the coating material disperses itself by action of surface tension about the entire circumference of the wire W into a fine, thin coating which may then be cured by movement through an appropriate heated tunnel.

By virtue of the invention as claimed hereafter, extremely thin coating of material can be applied to a wire at an extremely rapid rate. The "floating" die permits slight lateral movements of the wire W, and variances in the diameter of the wire W are accommodated by the radial spread and contractions of the die sections. Because the coatings are thin they may be readily cured, and depending on the selection of the coating material can provide remarkable flexibility and corrosion resistance, as well as an attractive appearance.

"Wire" as used herein is intended to mean any elongate workpiece and can include pieces of cross-section other than cylindrical.

The present invention may be embodied in other specific forms without departing from the spirit or central attributes thereof and, accordingly, reference should be made to the appended claims rather than the foregoing specification as indicating the scope of the invention.

I claim:

1. A coating for wire comprising:

a diametrically split die member having an orifice therein geometrically similar to and slightly smaller than the cross-sectional periphery of the wire,

circumferentially spaced flutes in the wall portion of the orifice having a perimetrical configuration whose marginal periphery is geometrically similar to the cross-sectional periphery of the wire and spaced apart therefrom by a substantially constant predetermined distance, and

means for resiliently urging sections of the die member toward the axis of the wire so that the latter is continuously compressively engaged by land portions of the orifice.

2. The coating device of claim **1** wherein the wire circular in cross-section and said orifice is circular in configuration, the projection of the marginal periphery of said flutes being circular and concentric with the land portions of said orifice and said wire.

3. The coating device of claim **2** wherein said flutes are equally spaced circumferentially about the orifice.

4. The coating device of claim **3** wherein the periphery of said flutes is radially spaced from the periphery of the wire by a distance in the range of 2 to 5 millimeters.

5. The coating device of claim **1** wherein said resilient means comprises an elastomeric O-ring circumferentially embracing said die.

6. The coating device of claim **1** including a cartridge encapsulating liquid coating material therein, means for slidably supporting said die within a resiliently constrained dispositon at one end of said cartridge, means constituting a gland in said cartridge remote from said one end, and means for feeding wire through said gland means into said cartridge and into contact with the liquid coating material and then out through said die member orifice.

7. The coating device of claim **6** including means for adjustably positioning the wire within the center of the resiliently constrained disposition of said die member.

8. The coating device of claim **7** wherein said adjustable means includes a displaceable pulley.

9. The invention of claim **6** wherein said die member includes a tapered bore communicating with the orifice.

10. Apparatus for uniformly coating wire comprising:

a split die having a generally circular orifice centrally disposed therein and having a cross-sectional periphery slightly greater than the periphery of the wire,

spaced apart land portions radially extending into the center portion of the orifice and terminating at a position which is concentric with the orifice and slightly smaller than the wire diameter,

a conically tapered bore coaxial with and communicating with the orifice, and

resilient means urging said land portions into contact with the wire periphery,

whereby uniform thin liquid coatings may be applied to the wire independently of wire feed.

References Cited

UNITED STATES PATENTS

2,062,389	12/1936	Bleibler	118—125
2,393,678	1/1946	Graham	118—405
2,407,337	9/1946	Kolter.	
2,875,725	3/1959	Lit et al.	118—125
2,952,240	9/1960	Abbott	118—405
2,894,483	7/1959	Stahl	118—125 XR
3,018,755	1/1962	Metcalf	118—125
3,332,393	7/1967	Hoover	118—125

CHARLES A. WILLMUTH, *Primary Examiner.*

ROBERT I. SMITH, *Assistant Examiner.*